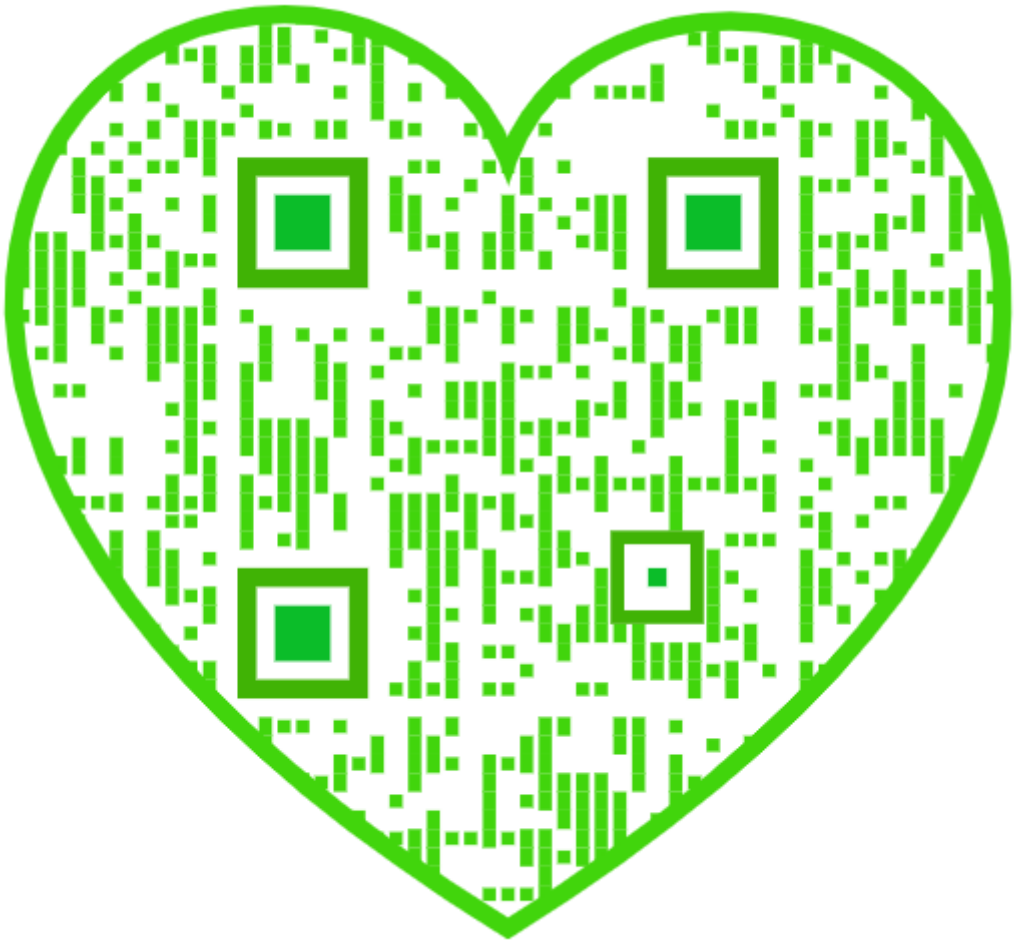

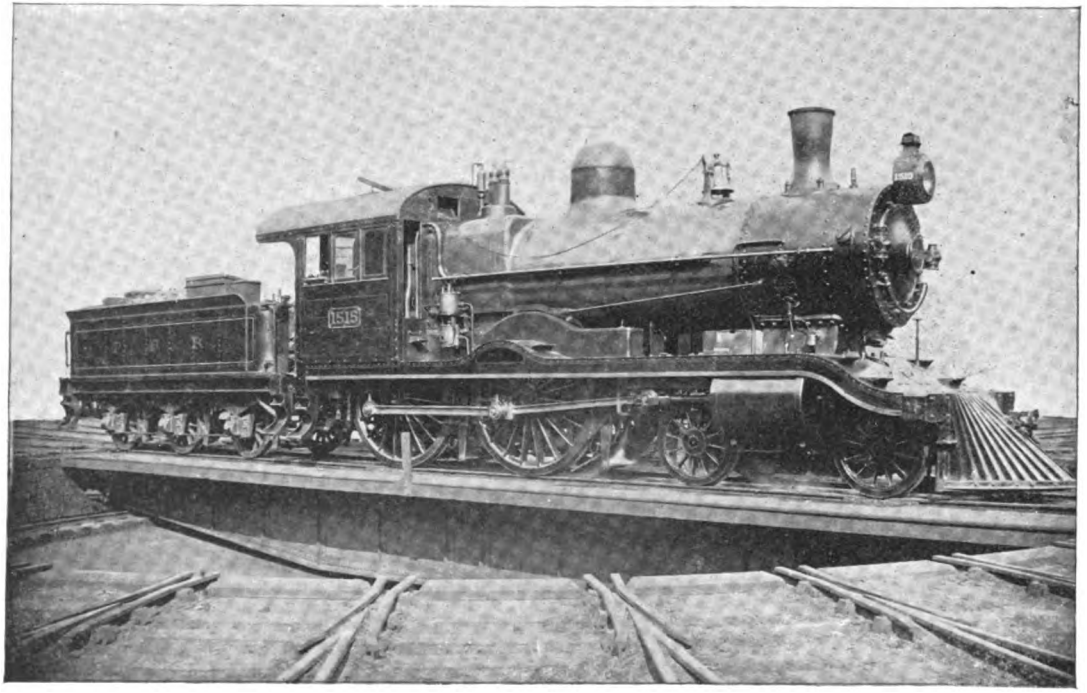

PENNA. R. R. TWO-CYLINDER COMPOUND, LINDNER SYSTEM.

Cylinders, H. P. 19½" × L. P. 31" × 28" stroke. Diameter of Drivers, 7 feet.
Diameter of Boiler, 60". Steam-pressure, 205 pounds.
Weight on Drivers, 90,000 pounds (about).

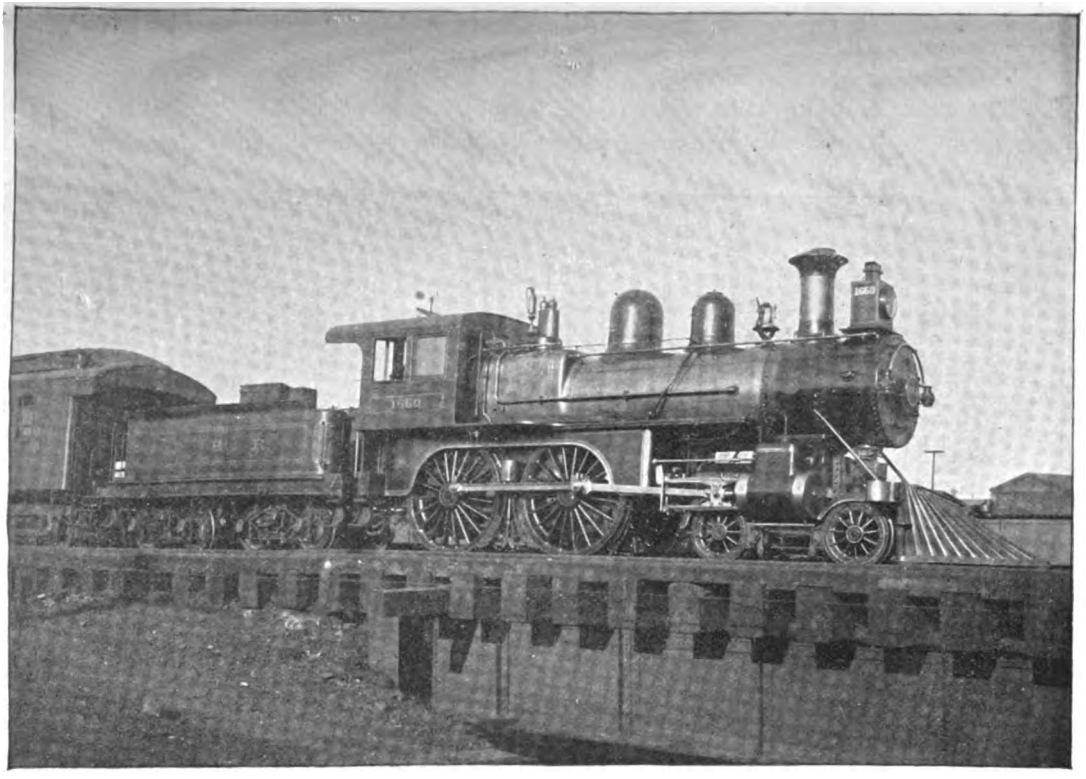

ENGINE FOR PENNSYLVANIA RAILROAD.

Diameter of Cylinders, 19½″ × 24″ stroke.
Boiler-pressure, 175 pounds.
Diameter of Drivers, 78″.
Weight on Drivers, 80,600 lbs.

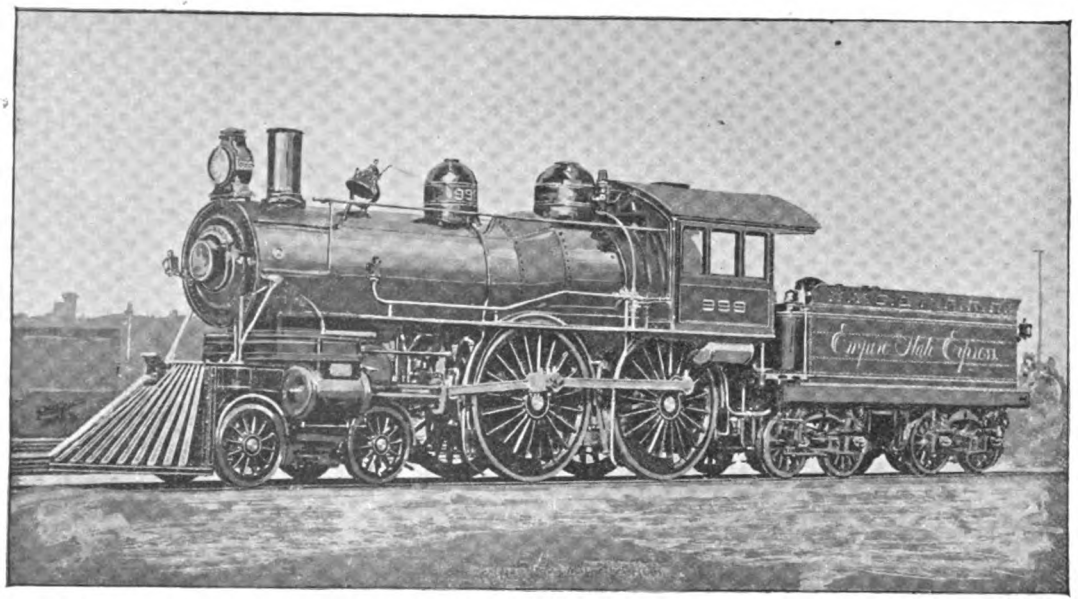

ENGINE 999, NEW YORK CENTRAL RAILROAD, 1893.

Diameter of Cylinders, 19″ × 24″ stroke. Diameter of Drivers, 87″.
Boiler-pressure, 180 pounds. Weight on Drivers, 82,200 pounds.
Speed, 102 miles per hour.

LOCOMOTIVES:

SIMPLE, COMPOUND, AND ELECTRIC.

BY

H. C. REAGAN,

Locomotive Engineer.

FIFTH EDITION, REVISED AND ENLARGED.

FIRST THOUSAND.

NEW YORK:

JOHN WILEY & SONS.

LONDON: CHAPMAN & HALL, LIMITED.

1907.

Copyright, 1898, 1902, 1907,
BY
JOHN WILEY & SONS.

ROBERT DRUMMOND, PRINTER, NEW YORK

114016
DEC 31 1907
TJD
·R22
L
·2

696029

THIS BOOK

IS RESPECTFULLY DEDICATED TO THOSE

Locomotive Engineers and Firemen

WHO ARE TRYING TO INCREASE THEIR KNOWLEDGE OF THE STEAM AND ELECTRIC POWER UNDER THEIR CONTROL, DECREASE THE CHANCE OF ACCIDENT, INCREASE THE SAFETY OF HUMAN LIVES, AND GIVE GREATER SATISFACTION TO THEIR EMPLOYERS,

BY

THEIR FRIEND THE AUTHOR,

WHO IS PRACTICALLY

ONE OF THEM.

PREFACE TO THE FIFTH EDITION.

THIS edition has been revised by the author to include the latest developments of steam and electric locomotives. The development of the steam locomotive includes the balanced four-cylinder compound and the steam superheater. The principle of compounding has been described in full as applied to locomotives both in the United States and foreign countries, involving the use of two-, three-, and four-cylinder engines. A chapter has been devoted to foreign-built compound engines, some types being described which are not modern, because they show the efforts put forth at their respective periods to improve the compound locomotive, and they form part of the evolution of the compound engine.

The rapid development of the electric locomotive, and its use on trunk-line operations, require the treatment of the construction and operation of the electric locomotive in great detail, together with the apparatus essential to the generating and transmitting of the current which operates the locomotive. The principles of the generating and translating apparatus and the method of application are explained. The systems of construction

and operation of the electric locomotive are described, to wit:

The single-phase system, using single-phase motors;
The polyphase system, using induction motors;
The three-phase system of generation and transmission, using rotary converters, with direct-current motors on the locomotive;
The three-wire, direct-current system and the simple direct-current system, using a trolley and ground return.

The methods of control and the electric brake-apparatus are described.

The author desires to acknowledge his indebtedness for cuts and descriptive matter relating to electric and steam locomotives to the various companies whose forms of apparatus are shown; also to *The Railroad Gazette*, *The Western Electrician*, *The Iron Age*, and *Cassier's Magazine* for data and cuts.

He hopes that this edition may be of benefit to the reader, and that it may have the same cordial reception as earlier editions.

H. C. REAGAN, E.E.

PREFACE.

THE author, who is a practical engineer, attempts in this book to write a practical treatise on the Locomotive Engine, and has tried to describe the manner in which the locomotive is handled while in service.

There are many excellent books on the locomotive, but there is one portion of the subject which, in the author's opinion, has not yet been covered.

The man who wishes to understand an engine thoroughly will learn more by watching repairs made in the shop, or in case of accident on the road, when the engine is disconnected, than if the method were described to him in so many words; for he thus sees the actual construction, break, and repairs.

The author has illustrated this book with this purpose in view, and has made most of the drawings himself.

Where others are used due credit is given, and therefore it may be truly said the drawings represent actual practice.

The text contains also a full explanation of the drawings, questions are asked and answered on the construction of the locomotive and its performances,

and complete directions are given as to what should be done in case of emergency.

The reasons for first explaining the construction and action and then asking and answering questions are three: first, when a question is asked and answered, and the reader does not thoroughly understand the construction and action of mechanism, the questions and answers will not be clear to him; second, the reader will be more vividly impressed by reviewing the questions and answers; third, the questions and answers are so arranged that the book can be used by Master Mechanics or Travelling Engineers for the examination of candidates for promotion, or by the demonstrator in the Lodge Room.

An effort has been made to present to the reader a full and clear explanation of the Compound Locomotive, showing the construction of different systems in actual use, and giving the method of disconnecting such engines when broken down.

The author has illustrated the principal "breakdowns" that happen to a locomotive, so that when one actually occurs on the road the engineer can compare the break with the illustrations in the book, and find out exactly what should be done.

Each part of the mechanism is named in the illustrations as a guide to the engineer in making out work reports.

I am indebted to the proprietors of the works whose Compound Locomotives are shown in this book, for drawings and photographs; to the Westinghouse and New York Air-brake companies, and other manufacturers whose appliances have been illustrated and de-

scribed; and to the *Railroad Gazette* for part of the description of the Brooks Two Cylinder and Schenectady Compounds.

If the book fulfils the mission for which it was written, the author will consider that his labor has been rewarded.

H. C. REAGAN,
Locomotive Engineer.

PHILADELPHIA, January, 1894.

CONTENTS.

CHAPTER I.

PAGE

THE LOCOMOTIVE BOILER 1

CHAPTER II.

FRONT END, OR SMOKE-ARCH 14

CHAPTER III.

STEAM-CYLINDERS AND CONNECTION 18

CHAPTER IV.

LOCOMOTIVE FRAMES, DRIVING-BOXES, AND SPRING RIGGING 35

CHAPTER V.

RODS AND CONNECTIONS 48

CHAPTER VI.

BREAKING OF RODS 58

CHAPTER VII.

VALVE-MOTION 63

CHAPTER VIII.

PAGE
VALVE-SETTING... 81

CHAPTER IX.

THE COMPOUND LOCOMOTIVE. 87

CHAPTER X.

INDICATOR-CARDS..... 98

CHAPTER XI.

DESCRIPTION OF VARIOUS SYSTEMS OF COMPOUND LOCOMOTIVES.. 102

CHAPTER XII.

RECENT AMERICAN COMPOUND LOCOMOTIVES. 227

CHAPTER XIII.

FOREIGN-BUILT COMPOUND LOCOMOTIVES..... 283

CHAPTER XIV.

SUPERHEATERS AS APPLIED TO LOCOMOTIVES..... 344

CHAPTER XV.

THE READING'S SINGLE-DRIVER LOCOMOTIVE—FOR THE ROYAL BLUE TRAINS..... 353
THE 1895 Class "L" EXPRESS ENGINES FOR THE PENNSYLVANIA R.R..... 357
MODERN FRENCH LOCOMOTIVE..... 361
INTERCEPTING-VALVE FOR COMPOUND ENGINES..... 365

CHAPTER XVI.

INJECTORS, SAFETY-VALVES, STEAM-GAUGES, ETC..... 371

CHAPTER XVII.

PAGE

BRAKES, AIR-PUMPS, VALVES, PUMP-GOVERNORS, AND WESTINGHOUSE BRAKES. 416

CHAPTER XVIII.

LOCOMOTIVE PACKINGS. 508

CHAPTER XIX.

TRACK-SANDING APPARATUS. 520

CHAPTER XX.

LOCOMOTIVE VALVE MECHANISM. 532

CHAPTER XXI.

LIQUID FUEL. 550
OIL-BURNING LOCOMOTIVES. 554
THE MODERN LOCOMOTIVE BOILER AND FIRE-BOX. 566

CHAPTER XXII.

GENERATING CURRENT FOR THE ELECTRIC LOCOMOTIVE. 585
ELECTRIC LOCOMOTIVES. 587

CHAPTER XXIII.

PRIME MOVERS USED FOR GENERATING ALTERNATING CURRENT. . 708

CHAPTER XXIV.

APPARATUS ESSENTIAL TO THE OPERATION OF AN ALTERNATING-CURRENT ELECTRIC LOCOMOTIVE. 712

CHAPTER XXV.

ELECTRIC LOCOMOTIVES OPERATING ON ALTERNATING-CURRENT SYSTEMS. 741

CHAPTER XXVI.

PAGE
ELECTRIC CONTROL SYSTEMS OF LOCOMOTIVES 817

CHAPTER XXVII.

NEW YORK, NEW HAVEN AND HARTFORD ELECTRIC LOCOMOTIVE —WESTINGHOUSE SYSTEM. OPERATING ON DIRECT AND ALTERNATING CURRENT 851

CHAPTER XXVIII.

AIR-BRAKES FOR ELECTRIC LOCOMOTIVES AND CARS 875

CHAPTER XXIX.

GASOLENE ELECTRIC LOCOMOTIVES 904
INDEX 919

LOCOMOTIVE MECHANISM AND ENGINEERING.

CHAPTER I.

THE LOCOMOTIVE BOILER.

THE best subject with which to start is the lomocotive boiler, of which there are two illustrations. Fig. 1 is a wagon-top boiler. Fig. 2 is a Belpaire boiler, which is now being used on many roads.

The principal difference between them is the shape of boiler over fire-box, and the method of staying. In the Belpaire boiler the back end over fire-box is nearly square, there being a radius on the corner for bending. The Belpaire boiler also uses radial stays, thus obviating the necessity of using crown-bars and sling-stays; which seems an advantage, as it not so complicated, and the mud cannot accumulate on the crown-sheet, as it does when using crown-bars. The sheets can adjust themselves to each other better under different pressures and change of temperature.

The principal parts of a boiler are the fire-box, flues, dome, steam or dry pipe, throttle-valve, the smoke-arch in which are the steam-pipes leading to each steam-chest, the exhaust-nozzles, and the stack.

That portion of boiler which is over the fire-box must be very strongly stayed with either crown-bars or radial stays. The Belpaire boiler is strengthened in the latter manner. This staying is necessary from the large area and the exposure to the hottest part of the fire.

The dome is for the purpose of providing a reservoir for dry steam and in it the throttle-valve is placed

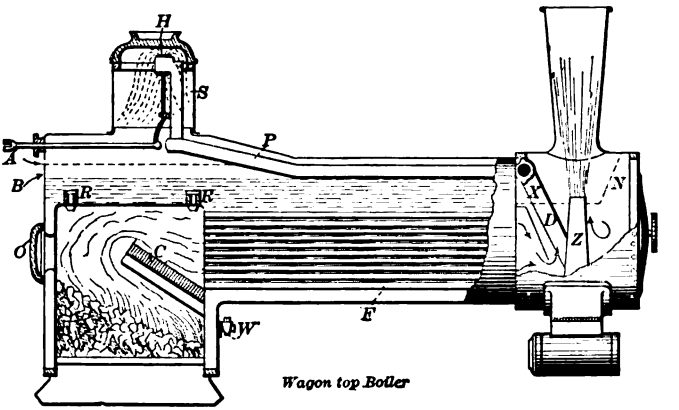

FIG. 1.

as high as possible above the water-line, to prevent entrained water from being carried over into cylinder, which is detrimental to the engine, and might cause a cylinder-head to be knocked out, if in large quantities.

The throttle-valve is a double disk (Fig. 3) having two seats in the steam-pipe. The disks are of nearly the same diameter, in order to balance.

The top disk is the larger, so that the throttle will stay closed, due to the greater pressure on top, hold-

ing valve down to seat. The difference in area, however, is not sufficient to make the throttle open with difficulty.

To the lower disk is attached a link *K*. This link is connected with a bell-crank lever *P*, which has its fulcrum on steam-pipe.

On the lower end of bell-crank lever is the throttle-rod *S*. To this on the outside of the boiler is the

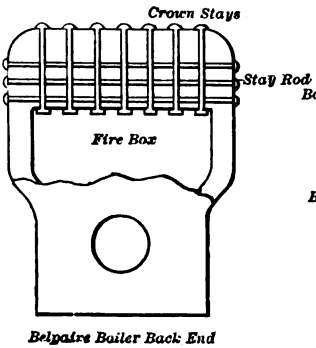

FIG. 2.

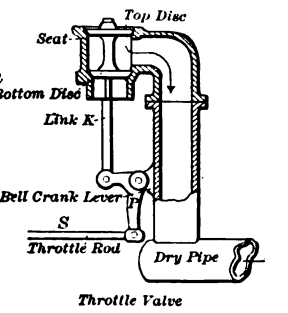

FIG. 3.

throttle-lever, which every ambitious fireman is anxious to control.

The dry pipe is put into a boiler to carry dry steam to the cylinders, the steam entering the pipe at throttle-valve in dome. If this was not provided, the boiler would prime.

One of the most important things that an engineer should understand is the action of water in a boiler, and the effect of heat and impurities in the water. It often causes the student or beginner to wonder at the change of the water-line in a boiler when using and not using steam from it.

It will be found that after the throttle is opened the water in the boiler has raised one gauge or more. This is caused by the release of pressure on water-line on the opening of the throttle. The water being in a state of ebullition, due to the intense heat from the fire, expands. Fig. 1 at letter *B* shows the water-line when the throttle is closed; *A*, or dotted line, shows water when the throttle is open and using steam.

Another cause of water rising in the boiler is due to impurities in the water, such as salt, oil, soap, and vegetable matter. These produce foaming, and frequently cause a boiler to be burned and an engineer to lose his position.

It is also important that an engineer should be able to detect at the earliest moment the beginning of foaming. The symptoms are as follows: On trying the gauge-cock it will be found that water is gaining very rapidly, notwithstanding the fact that he has not readjusted his injector, or changed the point of cut-off in his cylinder *s*. Also, if the engine is foaming very badly, water will appear at the stack, in a light lathery foam. If, then, the throttle is closed, the water will fall probably to the bottom gauge-cock, or below, and this is a dangerous action. Now if the water should fall below the bottom gauge, and the engineer is desirous of finding out where the water is, he should open the throttle suddenly or frequently by blowing the whistle, and if there is water near the bottom gauge-cock it will show. If water shows, the boiler should be filled up to top gauge, and the surface blow opened, keeping the injectors on while it is open, in order to keep the water-line up.

By doing this the water can be changed, and that which contains the impurities blown off.

It should be remembered that there is a difference between foaming and priming. Priming is caused by too much water in the boiler, or by a cracked, dry pipe, or by a dome of too small diameter.

When there is too much water in the boiler and the throttle is opened, the water is carried over with steam into the cylinder, as is shown in Fig. 1, in dome.

This is a very bad practice, and is far from economical. The water which is thus carried over contains heat, which is wasted, because this water which contains the heat does not expand to any considerable degree, and therefore does not give out any effective power, while it reduces the expansive force of the steam with which it mingles.

Remember, also, that dry steam is capable of doing more work than wet steam, and is therefore more economical, while with it there is less danger of breaking the engine down, or cutting valves and seats.

It is very important that all gauge-cocks should be kept open, and especially, under all circumstances, the bottom one.

When water-gauge glasses are used, the glass and valves should be open and free, for it is dangerous for them to be clogged up, as the glass will not then register correctly.

Water-gauge glasses are equipped with automatic-closing valves, so that when from any cause the glass is broken the steam and water will not escape into the cab, scalding the engineer and fireman; also prevent the loss of water and endangering the crown-sheet, if

broken when no one is around. The sketch at *A*, *A'* shows a very simple form of automatic valve. This valve will grind out any sediment that may collect on the seat. The grooves or wings are in the form of a spiral. By screwing the button or main valve towards the seat until the pin *C* extends through far enough to let the automatic valve come up against it, this forms an axis for valve *A*. By opening the pet-cock at bottom of glass, the steam will pass through the wings of automatic valves *A*, *A'*, causing them to revolve rapidly. Grind-seat and passage open the valve *B* wide when done grinding. Most all glasses have ball-valves which close automatically. Water in a gauge-glass should fluctuate freely with the water-line. If it does not do this, but stands motionless in the glass, the valves are clogged up and should be blown out. It is policy to do this before starting out, on each trip.

The fire-box needs very little explanation, as its purpose is evident to all; but most fire-boxes are equipped with brick arches, which improve combustion by maintaining the gases at an igniting temperature. This is due to the brick becoming incandescent, and also to the brick deflecting the cold air as it comes into the fire-door when open, and preventing it from rushing into the flues and chilling the gases. Fig. 1 shows the course of the gases to the smoke-box, and the appliances therein, as will be seen by referring to the drawing. *D* is the diaphragm, which serves the purpose of regulating the draught through flues and in fire-box. If the diaphragm was not used, the draught would be through the top flues, and burn out the back end of fire, especially in a long fire-box.

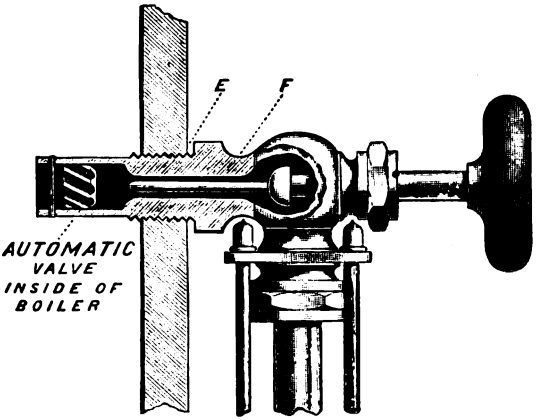

NO STEAM WILL ESCAPE IF BROKEN OFF AT
E OR F

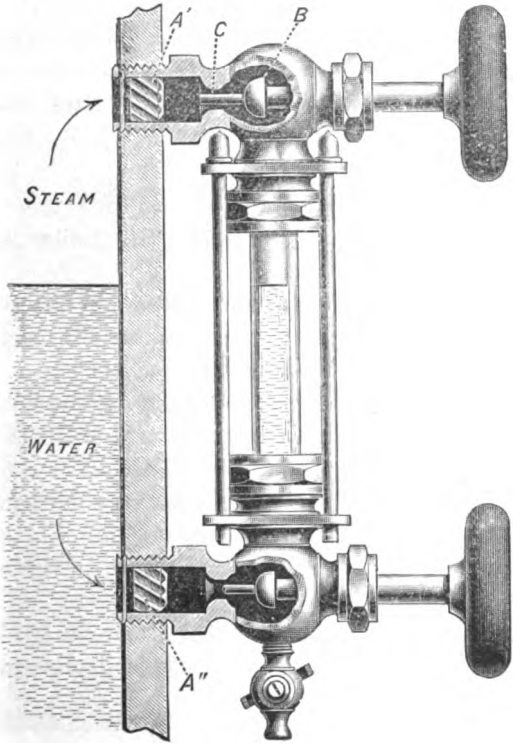

WATER GAUGE GLASS.

FIG. 4.

There is also used what is called a petticoat-pipe, to fill the purpose of a diaphragm. This is made separately, and can be raised and lowered to regulate the draught.

The exhaust-nozzles *Z* are the outlet of the exhaust-steam from cylinders, and create a vacuum in the front end or smoke-arch, which causes a draught on the fire by the air rushing through the gates and fire to fill up the vacuum in the front end.

Fig. 1 represents an extended smoke-arch. The extension is for the purpose of catching cinders and sparks. The cinders are prevented from getting out of the stack by netting, Fig. 1, *N*. This netting is extended across the smoke-arch, so that the sparks and cinders strike the netting and fall back into the extension.

QUESTIONS.

How does the steam get from the boiler to the steam-pipe?

Through the throttle-valve into steam or dry pipe, to steam-pipe in front end and steam-passage in saddle.

What is the form of the throttle-valve?

It is a double disk-valve, and nearly balanced.

Why is it nearly balanced, and which disk is the larger?

It is balanced in order to be easily opened, and the top disk is the larger.

For what purpose is the dome, and where is it placed?

The steam dome is the highest point on the boiler holding steam, and is so placed to hold dry steam.

Where is it placed?

In wagon-top boiler, over the fire-box, as in Fig. 1.

For what purpose is the steam-pipe in boiler?

To carry dry steam from dome to steam-chests.

What is a crown-bar?

A bar over the crown-sheet, with its end supported on the side sheet of fire-box.

For what purpose is it used?

To support the crown-sheet, as in Fig. 1.

What is the water-line in a boiler?

The line on the top of the water in boiler which varies with the height and level of water in the boiler.

What is the effect of low water in a boiler?

Low water is dangerous, and it is liable to burn the sheets or flues if the water is too low.

How is it known how much water there is in a boiler?

By trying the gauge-cocks.

What causes the water to rise when the throttle is open?

The pressure is released on the water-line, and the heat causes the water to expand.

What causes a boiler to foam?

Impurities in the water, such as oil, soap, salt, and vegetable matter.

How is it known when a boiler is foaming?

By the sudden increase of the water in the boiler. If it is foaming badly, it is also shown by the appearance of foamy water at stack.

If a boiler had four gauges of water when the throttle was open, how many would be in it when the throttle was closed?

If foaming badly, water would probably be found in the bottom gauge.

How could the water be found in the boiler if water dropped below the bottom gauge-cock?

By opening the throttle suddenly or by blowing the whistle.

Should more water be put in the boiler if water thus appeared?

It should.

What should be done to prevent water from foaming after finding it?

The injectors should be put on and the boiler filled up, then the surface-cock opened and the impure water blown out of the boiler.

What is a water-gauge glass?

A glass tube on the back of the boiler for indicating the level or amount of water in the boiler.

If the water-glass should break, what should be done?

All water-glasses are supposed to have automatic-closing valves, so that when a glass breaks the pressure will close them; but if they should not, it would be best to shut the hand-valves.

If an engineer is running along and he finds that the water in the glass does not fluctuate, what is supposed to be the matter?

That the valves are closed or clogged up.

What should be done to make the glass indicate correctly?

Open blow-off valve and blow the water out of the glass, and see that the steam and water valves are open.

What is priming in a boiler, and what causes it?

Priming is entrained water in the steam, and carried over into the cylinder. It is caused by too great a quantity in boiler, or too small steam space and dome. It may also be caused by working the engine too hard.

What effect has priming on the working of the engine?

It reduces the power of the engine, by reducing the expansive power of the steam with which it mingles; and is wasteful, because it carries off heat that does no work in the cylinder. It is also injurious to the valves and seat by destroying lubrication.

Which is the more powerful, dry or wet steam?

Dry steam.

ACCIDENTS TO BOILER AND ATTACHMENTS.

When a throttle-valve becomes disconnected and remains open, what should be done to get train under control?

The reverse-lever should be put in the centre notch of quadrant, the steam-pressure reduced, and the train controlled by the air-brakes.

When the whistle-valve is broken, what should be done?

The whistle-bell should be filled with waste or any material to prevent the whistle from sounding. The engine can be run in this manner. Calculation must be made for the extra amount of water blown away free in steam.

When the whistle-stem is broken off, what should be done?

In this case the fire must be put out, as the escape of steam would be too great; but care must be taken that the water must not leave the crown-sheet before the fire is out.

Could the injectors be put on to maintain the water in boiler while fire is being knocked out?

Yes, if put on immediately. Good judgment must be used in cases of this kind.

When a wreck occurs and the engine has studs pulled out, or boiler-check broken out, what should be done to prevent burning the boiler?

If possible to get at the engine, and escaping steam would not interfere, the fire should be covered with sand, sod, or anything to dampen the fire, and then water put on if procurable. Do not undertake to put water on first, as it will be liable to burn the person so doing, as the steam and gas will rush out the fire-door.

When a blow-off cock is cracked or broken off, what should be done, and should the injector be put on?

The fire should be gotten out of the box if possible. In regard to the injector being put on, it would depend on the size of opening and the amount of water in boiler, or if the fire could be gotten out before the water left the crown-sheet. If the injectors would put water in the boiler faster than it was escaping, it would be policy to put them on, or if water is on the crown-sheet.

In cases when the fire must be knocked out of fire-box, and the engine is standing where any live coals would set fire to the material underneath the engine, what should be done?

The ash-pan dampers must be closed. (This applies to bridges and trestles also.)

Is it possible to bulge or drop a crown without it being burned?

Yes, it is possible, and is due to poor material in the crown stay-bolts, or a pressure in excess of the strength of material. In a case of this kind the fire is put out on account of the water rushing into the fire-box. The same occurs when a flue bursts. In either case the engineer and fireman are in immediate danger.

When the throttle becomes disconnected and closes how can steam be gotten into the cylinders to move it?

By the tallow-pipe valve.

In case of a dry-pipe bursting, what should be done?

The reverse-lever should be put in the centre notch, and the steam-pressure reduced. Control the engine by the brakes. If wheels should slip, do not use sand, as there is a possibility of making a wreck of the engine.

CHAPTER II.

FRONT END, OR SMOKE-ARCH.

THE steam-pipes in smoke-arch are connected to the end of steam or dry-pipe, which is called bulkhead or tee pipe, and joined to steam-passage in saddle, as in Fig. 5. The pipes have ball-joints, so that they may contract or expand (Fig. 6) as they are subject to varying temperatures.

Some builders use a ball and flat-ring joint, forming a rotating and sliding joint. The steam-pipes are fastened to the saddle or bed-casting, on shoulders or joints on the saddle, by studs.

These studs become corroded in time, and are very difficult to get out, especially when the engine is warm. The reader will keep this in mind for future purpose.

The exhaust-pipes (Fig. 5) are the double exhaust-nozzle, or an exhaust-nozzle for each cylinder. The single exhaust-pipe is used on some roads with good results.

The engineer and fireman will frequently find that the engine, after steaming excellently for a while, will suddenly commence to steam poorly, and it puzzles them to understand it.

The difficulty is often found in the front end or smoke-arch, and is frequently caused by a loose exhaust-pipe, causing back draught and impairing the

vacuum in the front end. Sometimes the steam-pipe joints are leaking, which produces the same effect as a loose exhaust-pipe. Another cause is a loose dia-

FIG. 5.

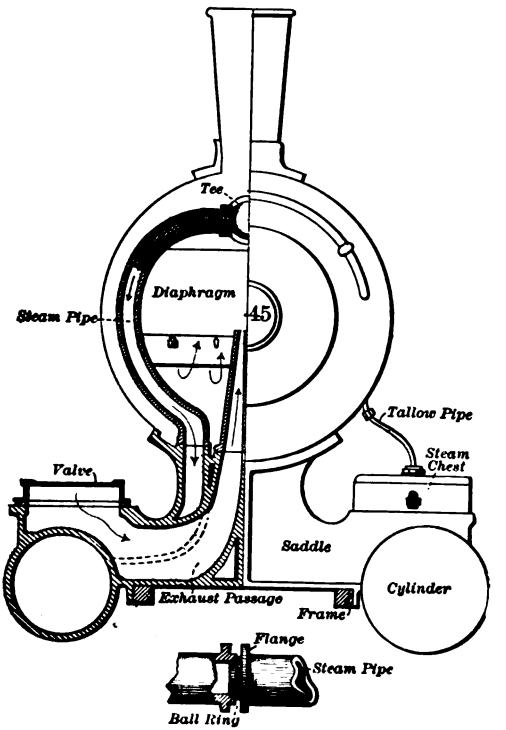

FIG. 6.

phragm, which, having dropped down, spoils the draught on the fire. Other defects are a loose thimble on the end of the exhaust-pipe, and cinder cap off of the hopper or side of the extension. Another great

misfortune is the burning or warping of the extension, which is caused by the extension being filled with live cinders, while there is an air-hole or crack, into which the air rushes and comes in contact with the so-called cinder (which is in reality good coke), which has been drawn through the flues from the fire-box. This causes an intense heat around the air-hole, and burns the iron. Sometimes it is caused by the front door and frame being cracked, or the clamps loosened, or the door partly opened. Care should be taken that these are tight, and also that the front end should be cleaned out when full, as it interferes with the draught by covering up the front end of flues. Do not, however, do this while running, as it will blow back among the machinery and produce a very bad effect, and cause the parts to be cut and run warm.

QUESTIONS.

How are the steam-pipes fastened to the dry or steam pipe in the front end?

By being bolted to the bulkhead or tee.

What provision is made for contraction and expansion?

The joints have ball rings having a round and flat face fitting between the joint of the two pipes, as in Fig. 6.

What is the effect if the steam-pipe or the exhaust-pipe leaks?

It destroys the draught, and causes the engine to steam poorly.

For what is a diaphragm used?

To regulate the draught on fire and through flues.

How is the draught regulated by the diaphragm?

By raising or lowering the movable portion.

What is the effect of an air-hole, cracks, or a door partly open, on an engine having an extension, when full of cinders?

Will burn front end, crack door-frame, and spoil the appearance of the engine.

CHAPTER III.

STEAM-CYLINDERS AND CONNECTION.

LOCOMOTIVE steam-cylinders are made from the best cylinder iron, which should be hard and free from blow-holes, but not too hard to be turned and bored out, and capable of having smooth cylinder walls in contact with the piston-head.

The cylinders are cast separately, in American practice, and bolted together, and are so constructed as to be neither rights nor lefts. There are three parts or names to a cylinder-casting, viz., cylinder, steam-chest, and saddle.

In the steam-chest, which is on the top of the cylinder, is the main steam-valve, which controls the inlet and outlet of the steam from the cylinder; and on the valve-seat proper, in most locomotives, is a loose or adjustable seat, capable of being renewed when worn out, without doing away with the cylinder.

Some engines have the seat cast with the cylinder, and when worn down have the false-seat attached.

In the steam-chest are five steam-ports, as will be seen in Fig. 7. 1 and 5 are the receiving-ports or openings of the steam-passages in the steam-chest. The steam-passage is divided. The passage or core, beginningat *B* in Fig. 7, passes down on the top of exhaust-

passage and branches on each side of the exhaust core or passage, the walls of exhaust-passage serving for both.

There seems to be a serious objection to this, from the fact of the difference in temperature of the steam in steam-passage and the exhaust-steam in the exhaust-passage, as it causes an unequal contraction and expansion, which often cracks the saddle, and also robs the steam of some degrees of heat.

FIG. 7.

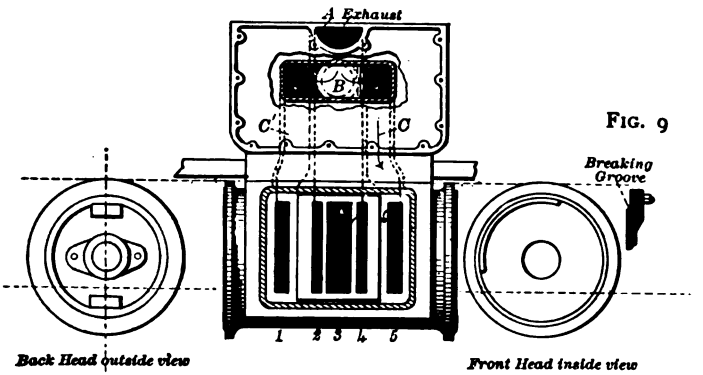

FIG. 8.

FIG. 9

FIG. 10.

Port 3 is the exhaust-port leading to the exhaust passages or core *A*, and leads the exhaust-steam from the cylinder to exhaust-pipe: so there are three passages or cores in the saddle.

Ports 2 and 4 are the steam-ports from steam-chest to cylinder, and through these ports all the steam passes that moves our trains over the roads. The steam passes out the same port after expanding and doing its work in the cylinder, which is governed by the valve.

Fig. 7 is a top view of the cylinder, valve-seat, and ports, also steam-chest and top of saddle. The flange on saddle has the same radius as smoke-arch, and is fastened to the same by bolts.

The cylinder is bolted fast to a frame, through a flange which is cast on the cylinder and the centre of frame. Also, there is a key or wedge on the sides of the saddle, to take up any lost motion of the saddles.

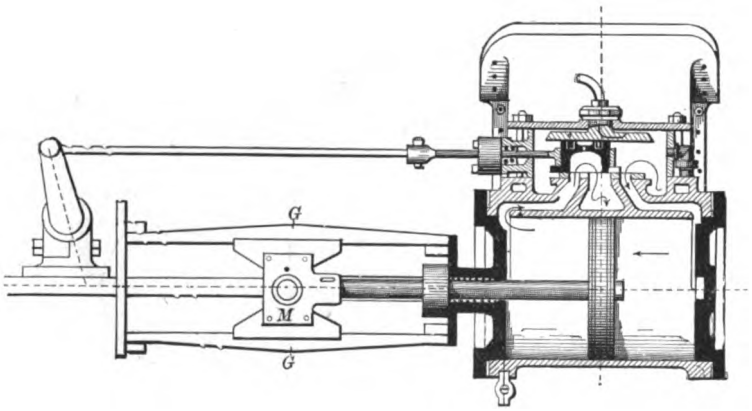

FIG. 11.

Fig. 11 is a longitudinal sectional view of a cylinder, piston-head, steam-ports, steam-chest, and valve. Fig. 7 shows only the top view of the steam-ports. Fig. 11 shows plainly how the steam-ports are. As will be seen, the core or ports are nearly a right and left angle, running from the seat into cylinders at each end. There is a shell or wall left between the bore of cylinder and port, of sufficient thickness for wear and reboring.

The exhaust-port is between the two steam-ports.

That portion of metal between the ports is called a bridge.

On the valve-seat, and working over these ports, is a steam-valve, which is a hollow shell having flanges around it, and is frequently called a D-valve, being of the shape of the letter D.

In most engines of the present day the valves are balanced as nearly as possible. The object is to take as much pressure off the back of the valve as possible, in order to reduce the amount of power required to move valve, and also to prevent the excessive wear of valve and seat, so as to be easily handled by the engineer.

The most common method of balancing is by putting bars on the back of valve, as in the Richardson valve, having a balance-plate fastened to steam-chest cover, as in Fig. 11.

The bars have under them in grooves on the back of valve springs which force the bars up against the plate, making a steam-tight joint, or nearly so, and thus reducing the area of valve which is exposed to the downward pressure of the steam.

There is a small hole in the centre of the valve, which releases the valve from any pressure that might be caused by steam getting past the bars. This hole opens into the exhaust cavity.

By referring to Fig. 11, you will see that the forward steam-port is wide open, and steam is passing into cylinder against the piston-head.

The exhaust-cavity of the valve is over the back of steam-port, and the exhaust-steam is passing out of the port into the cavity of the valve, into exhaust-port.

This action takes place for each end of the cylinder. The valve is encircled by a yoke, which has a stem passing out of steam-chest, through suitable packing.

The valve is free in yoke, so as to adjust itself to the wear.

The piston-head is an important factor in a locomotive, and without it we could not handle our trains as we do, as there is nothing yet constructed that can take the place of a piston-head, and with as little complication. What is essential in a locomotive is a smooth-working, steam-tight piston. The power of the engine principally depends on the area of the piston-head in square inches, as the larger the piston-head the greater the power of the steam-pressure.

The most common method of making a piston-head tight is by cutting grooves in head, and springing cast-iron rings into the grooves, whose diameter is larger than the bore of the cylinder; then when put in the rings are compressed, and fit tightly against the walls of the cylinder. But when the rings become worn, they spread open where they have been cut, and the steam blows through, which creates a loss of heat and power, which is not economical.

There are devices to prevent this, such as dowel-pins and lap-joints. Dowel-pins have a tendency to wear grooves in cylinder and let the steam blow through. Lap-joints or tongues break off and produce the same result. There is also danger of knocking out a cylinder-head and doing other damage by means of broken tongues.

A simple device, which has demonstrated itself to be a perfect remedy for this joint, and which is easily con-

structed, is shown in Fig. 12. It is called a break-joint block, and is in the form of a T, or a block having a tongue. This block is put in a groove back of ring groove of piston, and of the same depth and width. The tongue extends into ring groove, between ends of rings.

This block should be carried on the bottom of the cylinder.

The operation is as follows: The steam-pressure

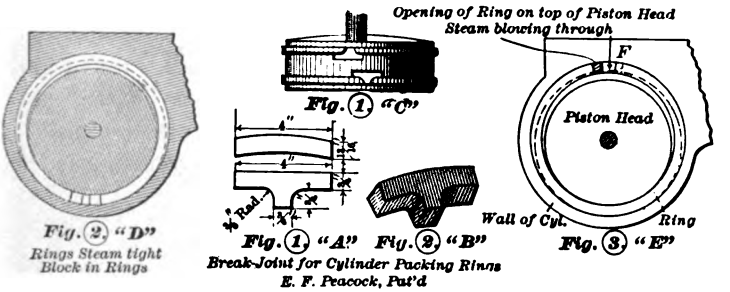

FIG. 12.

drives the ends of rings against the block, making it the same as a solid ring, and the tongue prevents the ends of ring from turning around on the top. The block wears with the rings, due to gravity. This device recommends itself on account of its simplicity and absence of springs or pins, and the results obtained from it after severe trials in all classes of locomotive service.

We have another method of packing, in which the piston-head is made in sections (Fig. 13). This packing requires to be set out by the engineer when worn.

The forward portion is called the spider. Between the arms are screw-studs, and on these are steel springs,

which bear against the wide or bull ring. On this ring are the two packing-rings, which are cut and bear out against the cylinder walls, due to the pressure of the springs on studs.

The front plate is called the follower-plate, and is bolted fast to the spider. This form of packing is more expensive than the spring ring, and has some defects, namely, that of being set out too tightly, which causes excessive friction and wear of cylinder, and also

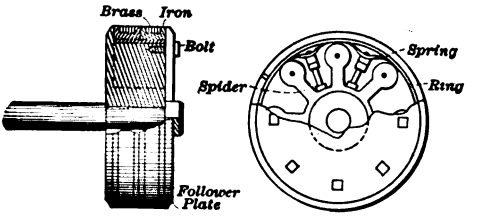

FIG. 13.

that the packing will sometimes fall and become follower-bound. Figs. 8 and 10 show the front and back cylinder-head.

As will be seen, there is a groove cut in head at *B* in order to prevent breaking off the face of the cylinder when a head is broken out. Attached to the piston-head is the piston-rod.

This rod passes through the stuffing-box in cylinder-head, and is fastened in the sleeve of cross-head. Fig. 11 shows the cross-head, which is of the vertical or two-bar type of cross-head, by some called the alligator cross-head.

This cross-head consists of three parts, the main body

(*M*), and the top and bottom shoe. This combination acts as a carrier for the back end of piston-rod. To the centre or wrist pin is attached the main rod, which is not shown in Fig. 11.

The shoes are made separate from the main portion of the cross-head, so that they can be taken off and relined or babbitted; and if a shoe breaks, it can be replaced without throwing away the whole head. This cross-head slides between the two guide-bars, as in *G G* in Fig. 11. These bars are fastened to the disks on stuffing-box, on the front end, and to a yoke at the back end. The most wear occurs on the top guide-bar and shoe.

Some of our students may wonder as to the cause of this wear on the top guide in forward motion, and why

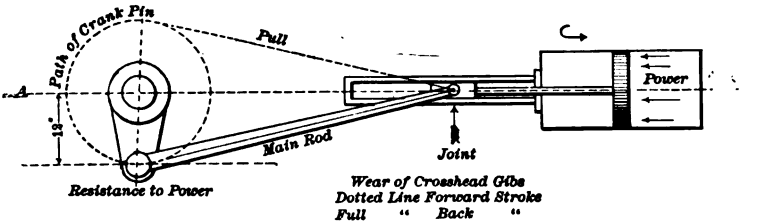

FIG. 14.

it is more on the bottom guide in the backward motion. It is caused in this manner: In taking the back stroke, the pressure against the piston-head is pushing back the crank-pin, which is on the bottom quarter, the resistance is at pin below the centre-line of motion, through the piston-head, and there being a joint between the power (piston-head) and the resistance (crank-pin) causes the cross-head to be pushed up against the guide-

bar, as in Fig. 14. In the forward stroke (forward motion) the cross-head is pulled up against the guide-bar, as in Fig. 14.

In the backward motion this is reversed, and the wear is greater on the bottom guide-bar. This should be thoroughly understood by an engineer, as it will frequently aid him when he breaks a cross-head or shoe.

There is the four-bar type or horizontal cross-head, to which these remarks also apply.

QUESTIONS.

How are the steam-cylinders made in American practice?

They are cast separately, and bolted together.

Name the three parts of a cylinder.

Cylinder, steam-chest, and saddle.

Are there right and left hand cylinders?

No, the cylinders are used for either side.

Why can this be done?

Because the ports are in the same position when used on either side and the exhaust and steam passages are in the centre of the saddle, and the cylinder heads fit on either end of cylinder.

How does the steam get from the steam-pipe to the steam-chest?

Through the steam passage or core in the saddle, as in Fig. 7, *B*, which shows the passage on each side of the exhaust-passage, and from there through receiving ports, shown by 1, 5.

How many ports in the steam-chest?

Five. Two receiving-ports, two steam-ports, and one exhaust-port.

For what purpose is the exhaust-port?

To let the steam that has expanded in the cylinder pass out into the exhaust-passage, as in Fig. 11.

For what purpose are the steam-ports?

Passages or ports to let the steam into cylinder from the steam-chest.

Does the steam pass out the same port that it goes in?

It does.

What is the metal between the ports called?

Bridges.

What controls the inlet and outlet of the steam from the cylinder?

A valve.

What is the shape of the valve?

It is in the form of the letter D, having a cavity in the centre, which is called the exhaust-cavity, as in Fig. 11.

On what does the valve slide?

On a seat.

What is a balanced valve?

A valve having almost all the pressure taken off the back.

How is this done?

The most common method is by putting strips or bars in grooves on the back of the valve, and having a plate above the valve fastened to steam-chest cover, against which the bars slide, making a steam-tight joint, or nearly so, and thus reducing the area of valve which

is subject to the downward pressure of the steam. (See Fig. 11.)

What provision is made for the steam that might leak past the bars?

A hole is bored through the top of the valve into the exhaust-cavity, thus taking off any pressure that might accumulate.

What is the advantage of a balanced valve?

It reduces the friction and wear of valve on seat, and requires less power to move the valve, and makes the reverse-lever easy to handle.

What surrounds the valve?

A yoke having stem passing out through stuffing box (Fig. 11).

What and where is the piston-head?

It is a round disk, against which the steam exerts its pressure. It slides in the cylinder.

How is the power of an engine increased with a given steam-pressure.

By increasing the size of the piston-head.

How is a piston-head made tight?

Most piston-heads have cast-iron spring rings fitted in grooves in head, which spring out against the cylinder walls.

Do they ever leak?

They frequently leak when worn where cut, if nothing has been provided to stop the leak.

What is the result if they leak?

Loss of power and waste of force, as the live steam blows out the stack.

Can they be made steam-tight without complication?

They can. (See Fig. 12.)

What is the use of the cross-head, and what is attached to it?

It acts as a carrier for back end of piston-rod and also for front end of main rod. The piston-rod and main rod are attached to it.

Between what does it slide?

Between the guide-bars.

Which guide is more worn in the forward motion?

The top guide-bar.

Why is this?

When on back stroke the crank-pin is below the centre-line of motion, and the push of the piston drives the cross-head against top guide; on the forward stroke the crank-pin is above the centre-line of motion and the pull of piston draws cross-head against top guide-bar, the joint being at the wrist-pin in both cases, when running backward the wear is greater on bottom guide-bar. (See Fig. 14.)

Explain the course of the steam in Fig. 11 by the arrows.

As shown, the forward port is fully open, and steam is passing in the front end of the cylinder against piston-head. The steam from back end of cylinder is passing out port under valve, into exhaust-port.

Breaking-down will next take our attention; and as it is essential that the engineer or fireman should thoroughly understand the construction and principle of his machine, we have endeavored to make it clear so far as we have gone. He should also understand how to disconnect his engine when broken down, and how to clear the road.

There is one point the reader will do well to re-

member, that whenever a breakdown occurs which requires the cylinder on the broken side to be run without steam in it, the piston-head must be without motion, or disconnected, and the steam-ports to be covered in all cases except in towing, as a dead engine.

The writer will try and illustrate the method of disconnecting, so as to make it plainer to the student; and he holds the theory that an illustration of the break and repair can be remembered for a longer time than if told in so many words.

QUESTIONS ON BREAKDOWN AND DISCONNECTING.

When a cylinder-head is knocked out by a broken piston-rod, what should be done?

If the piston-head went clear of cylinder without breaking anything but the head, the best plan is to place valve in the centre of seat and clamp valve-stem. If there were no clamp at command, tie valve-rod up to hand-railing with a rope. In all cases disconnect valve-rod from upper rocker-arm, but do not take down the main rod. Position of valve is illustrated by Fig. 15.

What must be done if a valve-rod breaks?

Do the same as in the breaking of a cylinder-head, except that in this case the main rod must be disconnected from the cross-head. This is shown in Fig. 15.

Why must the main rod be disconnected in this case, and not in breaking out the head, the piston going out to clear?

Because in that case there was no piston in cylinder to cut, and in the other there is; so the main rod must be taken down to prevent cutting the cylinder.

If you were near a siding, would you disconnect the main rod on broken side?

Not unless the distance were very great. It is better to clear the main line as soon as possible.

In what position should a cross-head be blocked?

In the back end of guides. (See Fig. 15.)

Why should it be blocked in the back end of guides?

Because when blocked in the front end, if the steam

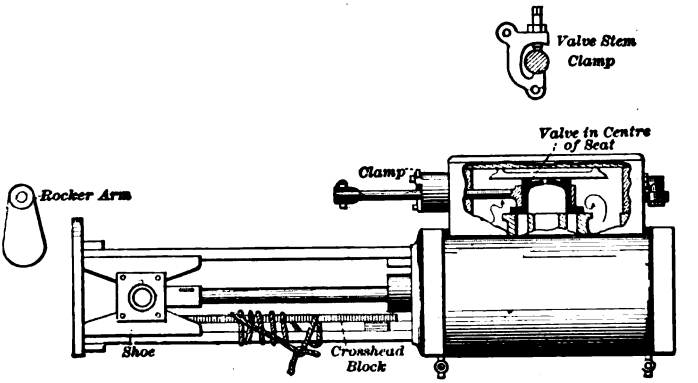

FIG. 15.

should get in front of the piston-head, and blocking should slip or break, it would be likely to knock out backhead, bend the guide-bars and yoke, and also injure the packing. If blocked back, it would knock out front head only.

Why would it not break out backhead?

Because the piston-head would strike the front head, and the force of the blow would be reduced before the cross-head would strike the backhead. This is the case where the main rod breaks.

When a valve-stem breaks, what must be done?

Clamp valve-stem, having the valve covering the ports. Take down main rod, block cross-head, and disconnect valve-rod from rocker-arm, as in Fig. 15. This applies to broken valve-rod.

How can a broken valve-yoke be found without taking off steam-chest cover?

Place the engine on a quarter on the side supposed to be broken, open cylinder-cocks, give the cylinder a little steam, and pull reverse-lever back and forth. If

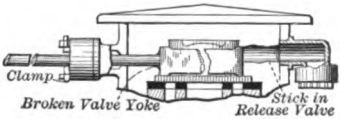

FIG. 16.

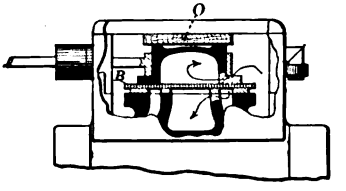

Broken Valve or Bridge
B—Board between Valve and Seat
O

FIG. 17.

steam comes out of cylinder-cock only, it would show that the break was on that side.

Why should the engine be put on a quarter?

In order to have a full travel of valve over seat.

After finding broken yoke, how should the engine be disconnected?

In the same way as in the case of broken valve-rod, except that in this case the release-valve should be taken out. Cut a stick and put in release-valve * nut, with the stick against steam-valve so as to hold valve central over ports, as in illustration, Fig. 16.

* Also called *relief-valve.*

What should be done in the case of a broken valve or bridge?

Put a board over the valve-seat, put valve on it, bolt steam-chest cover down on it. This is in an engine where a balance-valve is not used, as in Fig. 17.*

If both cylinder-heads broke out, would it be possible to run the engine?

Yes, by blocking up the front steam-ports, and running with the back-ports.

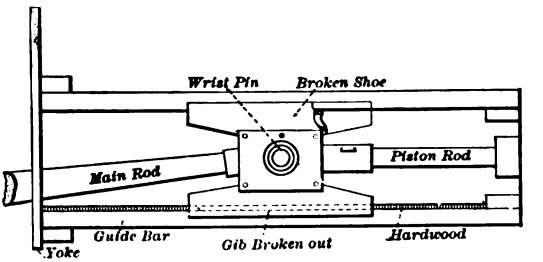

FIG. 19.

When a release-valve blows out, what must be done?

Put a wooden plug in the hole, if thread is not stripped.

If a piece broke out of steam-chest, how could steam be prevented from entering the steam-chest?

By putting a blind-washer in steam-pipe joint.

Could this be done very easily?

It could not, on account of the heat from the fire; and in most cases where the engine has run for any length of time the studs are corroded, and hard to get loosened.

When a cross-head shoe is broken, what should be done?

* A block of wood can be substituted for the valve when balance-plate is used.

If not broken too badly, and especially the bottom one, the engine can be run. If the top one is broken, however, it must not be over half gone. When running forward also in case a gib breaks out entirely, a board of the thickness of the gib should be put on the guide-bar. (See Fig. 19.)

Remember that you should always block the valve in centre of the seat. Cover the ports. Do not shove valve ahead or back, leaving one port open. This is a bad practice.

CHAPTER IV.

LOCOMOTIVE FRAMES, DRIVING-BOXES, AND SPRING RIGGING.

LOCOMOTIVE frames, as used in American practice, are of the bar type. On most foreign roads they use the slab and compound frame. The bar frame seems best adapted to our locomotives.

The frame is a very important part of an engine, as it must take all the thrust due to the push and pull of the piston, and the resistance in the weight of the train behind. It also keeps the driving-wheels in their respective places, carries the boiler, cylinder, and all the machinery connected with the boiler.

This in turn is carried by the driving-axles, so it is plain that the locomotive frame must be well made.

The construction of the bar type is as follows: In an eight-wheel or passenger engine, as shown in Fig. 20, it is composed of two parts—the back portion, which contains the pedestals or jaws for the driving-boxes, and the forward portion, which carries the cylinders and rocker-arms and tumbling-shaft.

As will be seen in Fig. 20, the top rail of back part of frame is dropped behind the front driving-box. This is for the purpose of getting a deep fire-box or slope in the front end. In this form of frame the fire-box is above the frame, thus getting a wider fire-

box than could be done if the fire-box was between the frames.

The pedestal-jaws or frame-legs are forged to the top and bottom rails, thus binding the two rails together. In some engines they are forged only to the top rail, and the bottom rail is bolted to jaws. Fig. 20 shows solid frame.

The forward portion or bar has a T head and the

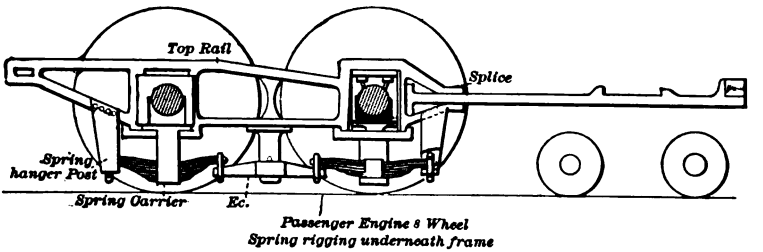

FIG. 20.

bar is between the two rails of the back part, which are drawn together, binding the forward part.

The T head or bar is bolted to jaw, and the whole is called the splice. On the forward part of bar are two shoulders, between which the saddles are bolted.

There is a key at this point to take up any movement of cylinder. At the extreme end comes the breast-beam, to which is bolted the pilot.

Fig. 21 shows a consolidation engine for heavy freight service. As will be seen, there is no splice in this frame, and there are four pedestal-jaws.

In this engine all but a small portion of the entire weight of the engine is carried on the driving-wheels.

The forward end of the frame is brought together in order to clear the pony-wheel.

On the bottom of pedestal-jaws are bars or binders, which are bolted to the bottom of jaws, and are usually called pedestal-caps. These are for the purpose of making it possible to take out the driving-boxes, or dropping out wheels, which could not be done if they were solid, unless the end of axle and wheel were loose. They also serve to bind the jaws together.

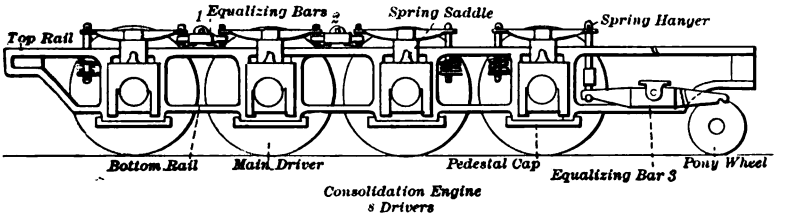

FIG. 21.

The number of jaws and style of frame is governed mostly by the number of driving-wheels.

In order to make an engine ride easily and reduce the shocks and concussion on the running gear, the engine is provided with springs which are called driving-springs and engine-truck springs.

The driving-springs are placed over each driving-box and carried on a saddle which straddles the frame, resting on the top of the driving-box in the most common form of construction, as in Fig. 21, which shows the construction very plainly.

Fig. 20 shows a different method of placing the springs. In this form the spring rigging is underneath the frame. By referring to Fig. 20 you will see that

the springs are supported by carriers whose upper ends have an eye in them, and a pin runs through the flanges of driving-boxes and the eye of carrier, thus making a support for the driving-spring.

The driving-box takes the weight, as in other forms. In order to equalize the weight between the drivers, there are provided bars, which are called equalizing-bars. These are placed between the drivers, on the top of the frame, in the form using springs on top, as in Fig. 22. Fastened to the frame are fulcrum-posts. The

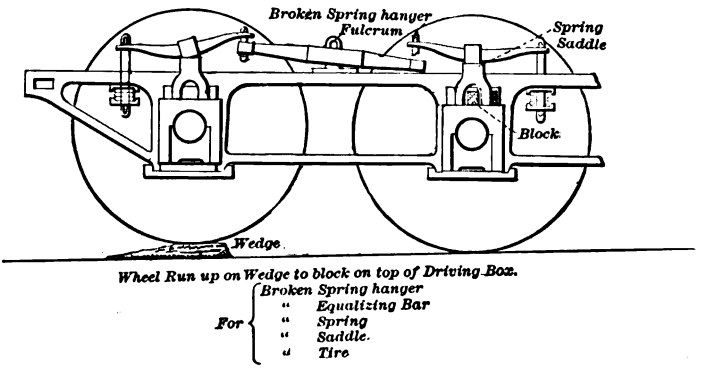

FIG. 22.

bar has an eye in it into which the post fits. Passing through the post is a pin, forming the fulcrum or axis on which the bar rotates.

The ends of the bar are attached to the springs by a spring hanger. If equalizing-bars were not used, the weight would not be distributed evenly on the drivers, for an illustration, if we should place the frames down on the top of the boxes, and run over an uneven piece of track, the weight would be taken one time by one

driving-box and then by the other. This is from the fact that the one in the hollow place would drop away from the frame and leave all the weight on the one on the highest part of the rail, and this action would take place also when the other wheel dropped into the hollow or low place.

This happens when passing over switches; but in using the equalizing-bar, whose ends are fastened to the springs over each driving-box, and having an axis around which it can rotate, the weight being concentrated at that point, either of the drivers can go up or down, but the weight will be carried by both driving-boxes, because the bar can adjust itself to the movement of the boxes on either side of the axis.

In Fig. 20 the equalizing-bar is underneath the frame, for the purpose of getting the fire-box on top of the frame.

In Fig. 21 you will see that three pairs of drivers are equalized together, but the front pair is connected to the pony-truck by equalizing-bar, thus equalizing front driver and truck.

There are coil springs on the end of spring hangers. The forward equalizing-bar is bolted to the under side of the saddles or bed-casting.

Driving-boxes are generally made with a shell of brass, but in most modern locomotives the driving-box is cast solid, of some good composition, such as phosphor bronze.

The advantage of a cast-steel box with a shell over a solid box is that the shell can be renewed without disposing of the whole box, as is done when a solid box wear out.

Driving-boxes are set in the frames or pedestal-jaws, and between them and the jaws are two pieces of metal, front and back. That in the front is called the shoe, and it is perfectly straight. The one back is called the wedge, and is tapered; the jaw is also tapered. This is done for the purpose of taking up the wear due to the push and pull of the piston. The wedge must

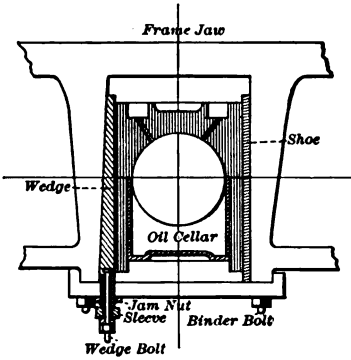

FIG. 23.

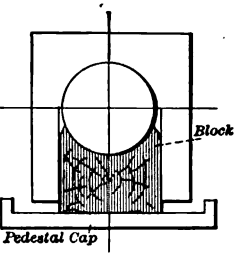

FIG. 24.

not be too tight or the frame cannot oscillate up and down; or if the driving-box becomes a little warm, the wedge and frame will stick, which causes the engine to ride very hard on the driving-boxes. As will be seen by Fig. 23, the wedge has an arrangement at the bottom to adjust it, which is called a wedge-bolt. The one shown is the standard on the P. R. R.

There is a hollow bolt having a head on the lower end, and the body threaded its entire length. The pedestal-cap or binder is also threaded. This hollow bolt screws into the cap and abuts against the bottom of the wedge. In the centre of this hollow bolt is the

wedge-bolt proper, the upper end of which has a head which fits into the wedge. On the lower end are two nuts for jamming to hollow bolt. To set the wedge up you first unscrew the nuts on wedge-bolt proper, then screw the hollow bolt up; this carries the wedge with it. When raised far enough, screw the nuts up on the wedge-bolt against the end of hollow bolt. This binds the wedge fast to the hollow bolt, using a jamb-nut on the hollow bolt to bind it to the pedestal-cap.

To lower, do as in raising, except to draw the hollow

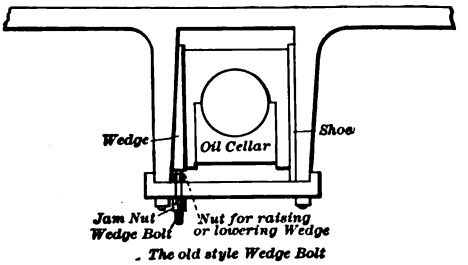

FIG. 25.

bolt down, and screw up nuts against hollow nut, and that will draw the wedge down on the top of hollow bolt.

To keep the driving-boxes thoroughly lubricated, there is an oil-cellar fastened between the flanges of the driving-box, which is hollow, and fits closely to the axle. This is filled full of waste suitable for packing cellars, and well oiled or sponged up.

The tops of driving-boxes have oil cavities with oil-holes leading to journal. Sponging is put into the cavities in the top. The cellar catches the oil that passes around the journal and underneath it. The

sponging must bear against the under side of the journal, or the box will become hot and give trouble. When the sponging becomes hard, due to being burned, it should be taken out and fresh sponging put in, as when hard it drops away from journal, and the capillary action is also stopped.

Setting up wedges is something that should be understood by all engineers. The proper position to place an engine is on a straight, level piece of track; then place the crank pins on the side you are working at on the top quarter, in the forward stroke, put a chock under wheels, and give the cylinder a little steam. The idea of this is to take up all the lost motion between the driving-box and shoe, for in this position the piston pulls box to shoe, and the cylinder-head pushes frame against box, leaving the wedge free. The engineer must use his own judgment as to how far the wedge must go up. To use finer adjustment, you must slack up the keys on the rods, and key up after setting up wedges. (See Fig. 26).

Breaking down any portion of spring rigging sometimes presents a difficult problem, as all engines are supposed to carry jacks, but do not do so. Then the question of how to raise the weight is solved by using a wedge of wood or iron, as in Fig. 22, which shows a broken spring hanger which has let the frame down on the driver, and the end of equalizer down on the frame. The best thing to be done in this case is to put a wedge under the wheel, either back or front of the one with the broken hanger, and run this wheel up on wedge. This will raise the frame off the driver with the broken spring; then put on top of the box a

block or anything that can be put in between frame and box, such as a piece of fish-plate; then run the wheel down off the wedge, and put a block under the low end of equalizer. In order to do this, run the wheel that is blocked up on a wedge, and this will take all the weight off the bar; then take down all loose parts, and proceed.

With the spring rigging underneath you do as in the former case; but to raise equalizing-bar it is best to put a wedge or roller under the low end of equalizing-bar

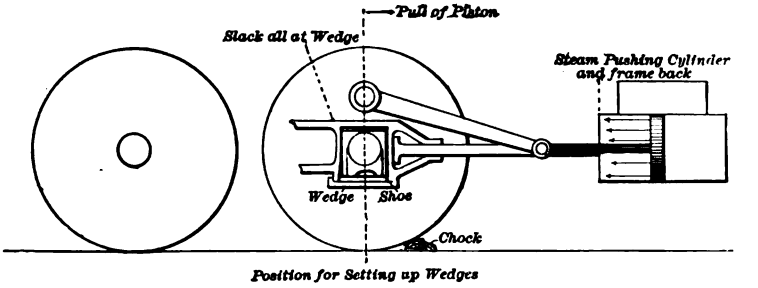

FIG. 26.

and move the engine back. If a front hanger, this will raise the bar, and then chain fast to frame. It is policy, when running a wheel up to raise frame, to put a block on top of that box, to take the strain off the springs, also to move frame more quickly; but leave it small enough to enable it to be taken out, when run down off wedge.

When a spring, spring hanger, equalizing-bar, or spring saddle breaks, do as in Fig. 22 (broken hanger), removing all loose parts. When a tire breaks, the wheel containing the break should be run up on a

wedge as thick as the tire, then the oil-cellar should be taken out and a block of wood substituted, as in Fig. 24. This will carry the weight, and make a bearing for the axle to revolve on. Never let the axle revolve on the oil-cellar, as this will cut the axle and ruin it. When an axle is broken off outside the driving-box this would not be absolutely necessary, for that axle is spoiled but block between pedestal-cap and cellar and top of box and frame.

QUESTIONS.

Upon what does the boiler and cylinder rest?

The frame.

What takes the pull and push of piston and resistance of train?

The frame.

What names are applied to the different parts of the frame?

The top and bottom rail, pedestal-jaws, and splice.

What is the use of the pedestal-jaws?

To hold the drivers in position.

What is the splice?

It is that point in an eight-wheel frame that the forward portion or bar is attached to, the back part of frame in front of front driver.

What governs the number of jaws in a frame?

The number of drivers to be used.

For what is a pedestal-cap or binder used?

To permit wheels and boxes to be dropped out or put in; also to bind jaws together.

Why are springs used?

To make engine ride easily; also to avoid the con-

cussion and jar, which would be hard on machinery and road-bed.

How is the weight on driving-boxes equalized?

By equalizing-bars attached to a frame and springs between driving-boxes, the weight suspended at the centre of bar or at the axis of rotation.

How will it equalize the weight between drivers?

If one driver goes up or down, the end of the equalizing-bar will go up or down with the box, and the weight will still be divided between the two boxes.

What is the result of using independent springs?

When one driver goes up or down, due to uneven track or frogs, it will throw most of the weight of engine on the high wheel, thus reducing the adhesive power of the low wheel, and making the engine ride hard.

What is a spring saddle?

A U-shaped iron spanning the frame and resting on the top of driving-box, upon which the springs rest.

What is a spring hanger?

An iron link connecting the spring and equalizing-bar, or spring and frame.

Of what materials are driving-boxes made?

Of cast steel and phosphor bronze. Cast-steel boxes have brass shells next to journals.

What advantage has this over a solid box?

The shell can be renewed without renewing the whole box.

What are wedges and shoes used for between boxes and jaws?

Shoes are used to prevent the wear of pedestal-jaws or frame-legs; wedges are used to take up the lost motion between boxes and pedestal-jaws.

On what side is the wedge in most locomotives?

On the back of the driving-box.

How is the wedge set up or pulled down and fastened?

By a wedge-bolt, as in Fig. 24.

What is an oil-cellar?

A hollow shell held between the flanges of driving-boxes, which is filled with sponging and oil to lubricate driving-box and journal.

What is the principal cause of driving-boxes getting hot?

The sponging dropping away from journals or getting hard.

In what position should your engine be placed to set up wedges?

On a straight, level piece of track, put crank-pin on top quarter in forward stroke, give a little steam in cylinder, and put a chock under wheels.

Why would you do this?

To get all the lost motion in the wedge side of box.

When a spring, spring hanger, or equalizing-bar or saddle breaks, what should be done?

Run wheel up on a wedge, back or front of wheel having a broken spring or hanger, and put block on top of that box, between box and frame, as in Fig. 22; run wheel down off wedge, and take down all loose parts. If equalizing-bar broke in centre, would put blocks on top of both driving-boxes, and proceed.

When a tire breaks, what should be done?

Wheel should be run up on a wedge the thickness of tire, the oil-cellar taken out, and a block put in as in Fig. 24.

Would you run without taking cellar out?

No, except when the axle breaks off outside of box, and then it is not absolutely necessary.

What is the difference between an engine-truck and a pony-truck?

An engine-truck has four wheels, while a pony-truck has only two. It is used in consolidation and mogul engines.

If an engine-truck wheel or axle breaks, what should be done?

If a forward wheel broke, collars should be set up close to boxes. Box and frame should be chained up to main frame, and a cross-piece put on back of truck frame between that and the main frame. Do the same with the back wheel. Proceed cautiously in all cases of this kind.

What should be done when a back or front driving-wheel or axle breaks on an engine?

The back or front wheels should be blocked to clear rails, and rods disconnected.

What is a blind wheel?

A wheel without a flange.

Which are the blind wheels on a consolidation engine?

The two middle drivers.

Why are these wheels made without flanges?

So that the engine will go around curves of short radius.

What is the blind wheel on a ten-wheel engine?

On a ten-wheel engine it is mostly the forward driver; in a six-wheel engine the blind wheel is the main driver or centre wheel.

CHAPTER V.

RODS AND CONNECTIONS.

THE main or connecting rod is the rod that connects the cross-head with the crank-pin, and transmits the power to the whole number of driving-wheels, and is therefore called the *main*-rod. This is illustrated in Fig. 27.

The main rod has brasses in each end, front and back. The front ends fits around the cross-head, or wrist-pin. The brass is in two pieces, and is set up by a key. Some rods are made solid, while others have straps. The P. R. R. standard for eight-wheel engines is as in Fig. 27. In driving this key (*B*) care must be taken that the set-screw (*S*) is loosened before starting key.

The back end of main-rod is the end that encircles the crank-pin. As with the front end, the rod is made with or without a strap. Fig. 27 shows a rod with a forked end, and the brass is slipped in from the back, while a block fits in between forks, and a large bolt passes through the forks and block, thus holding brasses in their place.

This is a convenient way of making rods, but there is this objection to it: If a strap or fork breaks, the whole rod is useless in that condition, and besides, it cannot be taken down on the forward centre. In other

forms the rod has a strap bolted to the main portion of rod, and leaves what is called the stub end when the strap is taken off; and if the strap breaks, it may be renewed without rendering the rod unserviceable, and can be taken down in any position.

Side-rods or parallel-rods are the rods connecting the driving-wheels together. Many efforts have been made to get a substitute for these rods, but nothing has been devised that will do better.

Where only two driving-wheels are used there is only one section of rod on each side, as in Fig. 27.

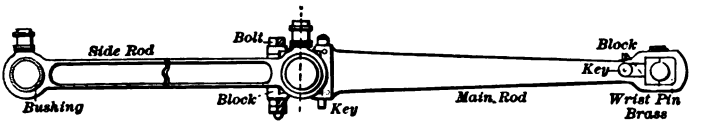

Rods for an 8 Wheel Passenger Engine

FIG. 27.

This shows a fluted or I section-rod. This form is very desirable on account of its strength and resistance to centrifugal force. This rod has no keys or straps, but has bushings of brass in each end or eye of rod. This makes a very simple form of brass, but when worn badly it must be renewed as a whole, and cannot be reduced to fit the pin, as in brasses which are in two parts, with keys to adjust them to the pin.

To keep the bushing from turning, a stud is screwed down through the eye of rod and bushing, in which is screwed the oil-cup.

On freight engines using three, four, or five driving-wheels, as in Fig. 21, the side-rods are divided into sections, as in Fig. 28, showing a set of rods for a consol-

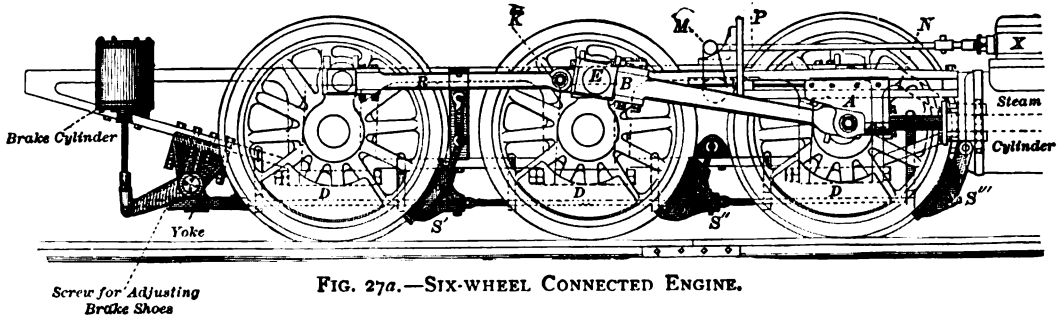

FIG. 27*a*.—SIX-WHEEL CONNECTED ENGINE.

N, Two-bar Guide.
P, Valve-rod.
D, Counter-balance.
X, Steam-chest.
M, Rocker-arm.
E, Main-pin.
B, Main-rod.
A, Cross-head.
R, Back-section Side-rod.
K, Knuckle-joint.
Main Driver without a Flange.
S', *S''*, *S'''*, Brake-shoe and Clogs.

idation engine. The main pin is on the third wheel from the front end. This set of rods is divided into three sections. The middle section is on pins 3 and 2. The straps on each end have an eye on their back ends. The other sections front and back, or 3 and 1, fit on their respective crank-pins. The ends of sections 1 and 3 have their ends next to pins 3 and 2 forked. These ends span the ends of the straps of the middle section, which have an eye in them. A pin passes through the two, binding them together, and forming what is called a knuckle-joint.

This joint is provided for unevenness of track, frogs, or going on a turntable. If this was not provided, and the rods solid, or if one wheel raised or lowered, it would break the rods.

Six-wheel connected engines have only one knuckle-joint, using two sections of rods. The joint is back of main-pin on most engines. On rods using straps there are keys or wedge-shaped pieces of steel, which pass through the strap, bearing against the brass and strap or strap and stub end of rod.

This is done in order to adjust the brasses to the wear by raising or lowering the keys. Most pin brasses have two keys, the one front and the other back; but some engines have only a single key on the main-pin brasses, on main-rod and side-rod. When made this way the key moves the front brass up to pin, and must pull the whole rod in order to get the back brass up to pin. This causes the rod to be lengthened, unless liners are put in between the brass and the back end of strap. In the back of main-rod brasses babbitt or other similar metal is placed in grooves, which pre-

vents the brasses from heating so quickly as without it.

When a pin gets so warm that it commences to throw the metal out, it begins to give trouble to the runner, and if judgment is not used the pin will get worse and cut. It will be found in most cases that there is some obstruction in the oil-cup which prevents the oil from getting down to pin, and when the metal starts matters become worse, as the metal will fill up oil-way in cup solid.

Oil-cups are made with a regulator or needle in

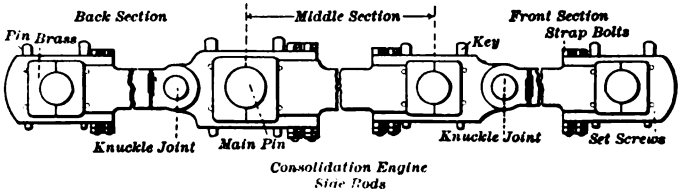

FIG. 28.

them, which can be lowered or raised to regulate oil flowing to pin, and it frequently happens that dirt or waste gets around the point of needle and stops the oil. This will cause heated bearings.

Cups should be kept clean; and in order to make the cup feed regularly, an engineer should take the cup off, fill it with oil, and set regulator by the drop, which he can see issuing from the cup if he holds it up to view.

Another cause of the rod-brasses getting warm is too tight keying, which binds the brasses to pin, and causes much friction. In this case keys should be slacked up, according to judgment. Again, the brasses

will not fit the strap correctly, or the key will be driven down too hard, springing the crown of brass.

Every engineer should understand how to key up an engine, as it is one of the important parts of an examination for promotion by a travelling engineer or master mechanic.

When keying up the side-rod always place the crank-pins on the centre, either forward or back. By so doing the length of rod will not be changed, as the pins are in the centre-line of motion through wheels and cylinder, and this is also the extreme point of travel of pin through the centre-line of motion.

Never key rods up with the pins on top or bottom quarter, for the reason that then the rods can be lengthened or shortened, as in Fig. 29; which will be

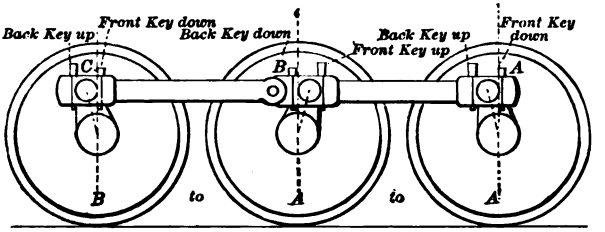

Showing the effect of Keying Side Rods.
On the C. Quarter (Drawings Exaggerated)
A to A the Rod has been Shortened.
B " A " " " " Lengthened.

FIG. 29.

plain to all, as the pins are above the centre-line of motion, and form a lever with the axis of motion at the centre of the wheel. The pins can be drawn to or spread without moving the engine in a horizontal direction. Driving down the keys *A* and *B* would

shorten rods, while driving down *C* and *B* would lengthen them. We see, then, that in either case when the pins come to the centre they would be either too long or too short, which would cause them to buckle or break if their length was changed greatly by keying.

The question with which brass to begin depends on the number of keys to a brass and the rods. On a six-wheel connected engine using a single key in front of pin it is policy to drive that key first, the others being slacked off, as this key must push brass up to pin and pull back brass to pin by moving the whole rod.

When keying up the front end of the main-rod it is a general rule to put crank-pin on either quarter, which brings the brass on the large part of pin, as the wear of wrist-pin is oblong, due to the push and pull, the pin remaining stationary, which causes the pin to be larger at top and bottom.

QUESTIONS.

What is the main-rod on a locomotive?

The rod connecting the cross-head with the crank-pin.

What are the side or parallel rods for?

To connect the drivers.

Are they solid rods throughout?

No; it depends on the class of engine, as those using but four driving-wheels have only a single rod. Six-wheel connected and consolidated engines have their side-rods divided into sections.

What is a knuckle-joint, and why is it provided?

A knuckle-joint is the point at which the sections are joined together, as in Fig. 28. This is provided so as to allow for variation in the height of the driving-wheels in passing over rough track, frogs, or turn-tables.

If there was no knuckle-joint, what would happen on rough or uneven track?

It would bend or break rods.

How are most brasses held on rods?

By straps which are bolted on the end of rods, the brasses fitting in the straps.

Are there any other forms?

Yes; a solid bushing fitted into the end of rods.

What advantage has the divided brass over a solid bushing?

The divided brass can be reduced to fit pin as it wears. The solid bushing must be renewed when worn.

How are the brasses held to pins?

By keys which are tapered or wedge shape, which take up the space between strap and bars when driven down.

How many keys are used to one set of brasses?

Generally two, one on each side of brass, although some use only one, especially on the back end of main-rod.

Are there many main-rods having the back end without straps?

Yes; strap being solid with rod, using a block and bolt to hold brass in. This is called forked or spade handle rod.

Can this rod be taken down in all positions?

No; it cannot be taken off pin on the forward centre.

What causes the pins to become hot?

It is mostly caused by not getting any oil to the pins, due to the oil-way becoming stopped up by dirt or waste, regulator or needle working down, brasses keyed up too tight or out of line, also metal thrown out filling oil-way up, and for the want of oil in cup.

What should be done when pin becomes warm?

Oil-cup should be examined for any of the above defects, and if the pin is very warm would cool it off. Raise regulator if the cup was full of oil, to let it feed more freely. If oil feeds freely and pin still runs warm, would slack up on keys, using judgment in doing so.

Is there any particular position in which to place crank-pins when keying up side-rods?

Yes; the pins should be placed on either forward or back centre.

Why is this done?

So that the pins will be in the centre-line of motion through driving-wheel, or at the extreme point of travel of pins through the centre-line of motion.

If placed on any other point, what would be the result of hard keying?

The rod could be made shorter or longer.

What would be the result if keyed in that way when pin came on the centre?

It would bend or break the rods; or if not keyed that much, would cause pins to run warm.

In what position is the main-rod usually placed?

Mostly on the top quarter, so as to bring the wrist-pin brass on the largest part of pin.

What would be the shape of a wrist-pin much worn?

Oblong; as the pin does not revolve, and the wear is front and back, due to the push and pull of piston-head.

Is there any particular pin to key in keying side-rods?

That depends on the kind of rods and the number of keys to a brass.

CHAPTER VI.

BREAKING OF RODS.

WHEN an engine breaks a side-rod, strap, or pin, the opposite rod must be taken down; also on an engine having four driving-wheels; and it should never be started unless this is done, as it is liable to break the good rod or pin. If the engine should slip when on the centre, it will do this, and it is liable to go either above or below the centre-line of motion, or in the opposite direction to that of the main-pin.

The reason for this is that there is nothing to guide or pull the pin in the proper direction, as when two rods are connected to their respective pins. This rule applies to all classes of engines, but it is not necessary to take all the side-rods down on all engines, as will be explained.

It has been argued that one side-rod could be run without any danger, as the main-pin would pull the back-pin around in the right direction, if it went over the centre. This is all a mistake, as will be seen by Fig. 30, which shows the engine in the forward-motion back-stroke. The back-pin has passed above the centre, due to the backward push of the piston, and having no side-rod on the other side to guide, it was free to go either way if the driving-wheels slipped. Some think that with the engine going forward, with the

pins in this position, the pin would be pulled down below the centre-line of motion; but this cannot occur: as the main pin is travelling backward, it is pushing the other pin away from the centre in the direction of the arrow, and under no circumstances can that pin (*A*) come below the centre, unless it breaks or buckles the rod. Then, due to the forward motion of the engine, the wheel would reverse itself. So the reader will

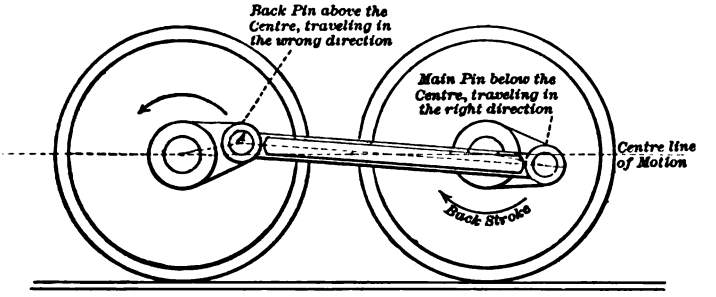
Back Pin above the Centre, traveling in the wrong direction
Main Pin below the Centre, traveling in the right direction
Centre line of Motion
Back Stroke

Showing the action of an Engine which is run with only one Side Rod. The back Pin has passed above the Centre.

FIG. 30.

readily see why side-rods should come down when one is broken; as on the consolidation engines, where the rods are divided into sections, if a back or a forward section breaks it is only necessary to take down the opposite section, but if a middle section breaks, all the side-rods on both sides must come down, for the reason that when a middle section breaks, all the support for the other sections is gone, the knuckle-joint being on each end of the middle section. This must be done in case a pin holding or a middle section, a strap, or bolts breaks.

On six-wheel connected engines the side-rod is in

two sections, the forward section back end having the knuckle-pin.

If a back section breaks, the opposite section must come down. If a forward section breaks, all the side rods must be taken down. When the main-rod breaks, the engine must be disconnected, as when a valve-rod breaks. If both rods break, it is not necessary to take side-rods down for towing.

Taking down side-rods reduces the power of the engine to pull a train, in proportion to the number of drivers disconnected, as the tractive force becomes in excess of the adhesive force or power, which is due to the weight on drivers, and this causes an engine to slip when under steam if the throttle is opened wide.

Broken driving-axles often occur, and the wheel is thrown off, usually breaking side-rods and main rod or pins.

If a main driver breaks off outside of box, the engine should be brought in with the good side, taking down all side-rods. The box on broken side should be blocked up, putting a block between the top of box and top of frame, and also between the bottom of box and pedestal-cap; this prevents the axle from binding, and keeps the box in position.

QUESTIONS.

If a side-rod breaks, what must be done before starting engine?

The side-rod on the other side must be taken down.

Why must this be done?

So that the good rod may not be broken.

Why would the good rod be broken if left up?

If the engine stopped at either centre, the back crank-pin would be liable to go either above or below the centre-line of motion, there being no rod on the other side to pull it over the centre. If it went above the centre, as in Fig. 30, it would break the rod or pin.

If the pin passed above the centre, could the main pin pull it back again?

No, that would be impossible without breaking either rod or pin.

When a back or forward section breaks on a consolidation engine, must all the side-rods come down?

No, only the front or back section, on the other side.

When the middle section breaks, what must be done?

All the side-rods must come down on both sides; the same must be done if a pin, strap, or bolt breaks on a middle section.

Why must all come down?

On account of the knuckle-joints being on each end of the middle section, thus leaving no support for the front and back sections.

When a main pin breaks on a six-wheel connected engine, what must be done?

All the side-rods must be taken down on both sides, and when only a back section, the opposite section is taken down.

What effect does disconnecting side-rods have on an engine?

It reduces the power of the engine to haul a train, in proportion to the weight on each driver disconnected.

How does the engine act when the throttle is open?

The engine will slip, because the tractive force is in excess of the adhesive power.

Can an engine be run when an axle breaks outside of box?

It can be run.

When an axle breaks in the centre, what should be done?

The wheels should be blocked up to clear track, and disconnected.

CHAPTER VII.

VALVE-MOTION.

THIS is a portion of a locomotive which often remains a mystery to many. The writer will endeavor to make it as plain to the reader as possible. Starting with the valve, which (as has been shown in a previous chapter) is a hollow shell in the form of the letter D, this valve slides over the steam-ports, controlling the inlet and outlet of steam; also the exhaust.

Lap is the amount that the valve extends over the edge of the steam-ports, when the valve is in the centre of its travel, as in Fig. 31. The purpose of lap on a valve is to get an increased amount of expansion from the volume of steam used in the cylinders. Increase of lap is increase of expansion, to a certain extent, as the valve will release the steam earlier in the stroke if the exhaust side of valve is line on line with steam-ports.

Inside lap is the amount that the exhaust side of valve overlaps the port, as in Fig. 32, which causes the valve to exhaust the steam later in the stroke; but then it will close the valve earlier to the exhaust, and cause greater compression.

Inside clearance is the amount that the port is open on the exhaust side of valve, when in the centre of its travel, as in Fig. 31. In this the valve will exhaust

the steam earlier in the stroke of the piston, but will close the exhaust later, thus reducing the compression. With a valve without lap, the steam would follow full stroke without expansion, which would be wasteful.

Lead of a steam-valve is the amount the valve has opened port when the crank-pin is on either centre. The idea of having lead is to provide a cushion and help start the engine off centre. There is a great difference in opinion as to how much lead an engine should have, but generally freight engines are given

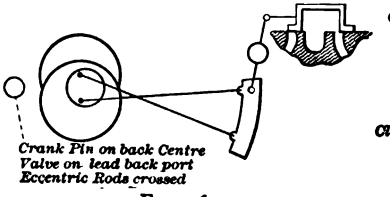

FIG. 36.

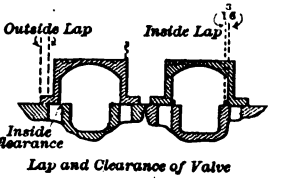

FIG. 31. FIG. 32.

one eighth lead, full stroke, and passenger engines one sixteenth.

Valve-motion is composed of several parts, as Fig 33 shows. We will start with the eccentrics which are fastened onto the main drivers. As a rule, the eccentric encircles the main shaft, and is the only substitute for a crank. There are four on an engine using the Stephenson or link motion, two for a link—the forward-motion eccentric, which controls the motion of the valve when running forward; the backward eccentric, which controls the motion of the valve when running backward.

Eccentric sheaves or wheels are made in two parts, and bolted together by studs, as in Fig. 33. The

method of fastening to the axle is by a key and set-screws. The travel of the valve is controlled by the travel of the centre of eccentric in a horizontal line each side of the centre of axle. Thus if we had a valve whose travel was four inches we would place the centre of the eccentric two inches above the centre of axle or horizontal line *AB* in Fig. 34; then when the axle revolved, the centre of eccentric would travel just four

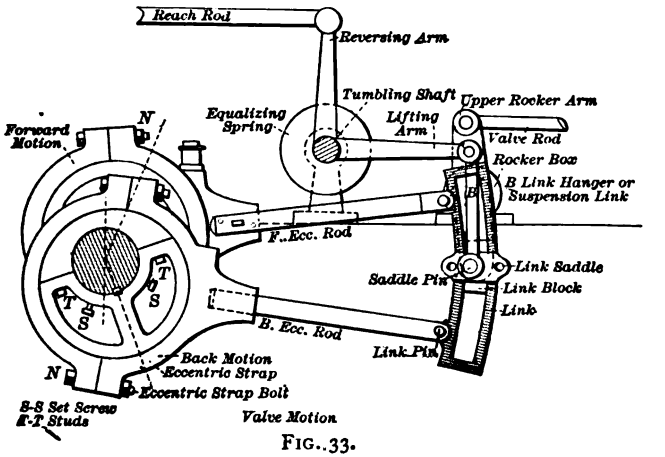

FIG. 33.

inches in a horizontal line, which would be the travel of valve.

There is, however, another point with which we must deal, and that is the lap and lead of valve: this, then, will cause the centre of eccentric to be moved beyond the vertical line *CD*, in Fig. 34, just the amount of lap and lead of valve, which in this case may be thirteen sixteenths of an inch,—three-fourths lap *plus* one-sixteenth lead,—which is called the angular advance of

the eccentric center. If this were not done the piston-head would leave the end of the cylinder before the valve would open, as the valve would have to travel the length of lap and before it would open the port of the cylinder; in that case the piston-head would lead the valve.

It is often asked if reducing the diameter of the eccentric would diminish the travel of valve. The answer is: No, not so long as you do not change the position of eccentric centre to that of the axle, but it would require an eccentric-strap of smaller dimension. Eccentric-straps are made in two pieces, as in Fig. 33, and are bolted together by strap-bolts *N* and *N*. In order to keep the strap on the eccentric, the straps are made hollow, with a flange in each side, which fits the eccentric.

Fastened to the eccentric-strap is the eccentric-rod, which connects the strap with the link. This rod is fastened into the strap by three bolts. The middle hole is usually made oblong, so as to allow the rod to be shifted when setting the valves.

The forward end of the eccentric-rod is forked, spanning the link, as in Fig. 33. This end of the rod is fastened to link by the link-pin, which runs through the eye in link and fork of rod. This construction is the same for the forward and backward motions.

As usually constructed, the forward eccentric is next the driving-box, and the backward inside. In all indirect motion using a rock-shaft, the forward eccentric-rod is connected to the top of the link. The link is simple in its construction, but is an important feature

in valve-motion, as by its use the motion is reversible, or the engine can be run either forward or backward.

As generally made, it is forged solid; but some builders make the two sides separately, and use a block top and bottom, putting a bolt through them, binding it together as a link.

The link is not straight, but is curved, having a given radius. This radius is measured from the centre of the axle to the centre of link, as in Fig. 33.

The reason for making a link with a radius is on

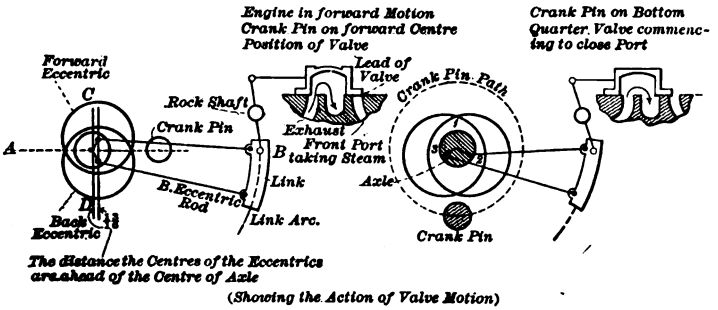

FIG. 34. FIG. 35.

account of the link being raised and lowered each side of the centre-line of motion, and if straight it would throw the valve out in its travel.

On the back of the link is a cross-piece called the saddle, and spanning the link on this saddle is a pin, which is called the saddle-pin. This is the axis on which the link rotates or swings.

From this saddle-pin to the lifting-arm is the link-lifter or suspension link, which is attached to lifting-arm, which in turn is welded to tumbling-shaft, the

tumbling-shaft having two arms, lifting and reversing. Attached to the reverse-arm is the reach-rod. This is connected to the reverse-lever, as in the cab. Within the link-slot is a block called the link-block. This link-block has flanges on it to keep it in the link. Fitting in this block is the lower rocker-arm pin. The rocker-shaft has two arms, the upper and lower. To the upper arm is attached the valve-rod, and the lower arm as just stated is connected to link-block.

Remember that in the forward motion the valve is controlled by the forward-motion eccentric, and the centre of link is below the centre-line of motion, and we will try to explain the operation of motion and the reason why raising and lowering the link reverses the motion. By looking at Fig. 34 we see that the crank-pin is on the forward centre, and the eccentrics are ahead of the centre of the axle an equal distance, which is the lap and lead of valve. The link is all the way down, or in full forward motion. This being an indirect motion, it must be remembered that the upper rocker-arm travels directly opposite to that of the lower arm, or centre of the eccentric. A good rule for remembering the difference between a direct and indirect motion is, that in an indirect motion the centre of the eccentric follows the crank-pin, and in a direct the crank-pin follows the eccentric centre.

By referring to Fig. 35 you will see that if the crank-pin was to travel from the forward centre downward to the bottom quarter, or near that point, the centre of eccentric would travel from 1 to 2, and the valve would travel back and uncover port full, the valve having travelled back while the eccentric centre went ahead.

If the crank-pin continues to travel to the back centre, the valve would start forward and close the port, and when the crank-pin is *on* the back centre the valve will be on the lead, on the back-port, as in Fig. 36. The steam begins to exhaust from the front port as soon as the valve passes the centre of travel when line on line, and no inside lap; and so on, the full revolution of the driver.

The valve uncovers and covers the port, and comes

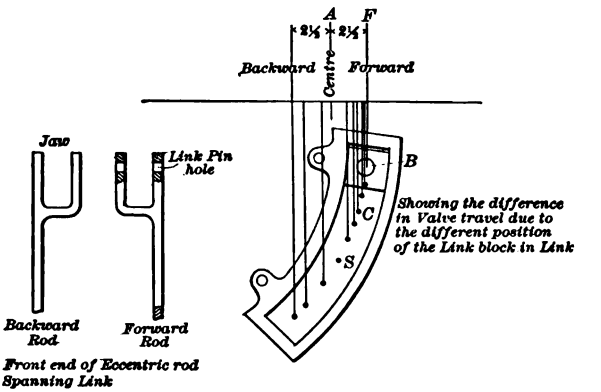

FIG. 37.

on the lead when the crank-pin passes from one centre to another, at the same time exhausting the steam out of cylinder.

We will now explain why raising and lowering the link short-strokes the valve, and also reverses the motion of the valve, in as simple a way as possible. By referring to Fig. 37, which is an outline of link, let us consider the link as a lever, with its fulcrum at *S* or the saddle-pin. Then if the link should be moved

forward from the vertical line *A* to what would be full forward travel of link, the dot *B* would move from *A* to *F*; but with the same movement of link the dot *C*, midway between the dot *B* and fulcrum *S*, would move only half as far as *B*. Thus it is with the link-motion if the link is all the way down in the forward motion. The link-block will be in top of link-slot, and is controlled wholly by the forward-motion eccentric; now if the link is raised the block will be further down in link, or at dot *C* in Fig. 37, and would travel only half as far as when top of link-slot.

When in this or any other point between full stroke or top of link-slot and centre of link, the valve is being short-stroked, and is partly controlled in its movements, by both eccentrics.

The action is the same for backward motion. When the link-block is in the bottom of link-slot the engine is in the backward-motion full stroke and the valve is controlled by the backward motion eccentric; and when the link is lowered toward the centre, the valve is being short-stroked, the same as in the forward motion.

Raising or lowering the links also will reverse the motion of valves and engine. The position of the centre of the eccentrics, in connection with the link, controls this action.

By Fig. 35 it will be seen that the link is in full forward travel and the port is full open. The centre of the eccentrics is at 2 and 3, while the crank pin is not quite at the bottom quarter.

The reason for this is that the centres of the eccentrics are not at right angles with the crank-pin, but are moved forward the length of the lap and lead.

Drawing the vertical line *ON* in Fig. 38, the link-block centre is at 7, or forward of the vertical line *ON*, while the bottom of link is back of the vertical line *ON*.

To reverse the motion, the links are raised, and the link-block will be in the lower part of link-slot. It must not be forgotten, that in the act of raising the link it changes its position very slightly, but slides up over

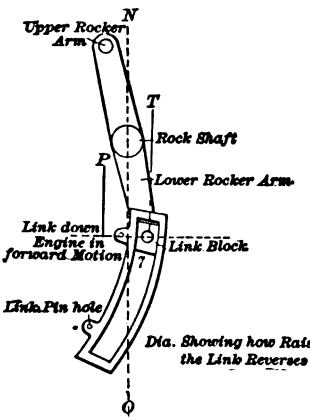

FIG. 38.

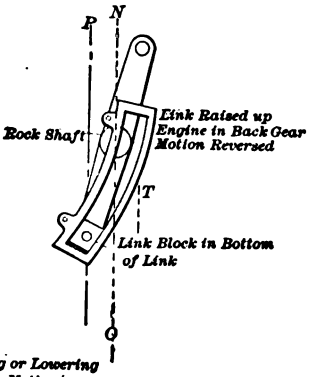

FIG. 39.

Dia. Showing how Raising or Lowering the Link Reverses the Motion

the link-block, the slot acting as a guide to the link-block, which in turn moves the rocker-shaft and valve. When the link is raised from the full forward motion to the backward motion, the block will then be in the bottom of link-slot, having moved from the line *T* in forward motion to the line *P* back of the vertical line *ON* in Fig. 39, and has moved the valve across the seat and uncovered the back-port, reversing the motion of the engine.

Remember, too, that the link-block must follow the slot in link, and the rocker-arm must move whichever way that the link is inclined, either side of the vertical line *NO.*

The question is often asked: "Does the lead of opening increase as the links are raised up?" I answer that it *does* increase, for the reason that it is due to the position of the centre of the eccentric. If the straps of the eccentric-rods encircled the axle, their centres in line with the centre of the axle, this would not occur; but as they move around the centre of the eccentrics, whose centres are out of line with the centre of the axle, also as the radius of the link is taken from the centre of the axle, then, if the crank-pin is on the forward centre and the link raised, the centre of the eccentric will shove the links ahead, which increases the lead-opening of the valve. As this action takes place on either centre, or as the links are raised up while running, the shorter the travel of valve, the greater the lead.

QUESTIONS.

What is meant by the lap of valve?

The amount that the valve extends over the edge of steam-port when the valve is in the centre of travel.

Why does a valve have lap?

In order to get an increased amount of expansion in the steam-cylinder.

How does a valve without lap act?

Cylinders would take steam throughout the whole stroke, which is not economical when not using a cut-off.

What is meant by the lead of a valve?

Lead is the amount that the port is open when the engine is on either centre.

Why is lead given to a valve?

To form a cushion for the piston-head; and at the same time, if the compression is in excess of the pressure in the chest, it will allow it to equalize.

Why is a cushion required in a cylinder?

To prevent the piston-head from striking the cylinder-head, also to retard the motion of the reciprocating parts.

What is meant by the inside lap of valve?

It is the amount that the valve extends over the edge port on the exhaust side of valve, as in Fig. 32, which shows three-sixteenths lap on inside.

Why is a valve given inside lap?

In order to increase the expansion, by preventing the steam from exhausting as soon as it would if there were no inside lap; but it produces an earlier cut-off of the exhaust.

What is the inside clearance of a valve?

It is the amount that the port is open on the exhaust side when the valve is in the centre of its travel.

Why is it used in a valve?

To produce a later closing of the valve to the exhaust, by reducing the back pressure or compression, but at the same time it reduces the amount of expansion by an earlier exhaust-opening. (See Fig. 31.)

What is the most common form of valve-gear which is used on the American locomotive?

The link-motion. The names of the parts are shown in Fig. 33.

What governs the travel of the valve?

The throw of the eccentric or the distance the centre of eccentric travels in a horizontal line, providing that the rocker-arms are of equal length.

What is the position of the eccentric centres when the engine is on the forward centre?

The centres are in front of the centre of axles, or line *CD*, as in Fig. 34.

What distance are they ahead of the line *CD*?

The length of the lap and lead of valve.

Why must they be in advance of the line *CD*?

If they should be at right angles with the crank-pin, the piston would leave the end of cylinder before the valve opened the steam-port. This is called the angular advance of the centre of the eccentric, and is equal to the lap and lead of valve.

In how many parts are the eccentrics?

They are made in two parts, so that they can be put on an axle.

How are they joined together, and fastened on an axle?

The parts are fastened together by studs, as in Fig. 33, and then fastened to the axle by set-screws *SS* in Fig. 33. A key is also provided.

On what axle are the eccentrics usually attached?

Mostly on the main driving-axle.

What is an eccentric-strap?

An eccentric-strap encircles the eccentric, and has the back end of eccentric-rod attached to it.

How are the parts of the strap fastened together?

By strap-bolts, as in Fig. 33.

In a locomotive valve-motion, how many eccentrics are there?

Four—a forward and a back-up eccentric for each valve.

To what part of the link is the forward-motion eccentric-rod generally attached?

To the top part of the link; the end of the rod is forked, spanning the link.

What is the use of the link in the valve-motion?

By using the link the motion of the engine can be reversed, and the valve can be short-stroked.

What is the radius of the link, and why is the link curved?

The radius is the distance from the centre of the axle to the centre of the link or link arc. The link is curved on account of being raised and lowered, rotating around a centre with the curve in the link. The moving of the link up or down does not make the travel unequal, as it would if it was not curved.

What is the link-block?

The link-block fits in the slot of link, and is attached to the lower rocker-arm pin.

What are the saddle and saddle-pin?

The saddle is a plate spanning the link, to which the saddle-pin is fastened, the saddle-pin forming an axis for the link. To the saddle-pin is attached the link-hanger or suspension-link.

What is the use of the tumbling-shaft?

A tumbling-shaft * runs across the frame, carrying the lifting-arms, and also the reverse-arm, to which the

---

* Also called lifting-shaft.

reach-rod is attached. To the lifting-arms is attached to the link-hangers.

What is provided to counteract the weight of the links, eccentric-rods, and tumbling-shaft?

An equalizing-spring, which takes the weight and makes the links easy to raise and lower.

Are the rocker-arms used in all valve-motions using a link?

Only in indirect motion.

Are they always of the same length?

They are of different lengths when the travel of the valve is greater than the throw of the eccentric.

Should the steam-ports be covered when the engine is on either centre, with a valve having lead?

No; the valve will be wider open when in the out notch than when full throw, even when on the centre.

Why does this increase of lead occur?

On account of the position of the centres of the eccentrics and the movement of the link.

Why does the raising or dropping the link reverse the motion?

The motion is reversed by the position of the link, or in whatever position the links are. This position is governed by the centres of the eccentrics, and as the link is raised or lowered the link-block must follow the slot of the link, which acts as a guide to the block. (See Figs. 38 and 39.)

BREAKING DOWN OF THE VALVE-MOTION.

When an eccentric-rod breaks, what must be done in the way of disconnecting?

Both eccentric rods and straps must be taken down.

Cover port and disconnect as for a broken valve-rod. (See Fig. 15.)

If the forward-motion eccentric was broken, could the engine be run without taking down both rods?

Yes, by disconnecting the link-hanger, and letting the link carry on top of the link-block.

If the eccentric became loose on the axle and shifted, what could be done to fasten it in place, the key and sets-crews of that eccentric being lost?

Take the two set-screws from the other eccentrics and fasten it. There are eight set-screws on the shaft.

Is it possible to break a backward-motion strap, and not take down the eccentric-rods?

This can be done by fastening the back end of rod fast to the forward motion.

Could the engine be reversed on that side when the back-up rod is fast to forward-motion rod?

No, it should be in the forward motion on that side, because there is only one eccentric that controls the motion, that being the forward eccentric.

Would an engine hold if reversed in that condition?

No, as it would not have any braking-power.

When an eccentric slips or is moved away from the proper position, there being no key-way for a guide, how would it be possible to set the eccentric so as to bring the engine in on the road?

The proper way to do this is to place the engine on the forward centre, and set the slipped eccentric by the good one. If it is the back-up eccentric that has slipped, put the reverse-lever in full forward notch, and make a mark on the valve-stem, close to the stuffing-box. After this is done, put the reverse-lever in full

back notch, and move the loose or slipped eccentric around until the mark on valve-stem comes back to stuffing-box; then fasten eccentric, and it will be in proper position. This applies as well to the forward eccentric. If slipped, set it by the good one or back-up eccentric.

Why is it possible to set one by the other?

Because when on either the forward or back centre the eccentric centres are the same distance ahead of the centre of axle, as in Fig. 34.

Aré there any other ways of setting a slipped eccentric?

There are other ways, but the one referred to is the best. It can be done by using the cylinder-cocks as a guide. If engine is on the forward centre, move the eccentric until there is but little steam escaping from the front cylinder-cock. This will place the eccentric nearly right.

When a link-hanger, tumbling-shaft, lifting-arm, or reach-rod breaks, what should be done?

When link-hanger, saddle-pin, reach-rod, or tumbling-shaft breaks, it would leave the links dropped down on top of the link-block, and the best thing to do is to fit blocks in the links, as in Fig. 40. When a link-hanger or saddle-pin breaks, blocks should be put in that link only; if running in the forward motion, the reverse-lever should be put in the position that the engine will be run, and then measure the distance from the top of link to the link-block, on the good side; that will the length of block to be put on top of link-block on the broken side. This will be a short block. When running in the backward motion, the link-block will be

in the bottom of the link, as in Fig. 41, and then it will require a long block on top of the link-block. A hole should be bored through it to fasten it to link. This rule is applicable to several breakdowns.

If running a fast passenger train, would it be policy to stop and block other lines by doing as directed in the former rule for the breaking of saddle-pin or link-hanger?

No; would leave link carry on link-block, putting

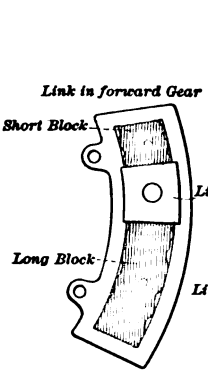

FIG. 40.

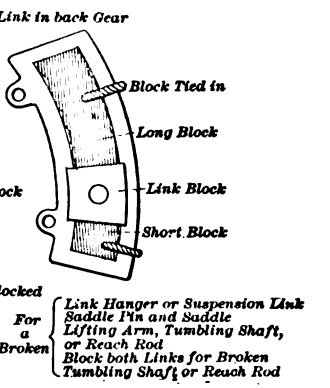
Link in back Gear
Block Tied in
Long Block
Link Block
Short Block
Links Blocked
For a Broken
Link Hanger or Suspension Link
Saddle Pin and Saddle
Lifting Arm, Tumbling Shaft, or Reach Rod
Block both Links for Broken Tumbling Shaft or Reach Rod

FIG. 41.

some waste between block and top of link, and proceed.

When a link-block pin or lower rocker-pin breaks off, what should be done?

Would get the block, if possible; disconnect the valve-rod from the upper rocker-arm cover ports and disconnect main-rod, push the lower rocker ahead to clear the link, and fasten; then proceed with train. This applies the same when a lower rocker-arm is broken.

How can a valve be put in the centre of seat, to cover ports?

By the reverse-lever. If the crank-pin is off the centre, by putting the reverse-lever in centre notch, or by opening the cylinder-cock and moving valve until the steam disappears, then move valve one half an inch or more, and the valve will have ports covered.

Why not shove them all ahead or back, and leave one port open?

The valve would drop from the seat to the receiving-port, which would cause the valve to be cocked up on seat, and the steam would blow out the exhaust-port, and one port should not be open to cylinder.

CHAPTER VIII.

VALVE-SETTING.

LOCOMOTIVE-ENGINEERS, as a rule, do not set valves, but it is nevertheless a subject that should be understood.

Valve-setting is usually done in the shop, by a person who has had experience in that class of work.

The first thing to be done when setting valves is to get the crank-pin in the dead-centre, and the best way to do this is shown in Fig. 42. First put the crank-pin below the centre (as in dotted line) so that the cross-head will be near the end of its travel in the guides. Make a mark on the guide at the end of the cross-head shoe, as in *A*. At the same time take a tram and scratch an arc of a circle on the centre of the tire *EE* in figure; then put a punch-mark in wheel-cover or any convenient point, put a tram point in that punch-mark in cover with the other end of tram, and scratch a line across the arc on wheel, as in *B*. Now with the line on guide-bar and the line at *B* move the driving-wheel around in the direction of the arrow in figure until the cross-head shoe comes back to the mark on guide-bar: then with the tram scratch another line across the arc on tire, as at *C*, the point of tram being in the punch-

mark of wheel-cover, as in the first case. Next, find a point on arc *EE* half-way between the punch-marks *B* and *C*, which is *S*. Now move the driving-wheel back until the point of tram comes in the punch-mark *S*, and the mark on wheel-cover. The crank-pin will then be on the centre, and the end of cross-head be at the line *N*. This method will do for either centre; only the marks on wheel will be on different parts of the tire.

After the crank-pin is on the centre the valve-setting begins. The eccentrics are generally fastened on

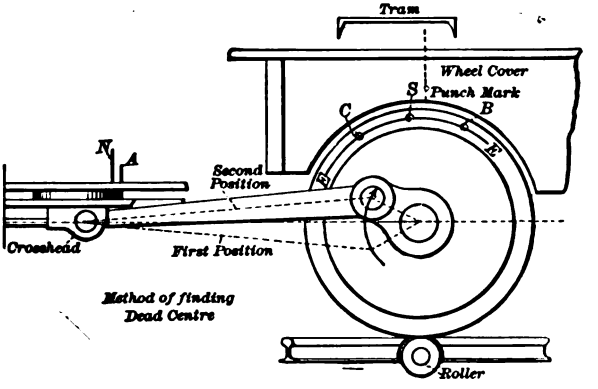

FIG. 42.

in their proper positions by a key. The links being all the way down, the next point is to find the proper length of the eccentric-rods.

The valve in steam-chest is given the proper amount of lead, and a piece of wood or tin the thickness of lead is put between valve and port holding the valve, the valve-rod being connected to valve and rocker-arm.

The eccentric-rod is then fastened to link; and as most rods have oblong holes in them to allow them to be moved, the rod is connected to the strap and the nut tightened up and the wheel moved around to the back centre; and if the lead-opening is the same as for the front port, the rod is of the proper length, and then the two other holes are marked on the eccentric-strap and bored out. But in an engine which has been running the eccentrics must be lengthened or shortened by contracting or expanding in a forge, which is done by a competent smith.

Next find the length of the backward eccentric-rod as in the forward, except that the lever is in full back gear. Try it on both centres, as before.

When an engine has become lame after being run for some time, the valves are found to be opening the ports unequally, that is, one port is open wider than the other, with the same travel on the valve. There is no difference in the travel of the valve over the seat, but the centre of the travel of the valve has been moved either ahead or back of the centre of the valve-seat.

This will cause the valve to cut off unequally, and one end of the cylinder is doing more work than the other. This can be told by the exhaust, and to rectify this the eccentric-rod should be lengthened or shortened, as the case may be; for if the valve opened wider on the front port, then on the *back* one the eccentric-rod must be shortened, which will cnange the centre of valve-travel, or throw the valve ahead and equalize the port-opening. The amount must be determined by the one setting the valves.

When the back port is open more than the front port; then the eccentric-rod must be lengthened, and the valve will be drawn back to the centre-line of the valve-seat.

When an eccentric is shifted, it can be easily known by the lead-opening. As an example, the writer was on an engine which broke a valve-stem and eccentric-straps, and for some cause the eccentric became shifted, and when the valve-setter put the gear up again, the engine had fully one-quarter lead with the valve that was used before, the lead being almost equal for both ports. The valve-setter was puzzled, when the writer suggested that he examine the eccentric centre, which he did, and found the trouble at once, moved the eccentric back in its place, and the lead was all right.

Valves cannot be made to cut off equally, on account of angularity of rod-motion; but when an engine is running along, and there are two heavy beats and two mild beats or exhaust, the trouble is that one engine is working stronger than the other, and it is caused by the link-blocks being in different positions of the link. A link-hanger that is longer on one side will cause it, and should be shortened, or both made the same length.

Another cause is, that one saddle-pin is worn more than another, or eye in link-hanger, or the tumbling-shaft boxes being of different heights. The cause very often of valve being out is the wear of driving-boxes between shoe and box; the wedge is back of box, and wear is taken up at that point, throwing the axle ahead that moves the eccentric also. In order to find

the position of reverse-lever for different cut-offs, move the piston-head from the end of cylinder the number of inches that is wanted for cut-off, and then raise links up until the valve closes the port, and mark point on quadrant.

TABLE I.

Travel of Valve.	Width of Port-opening.		Point of Cut-off.		Point of Release.		Lead.
	Back-ward Stroke.	Forward Stroke.	Back-ward Stroke.	Forward Stroke.	Back-ward Stroke.	Forward Stroke.	
2½	11/32	5/16	8	6¾	17	16⅝	9/32
2⅝	7/16	11/32	9½	9½	18⅝	18 5/16	¼
2⅞	9/16	½	12	11⅝	19⅝	19 9/16	7/32
3⅛	11/16	41/64	14	14	20 11/16	20 9/16	9/16
3½	⅞	47/64	16½	16½	21 11/16	21½	5/32
4	1⅛	1 3/32	18½	18⅜	22⅜	22¼	⅛
4½	1¼	1¼	19⅝	19½	23 13/16	22⅝	5/32
5	1¼	1¼	20⅝	20½	23½	23½	1/16

Travel of valve..... 5
Steam-ports..... 1¼
Exhaust-ports..... 2⅝
Lap of valve..... ⅞
Inside lap of valve..... 1/16
Lead full stroke..... 1/16

Table II shows the different travel and point of cut-off of two valves, one having 5-inch throw or travel and ⅞ lap, the other 3⅛ throw and ⅛ lap, both cutting off at

the same point, showing the difference in port-opening between a long- and short-throw eccentric.*

TABLE II.

Point of Cut-off.	Width of Opening of Steam-ports. Eccentric 5-inch Throw.	Eccentric 3½-inch Throw.
6 inches	$\frac{7}{32}$ inch	$\frac{6}{32}$ inch
8 "	$\frac{9}{32}$ "	$\frac{3}{16}$ "
10 "	$\frac{11}{32}$ "	$\frac{7}{32}$ "
12 "	$\frac{7}{16}$ "	$\frac{9}{32}$ "
15 "	$\frac{5}{8}$ "	$\frac{8}{8}$ "
18 "	$\frac{81}{32}$ "	$1\frac{1}{16}$ "
21 "	$1\frac{1}{4}$ "	$1\frac{1}{32}$ "

*M. N. Forney.

CHAPTER IX.

THE COMPOUND LOCOMOTIVE.

LOCOMOTIVE-BUILDERS, in endeavoring to keep the locomotive ahead as a motive power, have been advocating the compound engine, of which many have been built in this country and are being handled by our engineers and firemen. The idea of a compound engine is the saving of fuel, which means dollars and cents to any railroad company.

The different methods of compounding are the two-cylinder and the four-cylinder, also the three-cylinder, in which two high-pressure and one low-pressure are used.

ELABORATE TEST OF COMPOUND ENGINES.

It is not claimed for compound locomotives that a heavier train can be hauled at a given speed than with a single-expansion engine of similar weight and class. No engine can haul more than its adhesion will allow; but a compound will, at a very low speed on heavy grades, keep a train moving where a single-expansion engine will slip and stall. This is due to the pressure on the crank-pin on the compound being more uniform throughout the stroke than is the case with a single-expansion engine.

The principal object in compounding locomotives is to effect fuel economy, and this economy is obtained—

1. By the consumption of a smaller quantity of steam

in the cylinders than is necessary for a single-expansion engine doing the same work. 2. The amount of water evaporated in doing the same work being less in the compound, a slower rate of combustion combined with a mild exhaust produces a higher efficiency from the coal burned. In a stationary engine, which does not produce its own steam-supply, it is of course proper to measure its efficiency solely by its economical consumption of steam. In an engine of this description the boilers are fired independently, and the draught is formed from causes entirely separate and beyond the control of the escape of steam from the cylinders; hence any economy shown by the boilers must of necessity be separate and distinct from that which may be effected by the engine itself. In a locomotive, however, the amount of work depends entirely upon the weight on the driving-wheels, the cylinder dimensions being proportioned to this weight; and whether the engine is compound or single-expansion, no larger boiler can be provided, after allowing for the wheels, frames, and other mechanism, than this weight permits.

Therefore the heating-surfaces and grate-area are practically the same in both types, and the evaporative efficiency of both locomotives is determined by the action of the exhaust, which must be of sufficient intensity in both cases to generate the amount of steam necessary for utilizing, to the best advantage, the weight on the driving-wheels.

This is a feature that does not appear in a stationary engine, so that a compound locomotive cannot be judged by stationary standard, and the only true comparison to be made is between locomotives of similar

construction and weight, equipped in one case with compound and in the other with single-expansion cylinders. One of the legitimate advantages of the compound system is, that, owing to the better utilization of the steam, less demand is made upon the boiler, which enables sufficient steam-pressure to be maintained with the mild exhaust, due to the low tension of the steam when exhausted from the cylinders. This milder exhaust does not tear the fire, nor carry fuel unconsumed through the flues into the smoke-box and from there out of the smoke-stack, but is sufficient to maintain the necessary rate of combustion in the fire-box, with a decreased velocity of the products of combustion through the flues.

The heating-surfaces of a boiler absorb heat-units from the fire and deliver them to the water at a certain rate. If the rate at which the products of combustion are carried away exceeds the capacity of the heating-surfaces to absorb and deliver the heat to the water in the boiler, there is a continual waste, that can be overcome only by reducing the velocity of the products of combustion passing through the tubes. This is effected by the compound principle. It gives, therefore, not only the economy effected by a smaller consumption of water for the same work, but the additional economy due to slower combustion, It is obvious that these two sources of economy are interdependent. The improved action of the boiler can be obtained only by the use of the compound principle, while the use of the compound principle enables the engine to develop its full efficiency under conditions which in a single-expansion engine would require a boiler of such large capac-

ity as to be out of the question under circumstances usually governing locomotive construction. Also, the compound system prolongs the life of the boiler by decreasing the demand on it for steam.

We will now endeavor to explain the system of compounding, so that it may be understood by the beginner. To many who are handling our present locomotive it seems a difficult question to solve how any effect can be produced by the additional expansion. The back-pressure seems to be the most troublesome point.

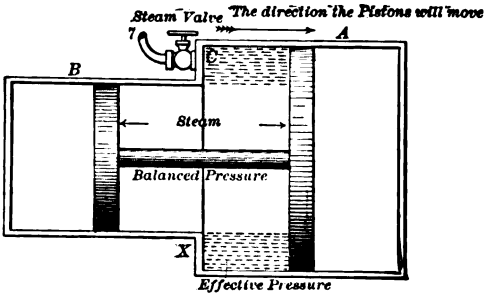

Showing the action of two Piston Heads on one rod with Steam between them

FIG. 43.

Those handling engines frequently ask the question: "How can the steam exert any more power after once expanding the high-pressure cylinder? Will not the pressure against the high-pressure piston counteract any power thus derived?"

By referring to Fig. 43 will be seen a simple way of explaining the effect of steam between two pistons on a single piston-rod, as in a tandem compound engine. This applies as well to any other system of condensing or non-condensing compound engine.

Fig. 43, on page 90, shows two piston-heads, *A*, *B*. Piston-head *A* is perhaps three times as large as piston-head *B*. These heads are fastened on one piston-rod. The cylinder is made to suit the diameters of the heads, there being no cylinder-head between these two piston-heads. Having connected the piston-heads and cylinder to suit, the pipe 7 is tapped into the cylinder at *C*. Now when steam is let into the cylinder between the piston-heads *A* and *B*, which way will the pistons move, or will they move at all?

The answer is, that they will move in the direction of the arrow, or with the larger piston-head *A*. This is because of the difference in area of the two piston-heads, they being exposed to the same steam-pressure per square inch. The greater pressure of power is against the larger piston *A*, thus overcoming the pressure against the smaller piston-head *B*. The effective pressure against the piston-head *A* is that represented by the dotted lines, which was resisted in its expansion by the shoulder or head on the cylinder at *X*. Thus it is shown that it is possible to connect two piston-heads on a single rod and get a movement of the piston-heads when the steam is introduced between them, the one piston-head being larger than the other. So it is with the compound engine. The low-pressure cylinders are of a larger diameter than the high-pressure cylinder. Now this figure represents the compound engine exactly. Fig. 44 is a tandem compound or four-cylinder engine. Some builders prefer this principle on account of the power being equal on both sides of the locomotive, and the powers of the high and low pressure in line with the centre-line of motion. One fact should

be particularly understood, that the compound engine is supposed to use the steam that is being exhausted into the atmosphere, directly from the cylinder of a high-pressure simple engine, to a better advantage by expanding it into another cylinder before it escapes into the atmosphere.

To explain this, it will be supposed that a simple engine is being run with a train, and the initial pressure is

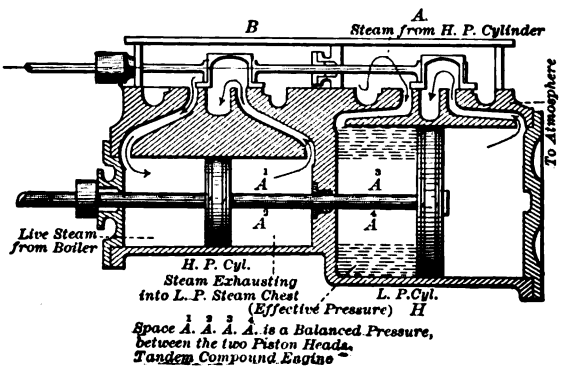

FIG 44.

one hundred pounds to the square inch in the cylinder. The point of cut-off is one-half stroke: then expansion take place at or near the end of stroke. It is found that the steam has been reduced in its pressure just one half of the initial pressure of one hundred pounds, which makes the terminal pressure fifty pounds per square inch when it escapes into the atmosphere. This terminal pressure varies with the point of cut-off and the initial pressure.

Then it is this high terminal pressure that the compound engine saves by exhausting it into the low-

pressure cylinder, causing it to expand further and to a lower terminal, as in the tandem cylinder.

In Fig. 44 the compounding is clearly shown as follows: *B* is the high-pressure and *A* is the low-pressure cylinder, corresponding to *B* and *A* in Fig. 43; but the two cylinders in this case are separated, or have a head between them, thus making them into two cylinders of different diameters. The two piston-heads are on the same piston-rod, which is connected to the cross-head. A stuffing-box is provided between the two cylinders for the piston-rod. The exhaust-steam from high-pressure cylinder passes to low-pressure chest by the pipe *O*. There are two steam-valves for controlling the inlet and outlet of steam in the cylinders, also the exhaust. As shown, the piston-heads are moving in the direction of the arrow, and the H. P. valves are cutting off steam at half stroke. This is done to illustrate the action of the terminal or exhaust pressure; steam is entering the back end of the high-pressure cylinder from the boiler, the initial pressure is one hundred pounds. The steam that was expanded in the forward end of the high-pressure cylinder whose initial pressure was one hundred pounds, cut-off at one-half stroke, expanded in that end down to fifty pounds, is now being exhausted over into the low-pressure cylinder, as shown by the arrow, and exerting its power against the low-pressure piston-head, thus getting an additional power from the steam that would have been exhausted into the atmosphere, at fifty pounds per square inch.

Then if the volume of the low-pressure cylinder was three times that of the high-pressure, and the steam

was to follow the low-pressure full stroke, the average pressure throughout the whole stroke of the low-pressure cylinder would be one third of fifty pounds, or sixteen pounds.* Thus in this case, instead of a terminal of fifty pounds per square inch, as in the simple engine cutting off at the same point in the high-pressure cylinder of the compound engine, we get a terminal of sixteen. Then by getting this increased expansion in the compound engine it enables the high-pressure cylinder of the compound engine to be reduced in its area below that of the present high-pressure engine, thus reducing the amount of steam used, which represents fuel saved. The total power of the two cylinders in a tandem engine should equal the power of one high-pressure cylinder.

In calculating the power of the compound engine, the average mean effective pressure through the stroke of high-pressure cylinder per square inch is multiplied by the area of that cylinder in square inches; then find the average mean effective pressure in the low-pressure cylinder, multiply that by the area of the low-pressure cylinder, and at the same time deduct from the total power of the low-pressure piston the area of the high-pressure piston-head, multiplied by the average pressure in the low-pressure cylinder. The power remaining after this deduction is the actual power of low-pressure cylinder; this, then, added to the power of the high-pressure piston head, is the total pull or power of the steam pushing the two piston-heads.

Another deduction has to be made from this total

---

* Omitting fractions.

power, and that is the back-pressure in face of the low-pressure piston-head. This is the total power of the compound engine. Fig. 46 shows the distribution of steam in the cylinders.

Cylinder condensation is a point that is not usually understood,—I mean in the manner in which the term is used in connection with the compound engine. Any change in the temperature of steam causes a change in the pressure of that steam, so that the higher the temperature the more expansive the steam. In compounding, excessive cylinder condensation is thought to be reduced.

Cylinder condensation is caused in the following manner: When a cylinder takes steam, the wall of the cylinder absorbs a certain amount of heat from the entering steam, thus reducing the temperature of that steam and causing a loss in pressure. This action takes place until about the time of exhaust-opening, when re-evaporation takes place, which in a simple engine is exhausted into the atmosphere. The cause of this re-evaporation is, that when the steam has expanded to the point of exhaust it is at the lowest temperature it will reach while in the cylinder at this point, the cylinder walls being hotter than the steam. The steam that was condensed while the walls of cylinder were absorbing the heat from the incoming steam being in the form of water, reabsorbs the heat from the cylinder walls and turns into steam.

Water is a great absorber of heat, and in the compound engine this regenerated steam exerts its pressure against the low-pressure piston-head. In a high-pressure or simple engine, when expansion is long in

the cylinder, it causes a great variation in the temperature of the steam.

If the steam entered the cylinder at one hundred pounds per square inch the temperature would be 338 degrees, and if expanded four times, or twenty-five pounds, the terminal temperature would be 240, leaving the walls at this temperature, so that the incoming steam would again be robbed of some of its heat, to bring the temperature of the cylinder walls up again. In the figures given we find a difference of 98 degrees between the temperature of the steam when it first entered the cylinder and when the exhaust was about to take place; and the amount of heat absorbed by the wall to equalize the temperature is 49 degrees, which causes the condensation spoken of. This condensation is less as the steam follows the piston farther before cut-off takes place, or as the expansion is reduced.

In most compounds the steam is cut off at or near the end of the stroke in the high-pressure and then expanded in low-pressure cylinder.

Keeping the temperature nearly the same in the two cylinders, preventing excessive condensation.

The different systems are being pushed, and there are a great many two-cylinder compound engines running which give satisfaction. In a compound engine simplicity of construction is the main point looked at by some builders. The two-cylinder seems to meet that point. The difference in the two-cylinder compound engine is to be found in the construction of the intercepting-valve. Some work automatically, others work by hand.

The purpose of this valve is, in starting, to introduce live steam into the low-pressure cylinder and cut it off from that cylinder when under way. Some are made so that the engine can be run as a simple engine or compound, at will.

The difference between the four-cylinder engine and the two-cylinder, in handling the exhaust steam from the high to the low-pressure cylinder, is that in the two-cylinder the steam passes into a receiver or steam pipe in the front end or smoke-arch, and there the steam is reheated, as the receiver is exposed to the hot gases coming through the flues. This is a very good feature in a two-cylinder engine.

CHAPTER X.

INDICATOR-CARDS.

THE action of double-expansion in a compound engine is very simply shown by an indicator-card.

An indicator-card is traced on paper by a machine called an indicator, of which the construction is as follows (Fig. 45):

The main part consists of a cylinder, which is attached to the steam-cylinder of which cards are being taken.

In this small cylinder is a piston-head having a piston-rod. To the piston-rod is a pencil-bar, which carries the pencil which traces the card. A spring is on the top of the piston-head to counteract the steam-pressure underneath. The springs are of various tensions, dependent on the steam-pressure used in the cylinder. On the cylinder is attached a revolving barrel, which carries the paper on which the card is traced. This barrel takes its motion from a cord which is fastened to a reducer, the reducer being fastened to the cross-head of the engine. The card then moves the whole stroke of the piston-head in steam-cylinder.

We have given this plain description of the indicator in order to give the reader some idea of how a card is taken. There are some very good books on the indi-

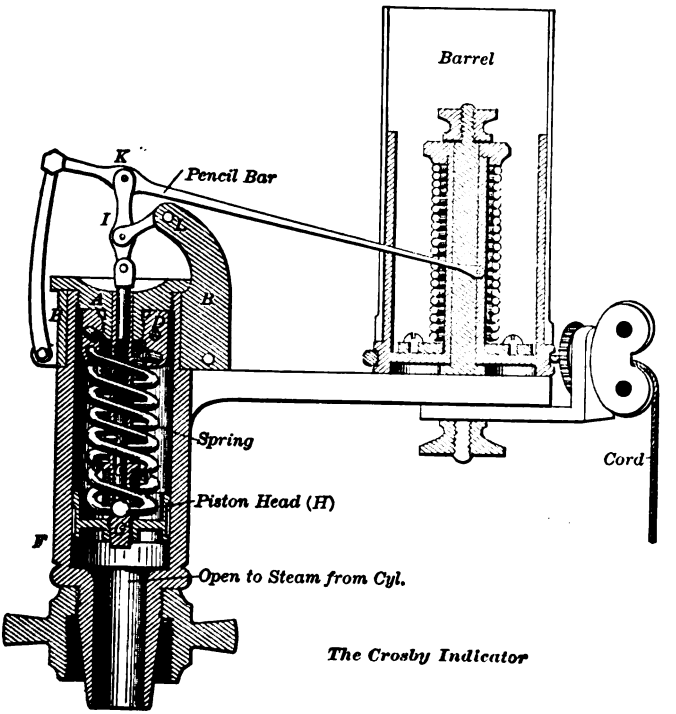
Barrel
K
Pencil Bar
I
B
Spring
Cord
Piston Head (H)
F
Open to Steam from Cyl.
The Crosby Indicator

FIG. 45.

cator, such as "Twenty Years with the Indicator," by Thomas Pray, Jr., and others.

The indicator-card shows exactly the distribution and action of the steam in a cylinder, and is traced as in Fig. 46, which shows a compound card.

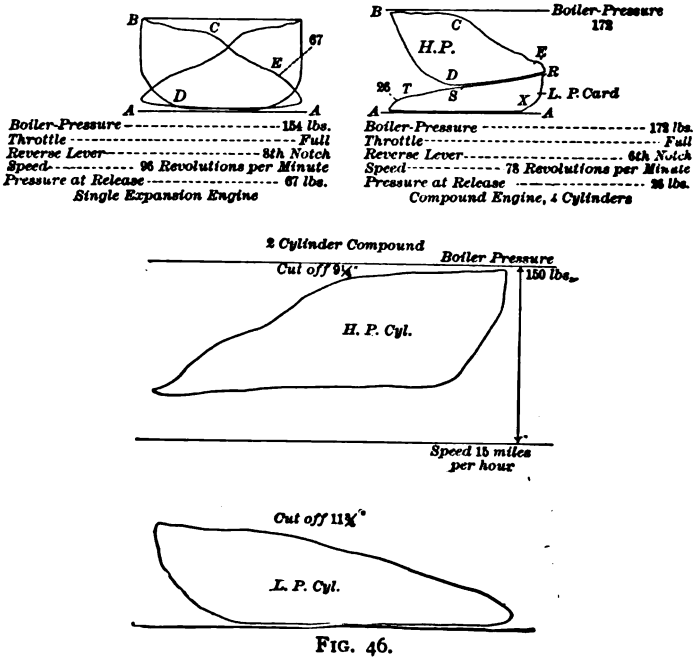

FIG. 46.

The straight line at *AA* is called the atmospheric line. With no steam in the cylinder the pencil would rest on the line *AA*, but when the steam-valve opens the pencil will be moved up to *B*, and as the valve remains open the pencil will trace the line from *B* to *C*, which is called the steam-line. When the valve closes

at *C* then expansion begins, and continues to the point *E*; this is called the point of release. From *E* to *D* is the exhaust and back-pressure line. From *D* to *B* is the compression-line, the valve being closed to the exhaust.

This is the outline of the high-pressure card. There being an indicator on the low-pressure cylinder, the low-pressure card is traced also.

When the steam begins to exhaust from the high-pressure cylinder at *E* on high-pressure card, the low-pressure valve opens and the steam-line from *R* to *S* is traced, while the line from *E* to *D* is traced on the high-pressure card.

When the low-pressure valve closes at *S* the expansion in low-pressure cylinder takes place, as from *S* to *T*; then the exhaust begins, and continues until the valve closes at *X*. As will be seen, the steam has been expanded in two cylinders before exhausting into the atmosphere, and the terminal pressure in low-pressure cylinder is 26 lbs. The boiler-pressure was 172 lbs., and has been expanded down to 26 lbs. at the point of exhaust. In Fig. 46 is a card taken from a high-pressure or single-expansion, the boiler-pressure being 154 lbs., the speed being nearly the same for both engines; the terminal pressure is 67 lbs., which is a much higher terminal than the compound engine; also, the high-pressure engine has a much lower pressure. Then it is this high terminal pressure which the advocates of the compound engine claim is used as an additional power, instead of being exhausted out into the atmosphere as in the single engine, thereby reducing the amount of steam used to do a certain amount of work, and so saving fuel.

CHAPTER XI.

DESCRIPTION OF VARIOUS SYSTEMS OF COMPOUND LOCOMOTIVES.

THE VAUCLAIN OR BALDWIN SYSTEM.

IN designing the "Vauclain" or Baldwin system of compound locomotives, the following results have been sought:

1. To compound an ordinary locomotive with the fewest possible alterations necessary to obtain the greatest efficiency as a compound locomotive.

2. To develop the same amount of power on each side of the locomotive, and avoid the racking of the machinery resulting from uneven distribution of power.

3. To make a locomotive in every respect as efficient as a single-expansion engine of similar weight and type.

4. To insure the least possible difference in the cost of repairs.

5. To attain the utmost simplicity and freedom from complication.

6. To realize the maximum economy of fuel and water.

7. To require the least possible departure from the methods of handling usual with single-expansion locomotives.

8. To permit a train, in case of breakdown, to be brought in without unusual delay, when using but one side of the locomotive.

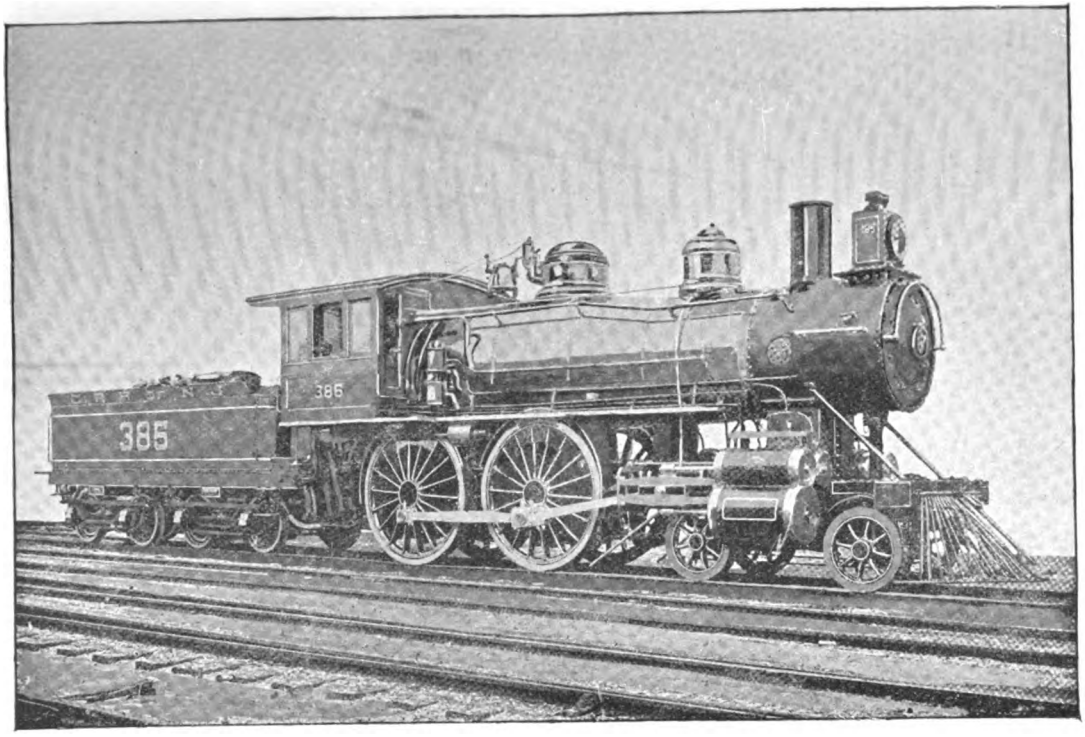

FIG. 47.—EIGHT-WHEELED "COMPOUND" LOCOMOTIVE.

Speed, 1 mile in 37 seconds.

H.-P. Cylinder, 13″ Diameter.
L.-P. Cylinder, 22″ Diameter.
Stroke, 24″.

Driving-wheels, 78″ Diameter.
Total Weight, 124,000 Pounds.
Weight on Drivers, 88,000 Pounds.

Total Wheel-base, 22′ 3½″.
Driving-wheel Base, 7′ 6″.

9. To be equally applicable to passenger and freight engines.

10. To withstand the rough usage incidental to ordinary railroad service.

The principal features of the construction are as follows:

The cylinders consist of one high-pressure and one low-pressure for each side, the ratio of the volumes

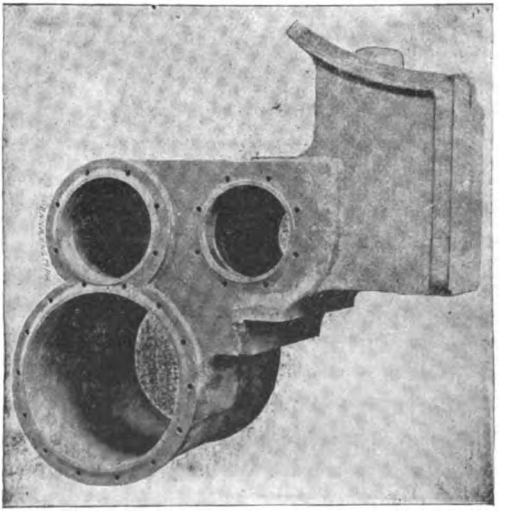

FIG. 48.—CYLINDERS FOR HIGH WHEELS.

being as nearly three to one as the employment of convenient measurement will allow. They are cast in one piece with the valve-chamber and saddle, the cylinders being in the same vertical plane, and as close together as they can be with adequate walls between them. Where the conditions, such as diameter of driving-

wheels and type of engine, will allow, the high-pressure cylinder is put on top, Fig. 48; but where the wheels are low, the position is reversed, Fig. 49. This latter is the practice with consolidation and other engines, where the roadway clearance would interfere should the first position be used. The valve-chamber is placed in the cylinder-saddle between the boiler and cylinders.

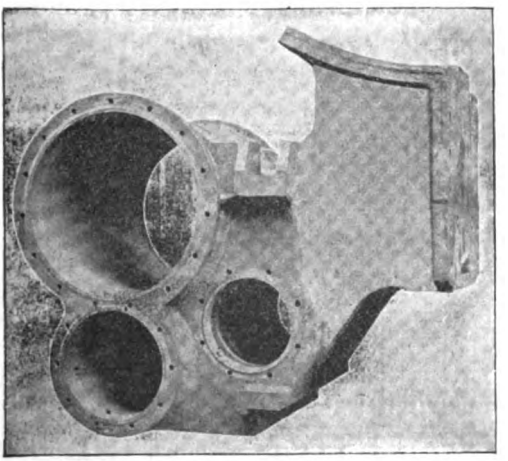

FIG. 49.—CYLINDERS FOR LOW WHEELS.

As the construction of this chamber is such that the steam-passage must be rough-cored, a bushing, in which the ports are accurately slotted, is turned to a neat fit and forced into the valve-chamber. The ports in the bushing are divided at regular intervals by bridges, as shown in Fig. 50. The valve shown by Fig. 51 is of the hollow-piston type, fitted with cast-iron rings sprung into place, after the manner of the ordinary piston-rings.

It is a combination of two D valves in piston form, the two ends of which control the admission and exhaust of steam to and from the high-pressure cylinder, and the inner rings perform the same functions for the low-pressure cylinder.

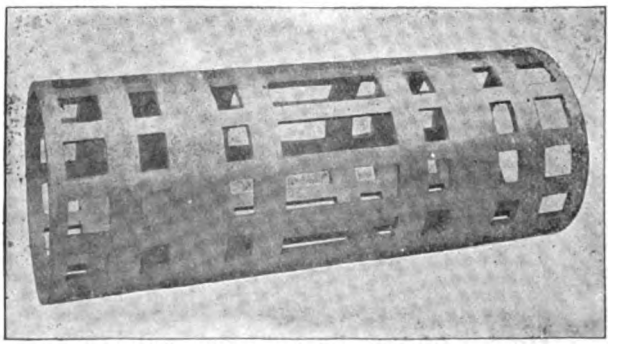

FIG. 50.

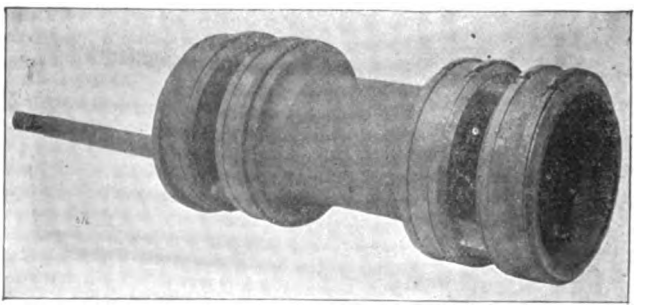

FIG. 51.

Its operation will be clearly understood by Fig. 52. When the low-pressure piston is placed on top, the position of the valve is such as to preclude the use of

the common rocker-box. Case-hardened cross-head and guides are substituted, and operated in direct motion from the links by means of an extension-bar.

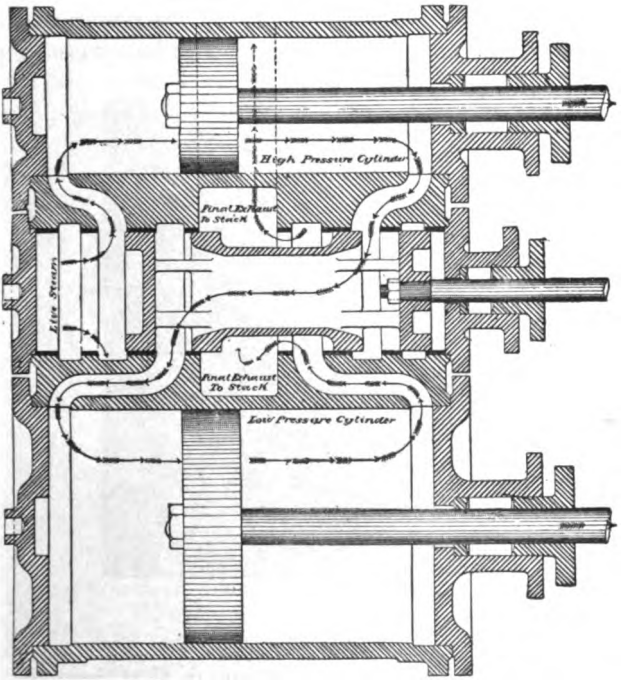

FIG. 52.—DIAGRAM OF THE BALDWIN PATENT COMPOUND CYLINDER AND PISTON SLIDE-VALVE, SHOWING THE COURSE OF THE STEAM.

In this manner the wear is reduced to a minimum, and all parts are made easy of access.

The cross-head, which is shown in Fig. 53, is of cast steel, of a pattern combining great strength with the least possible metal.

The wearing-surfaces are covered with block-tin one-sixteenth inch thick. The piston-rods are of the same size for both high-pressure and low-pressure piston. This is to secure uniformity of parts, ease in fitting up, and to make it unnecessary to carry more than one size of piston-rod packing in stock. The low-pressure pis-

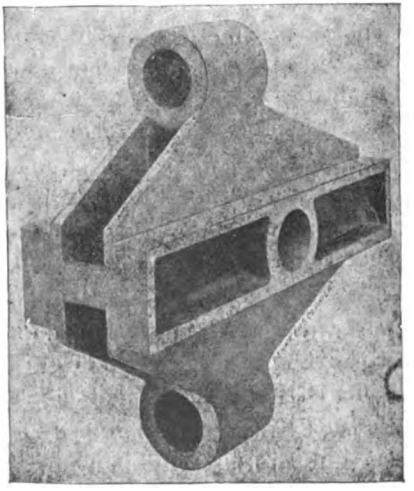

FIG. 53.

tons and rods are so proportioned that in case an excess of pressure is by accident admitted to the low-pressure cylinder they will withstand the strain with an adequate factor of safety.

The starting-valve of the Baldwin Compound is simple in construction, but the action is hardly understood by a great many handling the engine. The operation is as follows:

When the valve is put in position for starting, live steam passes from that end of high-pressure cylinder in which main-valve is admitting live-steam, through the starting-valve to the other end of high-pressure cylinder—bear in mind that the steam-port on this end of high-pressure cylinder is open to the low-pressure steam-port — through the main-valve, which is the course the exhaust-steam would take, Fig. 52. The

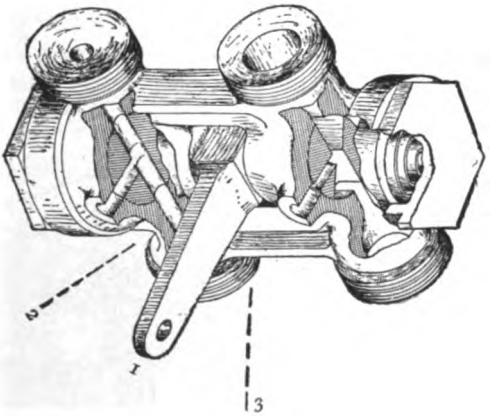

FIG. 54.—COMBINED CYLINDER-COCK AND STARTING-VALVE FOR VAUCLAIN COMPOUND LOCOMOTIVE.

live-steam would follow this same course, exerting its power against the low-pressure piston, and at the same time, at slow speed, put the high-pressure piston-head in nearly an equilibrium.

But the amount of steam that enters the low-pressure cylinder through the starting-valve decreases as the speed increases. The combined starting-valve and cylinder-cock, Fig. 54. consists of a single casting, in

which there are two taper-plugs, one controlling the high-pressure cylinder-cock and the steam for starting, the other controlling the low-pressure cylinder-cock.

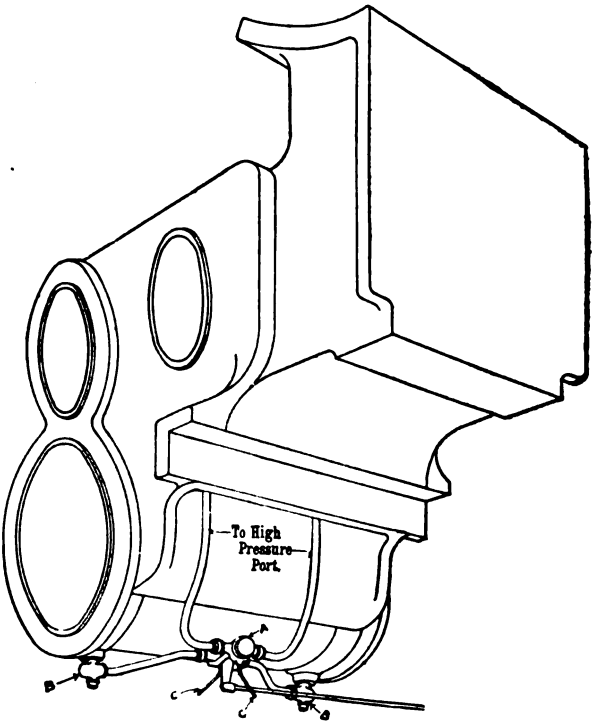

FIG. 55.—COMBINED STARTING-VALVE AND CYLINDER-COCK FOR COMPOUND LOCOMOTIVE.

The two plugs are held in place by springs, and controlled by an arm operated by a lever in cab. The operation is as follows:

In position 1 the starting-valve is open to admit

live steam to the low-pressure cylinder, the cylinder-cocks at the same time being open to the atmosphere.

In position 2 all passages are closed.

In position 3 the starting-valve only is open to admit live steam to low-pressure cylinder. Fig. 55 shows the application. Air-valves to relieve the vacuum in the low-pressure cylinders when the engine is running with steam shut off are placed in each end of the low-pressure cylinders, where cylinder-cocks are ordinarily located. *BB*, Fig. 55.

The combination cylinder-cock and by-pass valve, Fig. 56,* is designed to take the place of independent

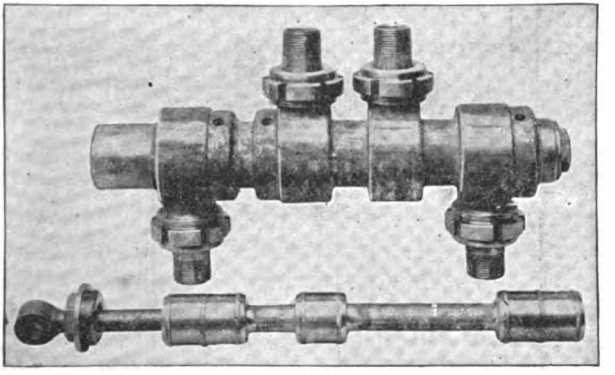

FIG. 56.

cylinder-cocks and by-pass valve for each cylinder, so the whole may be operated by a single lever in the cab.

The construction of this valve is such that by a simple movement of the lever the cylinder-cocks may be opened or closed and at the same time admit live

* Old style.

steam into the low-pressure cylinder, when needed to start a train ; or the cylinder-cocks may be closed, the live steam cut off from the low-pressure cylinder, and the engine will be compounding in the most economi-

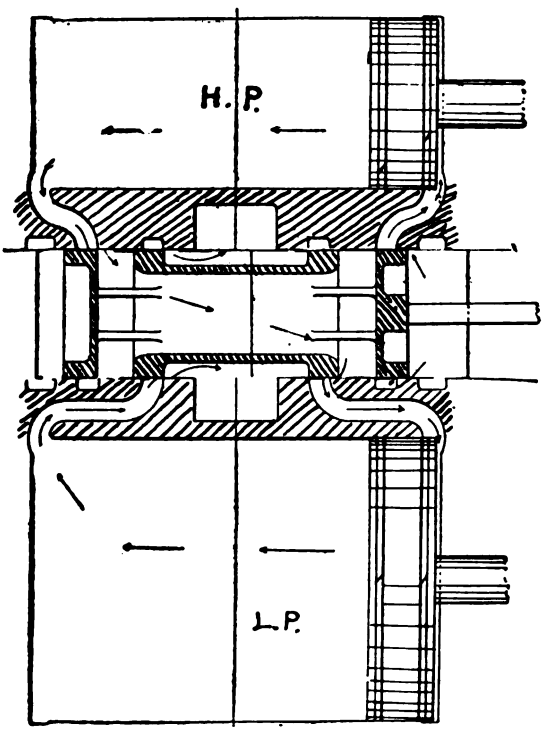

FIG. 57.

cal manner. The valve consists of a cylinder having a connection to each end of the high- and low-pressure cylinders, in which works a plunger with three piston-heads fitted with packing-rings. These piston-heads

are so spaced that by a change of their position in the cylinders the desired results described above are obtained. These are the only points of difference between a Vauclain compound and a single-expansion locomotive. The compound is operated the same as an ordinary engine, with the exception of the by-pass or intercepting valve, which is used only in starting to admit high-pressure steam to the low-pressure cylinders.

ACCIDENTS WITH THE BALDWIN COMPOUND.

When a main steam valve-rod on a Baldwin Compound is broken or disconnected, what must be done in order to bring the engine in?

The valve must be put in the centre of the seat, covering all the ports on that side. Take down main-rod and block cross-head as for a simple engine. (See Fig. 57 for position of valve.) This rule applies for both engines, as they are the same in construction.

Can a Baldwin Compound be run with both sides if a low-pressure cylinder-head is broken out?

The engine can be run with a low-pressure cylinder-head broken out with both sides without disconnecting.

What would be the course of the steam on the broken side?

The steam from one end of the high-pressure cylinder would pass into low-pressure cylinder, and from there into the stack; but from that on which head is broken out the steam would pass out into the atmosphere through open end of cylinder.

Would it be policy to disconnect in a case of this kind?

It would, on account of the escaping steam interrupting the view of the engineer, if far to go, when broken on his side. But when the piston-head breaks from the cross-head, goes out of the cylinder, the steam escapes from both ends of high-pressure cylinder into atmosphere through open ends of low-pressure cylinder.

Has a Baldwin compound ever been run with both low-pressure cylinder-heads broken out?

They have been run for some distance this way.

How many exhausts is there on the fire running with both low-pressure cylinder-heads broken out?

Only two per revolution.

Can a Baldwin Compound be run with the high-pressure piston-heads taken out of cylinders?

The engine can be run in this manner by putting a board or washer across the stuffing-box, bolting it fast. This will make it steam-tight. The steam-valve will supply steam to the low-pressure cylinder.

What would be the course of the steam?

The steam would enter the high-pressure cylinders, pass from there through the main steam-valves into the low-pressure cylinders, these cylinders acting as a high-pressure engine.

When a main-rod breaks or is disconnected, what should be done?

The valve put in centre of seat on that side covering all ports blocking cross-head; run with the other side.

On engines using the direct motion for the valves, the end of valve steam is carried on cross-head, sliding between guides.

What is a good way to fasten the valve?

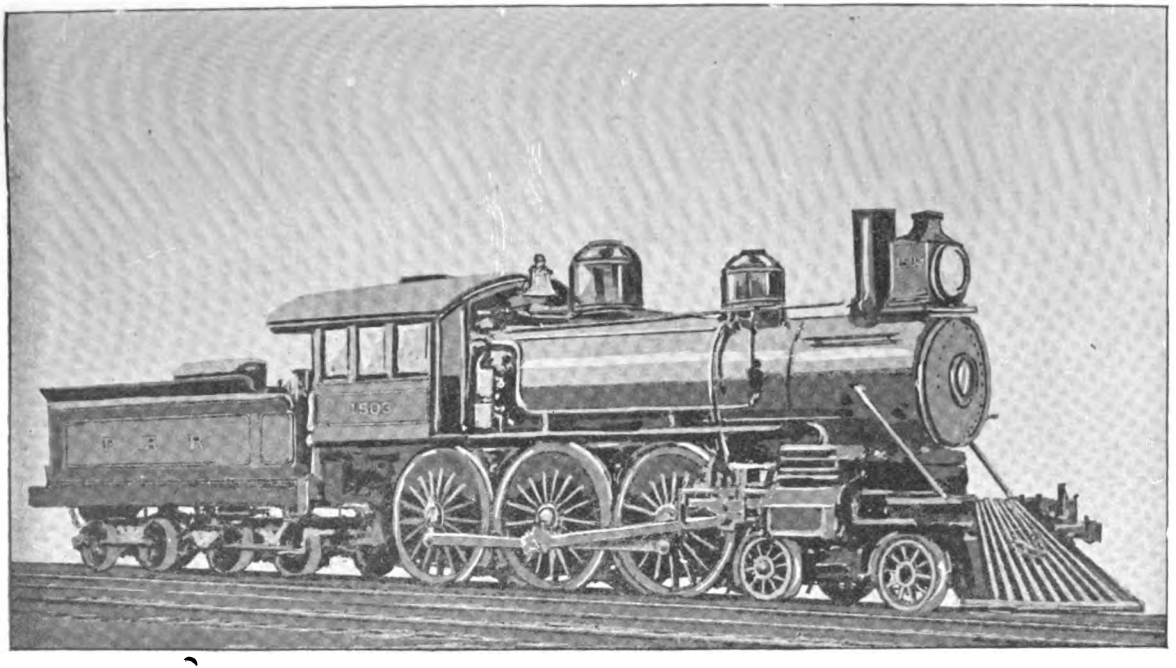

FIG. 58.—TWO-CYLINDER COMPOUND PASSENGER LOCOMOTIVE FOR THE PENNSYLVANIA RAILROAD.
BUILT BY THE SCHENECTADY LOCOMOTIVE WORKS, SCHENECTADY N. Y.

Cylinders H.P., 20×24.	Total Weight, 138,000 pounds.	Fire-box $96\frac{3}{16}$ long.
Cylinders L.P., 30×24.	On Drivers, 102,000 pounds.	" $39\frac{1}{4}$ wide.
Driving-wheels 74″.	Boiler Diameter, 58″.	Pressure, 180 pounds.

Put the valve in centre of seat, and put blocks each side of small cross-head.

If the small equalizing-valve in the end of main steam-valve is broken or taken out, would it interfere with the working of the engine on that side?

It would convert that side into a high-pressure engine. The work would be done by the low-pressure cylinder, the high-pressure piston would be nearly balanced; this would occur also when a head was broken out of the main steam-valve.

When running along and not using steam, always open the cylinder-cocks; this will prevent the low-pressure piston from creating a vacuum in high-pressure cylinder, and causing the packing to be picked up by the high-pressure piston-rod; this is injurious to the packings, when the engine is equipped with old style of starting-valve. (See Fig. 56.)

IMPROVEMENTS IN BALDWIN COMPOUND LOCOMOTIVE, VAUCLAIN SYSTEM.

Fig. 59 shows a means for preventing a vacuum being formed in the steam-passages of the L.P. cylinders. In some engines air-valves are placed in these passages; these valves are wing-valves held to the seat by the steam-pressure while running, but open when steam is shut off. Fig. 59 is a cross-section through main piston-valve and ports; also shows the starting or by-pass valve-piping and lever attachment and the position of the water-relief valves on L.P. cylinder. Instead of the usual air-valves the piston-valve rod is made hollow and bored full of holes in that

portion. In the interior of valve on the outer end of this hollow valve-stem is placed an air-valve which closes with the pressure of steam, but opens when there is no pressure. This valve is carried back and forth by the main valve-stem and this necessitates a stuffing-box at

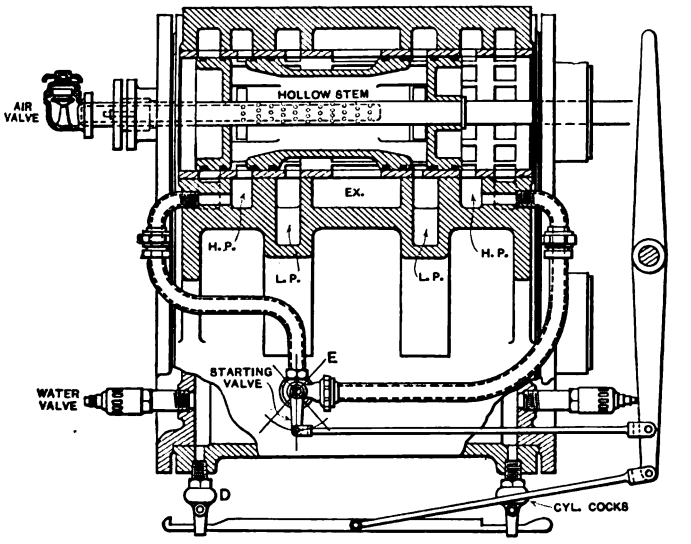

FIG. 59.

each end of the main valve-chest. The action is as follows: When the engine is drifting, using no steam, the air-valve drops away from its seat against a stop-pin provided in casing; the air can then pass into hollow stem and through holes into low-pressure passages, preventing a vacuum therein. The purpose of the by-pass valve is to equalize the pressure on each side of the high-pressure piston-head and admit live steam into the low-pressure cylinder when starting

away. This valve is attached to the cylinder-cock lever, as shown, but is often supplied with a lever to operate independent of the cylinder-cock lever.

Fig. 60 is a view showing general arrangements of cylinders, with section through steam-chest valve and ports, also position of piston-heads, valve, and by-pass or starting-valve. This is a very clear drawing of the construction of the Vauclain system or Baldwin compound, and should be valuable to the reader, as it shows the internal and external mechanism. The following are suggestions for running the Vauclain compound, as issued by the builders. In starting the locomotive with a train, place the reverse-lever in full forward position, throw the cylinder-cock lever forward, which operation opens the starting-valve and admits live steam into the low-pressure cylinder. The throttle is then opened, and as soon as possible, when the cylinders are free of water, and the train is under good headway, the cylinder-cocks and starting-valve should be closed. As the economy of a compound locomotive depends largely on its greater range of expansion, the engineer should bear in mind that in order to get the best results, he must use his reverse-lever. After starting-valve is closed, and as the speed of the train increases, the reverse-lever should be hooked back a few notches at a time until the full power of the locomotive is developed. If after moving the reverse-lever to the last notch, which cuts-off the steam at about half stroke in the high-pressure cylinder, it is found that the locomotive develops more power than is required, the throttle must be partially closed and flow of steam to cylinders reduced. On slightly

descending grades the steam may be throttled very close, allowing just enough steam in the cylinders to

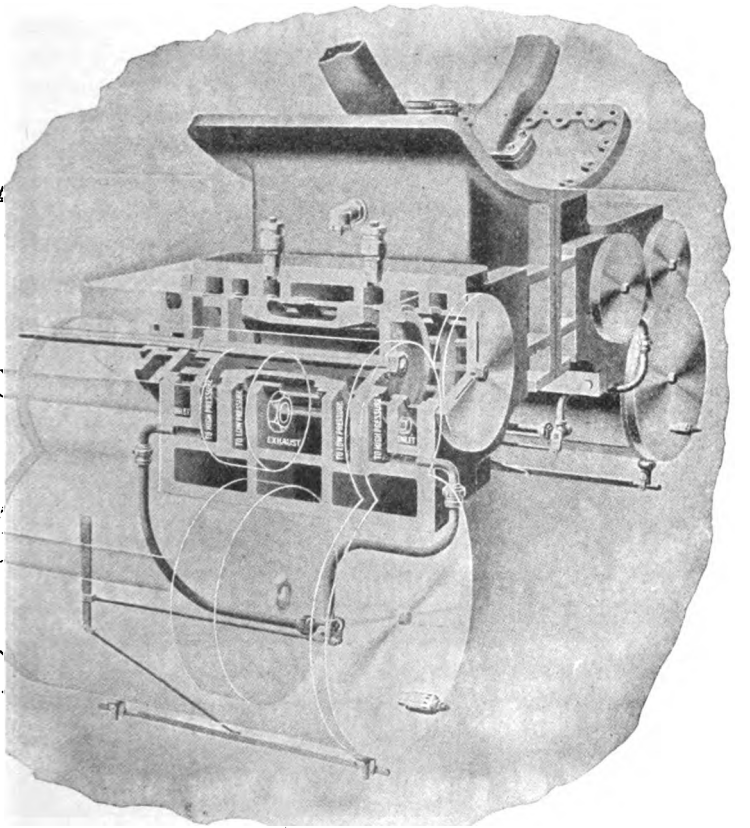

FIG. 60.—VIEW SHOWING GENERAL ARRANGEMENT OF CYLINDERS, WITH SECTION THROUGH STEAM-CHEST VALVE AND PORTS.

keep the air-valves closed. If the descent is such as to prevent the use of steam, close the throttle and move

reverse-lever gradually to the full forward notch and move the starting-lever to its full backward position. This allows the air to circulate either way through the starting-valve from one side of the piston to the other, relieves the vacuum, and prevents the oil from being blown out of the cylinder. On ascending grades with heavy trains, as the speed decreases the reverse-lever should be moved forward sufficiently to keep up required speed. If after the reverse-lever is placed in the full forward notch the speed still decreases and there is danger of stalling, the starting-valve may be used, admitting steam to the low-pressure cylinders. This should be done only in cases of emergency and the valve closed as soon as possible after the difficulty is overcome.

The reverse-lever should never be hooked up until after the cylinder-cock lever is in central position.

The starting device should never be used for any purpose than starting the train.

Placing the cylinder-cock lever in central position causes the engine to work compound.

Running with starting-valve open and with throttle partially closed, with reverse-lever hooked up in top notch, is wasteful, using an excessive amount of coal.

Do not open by-pass valve admitting live steam to low-pressure cylinder until the lever is in last notch.

TWO-CYLINDER OR CROSS COMPOUND FOR NORFOLK AND WESTERN RAILWAY.

In designing this type of compound locomotive, the essential feature sought was to provide an intercepting

and reducing mechanism which would permit the engine to work as a single-expansion engine until such

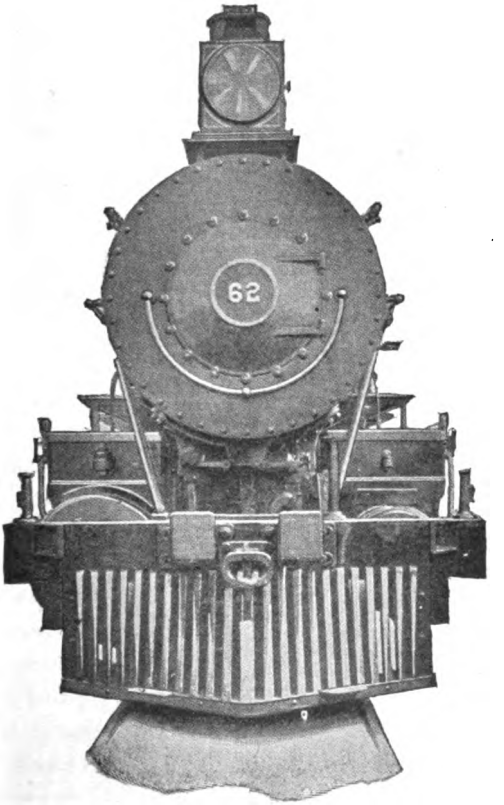

FIG. 61.—FRONT ELEVATION, TWO-CYLINDER COMPOUND.

time as the engineer desired to change it to a compound. To obtain this result, the normal condition of the parts employed is such that the engine will start at any point of the stroke and any position of the cranks.

To accomplish this, an intercepting-valve *A* (Figs. 63 and 64) is employed, consisting of two pistons connected by a distance-bar or rod, also a reducing-valve *C*, both of which are placed in the saddle-casting of the high-pressure cylinder.

The function of the intercepting-valve *A* is to divert the exhaust steam from the high-pressure cylinder either into the atmosphere when working single-expansion, or into the receiver when working compound, and is operated at will by the engineer.

The function of the reducing-valve is to admit live steam at reduced pressure into the receiver when the engine is working single-expansion, and also to close itself instantly when the intercepting-valve is changed to the position which causes the engine to work compound; it being evident that the receiver needs no live steam from the boiler when receiving its supply from the exhaust of the high-pressure cylinder. A further function of the reducing-valve is to regulate the pressure in the receiver so that the total pressure upon the pistons of the two cylinders will be equalized. The intercepting- and reducing-valves are both cylindrical in form, placed in bushings in which suitable ports are cut. The movement of the valves *A* and *C* in one direction is caused by steam-pressure against the action of suitable coil-springs. These springs cause a return movement when the steam-pressure is withdrawn. These valves are controlled by steam supplied through pipes *D* from the operating-valve in the cab.

The reducing-valve *C* is operated automatically by the pressure in the receiver when not closed permanently by the steam in the operating-pipe *D*. For

this purpose the port *E* is provided, connecting the receiver with the large end of the reducing-valve piston, under the poppet-valve *F*, which remains open

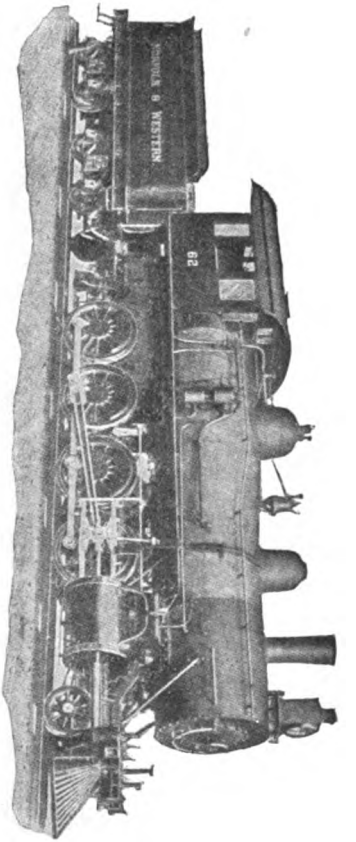

FIG. 63.—TWO-CYLINDER COMPOUND, NORFOLK AND WESTERN RAILWAY.

as long as the engine is working compound, the poppet-valve *G* being held closed by the same pressure, thus preventing its escape to the atmosphere. This

pressure, acting on the large end of the reducing-valve, causes it to close the steam-passage *H* between the live-steam passage of the high-pressure cylinder and

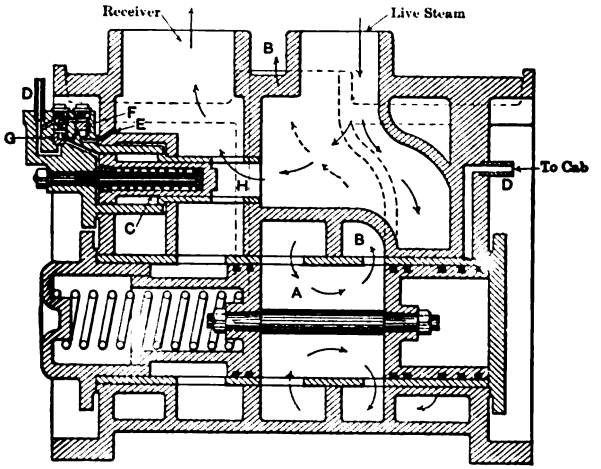

FIG. 63.—POSITION OF VALVE RUNNING AS A SIMPLE ENGINE.

the receiver, when the receiver pressure becomes excessive, and *vice versa* when deficient, the two ends of the reducing-valve being so proportioned that equal cylinder power will be given to both sides of the engine. When the engine is in its normal condition the lever of the small operating-valve in the cab is placed at the position marked "simple," and the engine is then in position to work as a single-expansion engine, the steam-pressure against the intercepting-valve and the large end of the reducing-valve being relieved, permitting the valves to assume (by the action of the springs) the position shown in Fig. 63. The ports of the intercepting-valve *A* stand open to receive

the exhaust-steam from the high-pressure cylinder and deliver it to the auxiliary exhaust-passage *B*, and through it to the atmosphere. At the same time the reducing-valve is wide open, connecting the live-steam passage *H* with the receiver, through which live steam enters and charges the receiver from which the low-

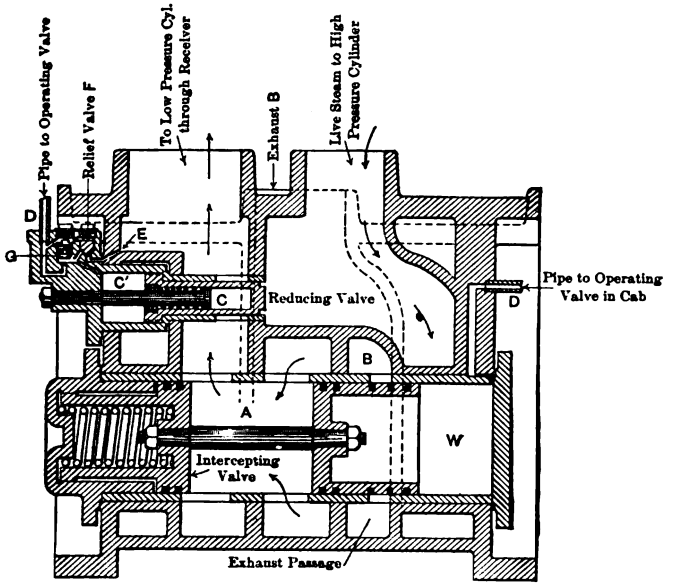

FIG. 64.—POSITION OF VALVE WHEN ENGINE IS OPERATING AS A COMPOUND.

pressure cylinder derives its supply. The receiver-pressure is governed by the automatic action of the reducing-valve, previously explained.

Thus the engine can be used as a single-expansion engine to make up trains and start them, and at the will of the engineer the operating-valve in the cab can

be moved to position marked "compound," which will admit steam to the supply-pipes *D*, thence to the cylinder *W*, and cylinder *C*, changing the intercepting-

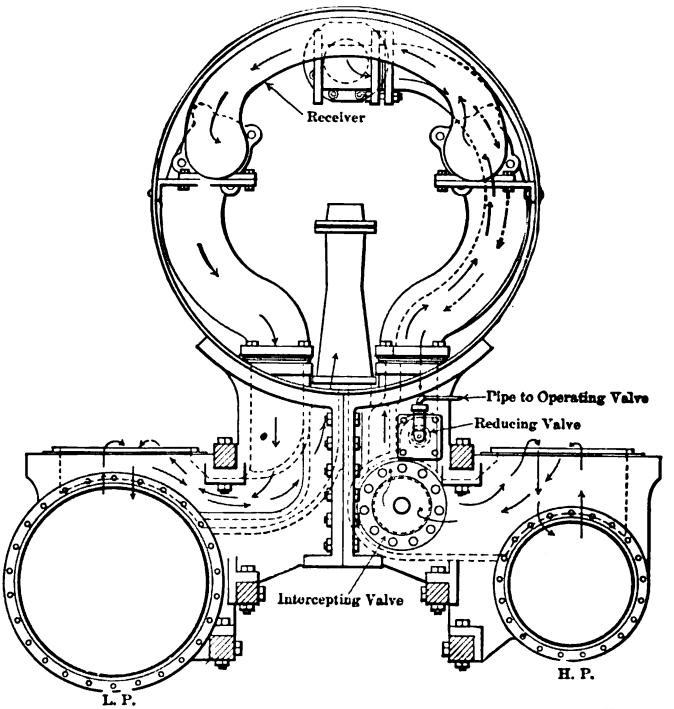

FIG. 65.—VIEW SHOWING RECEIVER AND STEAM-PIPE IN FRONT END.
The arrows show the course of the steam from H.P. to L.P. cylinder and to exhaust.

and reducing-valves instantly and noiselessly to position, as shown in Fig. 64, diverting the exhaust from the high-pressure cylinder to the receiver, instead of to the atmosphere, and closing the passage *H* between the live-steam passage and the receiver at the reduc-

ing-valve. All the parts liable to wear are made of the piston type, depending on packing-rings instead of ground-joints for prevention of leakage, and at the same time prevent the hammering action so common with valves of the poppet type automatically arranged.

THE TANDEM COMPOUND OF THE BALDWIN LOCOMOTIVE WORKS.

The Baldwin Locomotive Works build "tandem compound" locomotives. The following is a description of a decapod engine which has been built for the Atchison, Topeka and Santa Fé Railway from designs of John Player, Consulting Superintendent of Machinery of the Atchison, Topeka and Santa Fé Railway, and S. M. Vauclain, Superintendent of the Baldwin Locomotive Works.

In this locomotive there are four cylinders, a high- and low-pressure cylinder and cylindrical valve-chest on each side of the engine. The high-pressure cylinder is placed in front of the low-pressure cylinder, their axes being concentric. The high-pressure cylinder with its valve-chest and the low-pressure cylinder with its valve-chest are cast separately from each other and from the saddle. The steam-connection is made by a pipe from the saddle to the high-pressure valve-chest, and the final exhaust is made by a connection with the saddle from the low-pressure cylinder through a stuffing-box. The juncture of the cylinders and valve-chests to the saddle is therefore perfectly solid, as there is nothing to prevent the parts coming into solid contact. The connection between the two steam-chests is made in a similar manner, but

with bolts placed in such a way that they serve t
fasten the stuffing-box gland and at the same time hol
the valve-chambers together. The cylinders a
fastened together with ground-joints and held in co
rect alignment by having the flanges counterbored
that the intermediate head enters each casting.
glance at Figs. 66 and 67 will make clear this co
struction.

The valve is of the balanced-piston type. It
formed practically of two valves joined together on
rod. The high-pressure valve admits live steam to t
high-pressure cylinder, exhausts it through the cent
of the valve to the low-pressure valve, which admits
to the low-pressure cylinder and finally exhausts it
means of the valve through the stuffing-box connecti
to the saddle and out the stack. The valve-motion
connected indirectly with the links by a rock-shaft
in ordinary locomotive practice.

The pistons in the high- and low-pressure cylind
are on a continuous rod passing through the int
mediate head between the clylinders, and work sim
taneously.*

This form of compound is advantageous for extra
dinarily large engines intended to haul heavy loa
on steep grades. The guides, cross-heads, and ro
can be made quite light, and so maximum power c
be produced with minimum weight of reciprocati
parts.

An important feature of this type of compound
that the packing between the high-pressure and lo

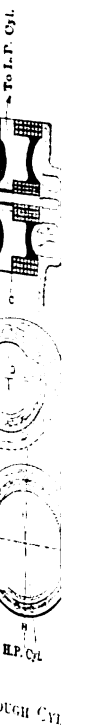

* See Fig. 108, page 201, for similar construction.

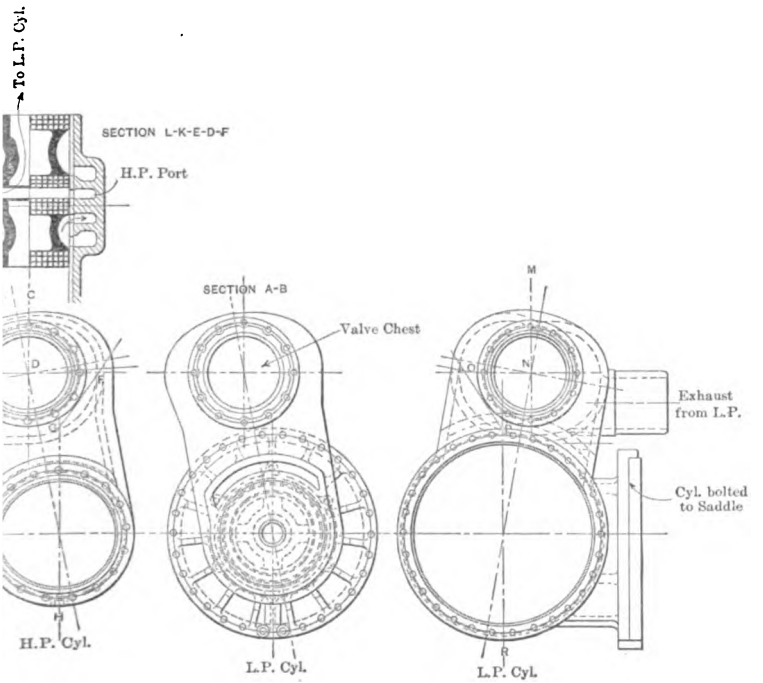

ROUGH CYLINDERS AND VALVE-CHEST. [*To face page* 128.]

pressure cylinders, which is of a type that will wear well, is in a position where it is protected from dirt and rust and will last for a long time.

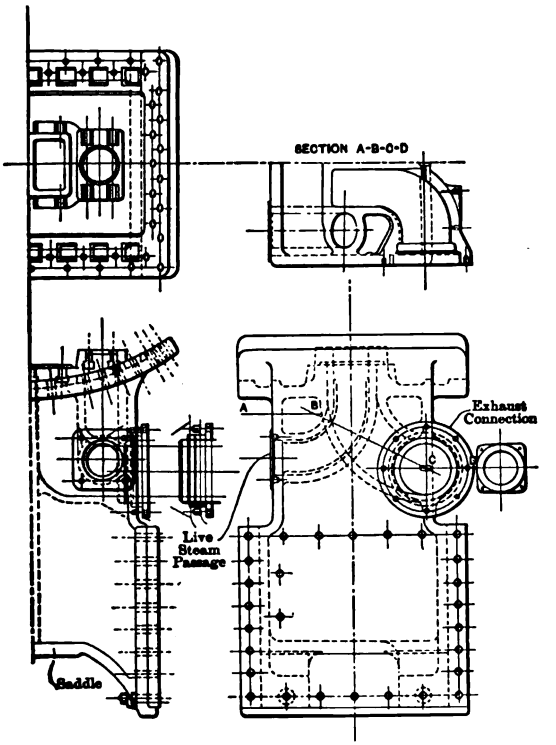

FIG. 67.—SHOWING LIVE STEAM AND EXHAUST PASSAGE THROUGH SADDLE.

The connection of the cylinders with the saddle and with each other is also a special advantage. The connection for the supply-pipe and for the exhaust from the cylinders to the saddle is made in such a way as

not to interfere in any way with the secure fastening of the cylinders with the frame. The connection between the valve-chambers of the high- and low-pressure cylinders is made through the stuffing-box so that it does not interfere with the certainty of the joint between the two cylinders. The studs which serve to hold the stuffing-box in this connection are also used to take up the reaction of the steam in the low-pressure valve-chest.

The high- and low-pressure cylinders are bolted together so as to secure the intermediate head and also the stuffing-box gland without any bolts or studs being placed in the interior of either cylinder, and so there is no liability of bolts or heads working loose and getting into the cylinders, while the stuffing-box is so fastened that the intermediate head can be taken down without removing the packing.

LOCOMOTIVE NO. 20000.

The beginning of the second year of the twentieth century witnesses the completion of seventy continuous years of locomotive building by the Baldwin Locomotive Works. The twenty-thousandth locomotive built by the Baldwin Locomotive Works has just been completed, and a contrast between the pioneer steam locomotive engine of this country and the twenty-thousandth is interesting and a departure from American practice. Locomotive No. 20000 is a compound ten-wheeled passenger engine, built for the Plant system of railroads, and completed in February, 1902.

The special features of construction are the Vauclain four-cylinder balanced system of compounding, the

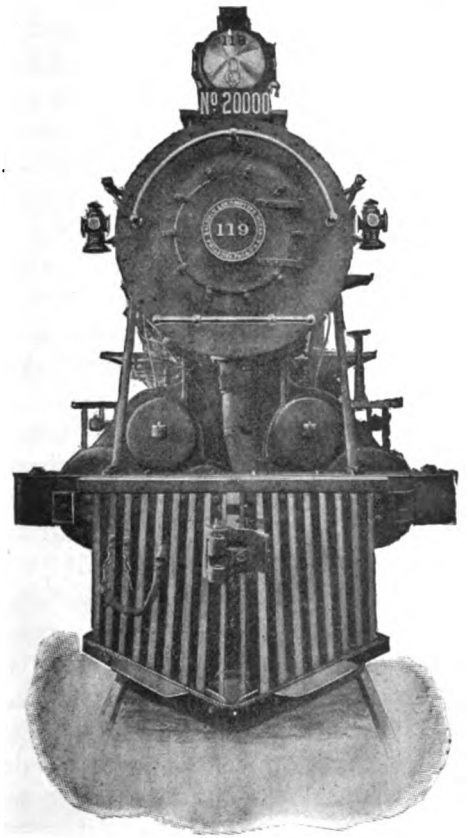

FIG. 68.

Vanderbilt boiler and tender, and the Symons boltless cast-steel tender-truck. The locomotive weighs, in working order, 176,510 pounds, 127,010 pounds of

which are on the driving-wheels; the tender weighs, loaded, 99,000 pounds. The total wheel-base of engine and tender is fifty-six feet eight inches; the wheel-base of the engine alone is twenty-eight feet four inches, of which the driving-wheels cover fourteen feet one inch.

Running-gear.—The driving-wheels are seventy-three inches in diameter; the centres are of cast steel with bronze hub-plates; the tires are made by the Standard Steel Works and are of open-hearth steel, three and one half inches thick, and held by shrinkage and shoulders; they are flanged five and one half inches wide. The main and parallel rods are in I sections and are of forged steel. The engine-frame is of wrought iron.

The engine-truck is a four-wheeled swing-bolster truck. The wheels are thirty-three inches in diameter, spoke-centres of cast steel, made by the Standard Steel Works. The tires are of steel held by shrinkage and double-lip retaining-rings. The journals are five and one half inches in diameter and ten inches long. The axles are of open-hearth steel.

Pilot, Stack, and Cab.—The pilot is of seasoned oak, well ironed, and with a bumper of oak. It is fitted with a Janney M. C. B. coupler with hinged head.

The smoke-stack is of cast iron fifteen inches in diameter, of straight pattern. The distance from the top of the rail to the top of the stack is fifteen feet six inches.

The cab is made of southern yellow pine well seasoned. It is fitted inside, besides the engineer's

and fireman's seats, with time-table pockets, torch rest, pockets for flags and torpedoes, Golmar automatic bell-ringer, one Hancock composite injector Nos. 9 and 10, Nathan triple-sight feed-lubricator, Crosby vertical reading-gauge, six-and-three-quarter-inch face, having black dial with one large pointer to indicate steam-pressure boiler is carrying and one smaller pointer to indicate varying pressures; also with glass water-gauge and lamp.

Boiler and Fire-box.—The boiler and fire-box, Figs. 69 and 72, embody the invention of Cornelius Vanderbilt, M.E. The boiler-sheets are of steel, seventeen thirty-seconds and eleven sixteenths inches thick, having longitudinal butt-seams, sextuple riveted, and with welded ends. The lagging is of sectional magnesia and the jacket is of American planished iron. The boiler is sixty-two inches in diameter at the smoke-box end and is designed for a working steam-pressure of 200 pounds. It is subjected to a steam test of 250 pounds and a water test to one third above the working-pressure. The boiler carries one helmet-shaped dome thirty inches in diameter, placed centrally, and an auxiliary dome, near the cab, furnished with two Coale three and one half inch muffled safety-valves, encased with one relief-valve set to 200 pounds, and a chime whistle. The smoke-box is extended, with spark-hopper, netting, and deflecting plate, and has a cinder valve-spout extending below the truck-axle. The boiler contains 341 tubes of No. 11 wire gauge, two inches in diameter and fifteen feet long, made of solid drawn high-carbon steel. The tubes are swaged for copper ferrules at one end. They are

prossered at the fire-box end, rolled at front end, and beaded on both ends.

The total heating surface of the boiler is 2793 square feet, of which 128 square feet are in the fire-box and 2665 square feet are in the tubes.

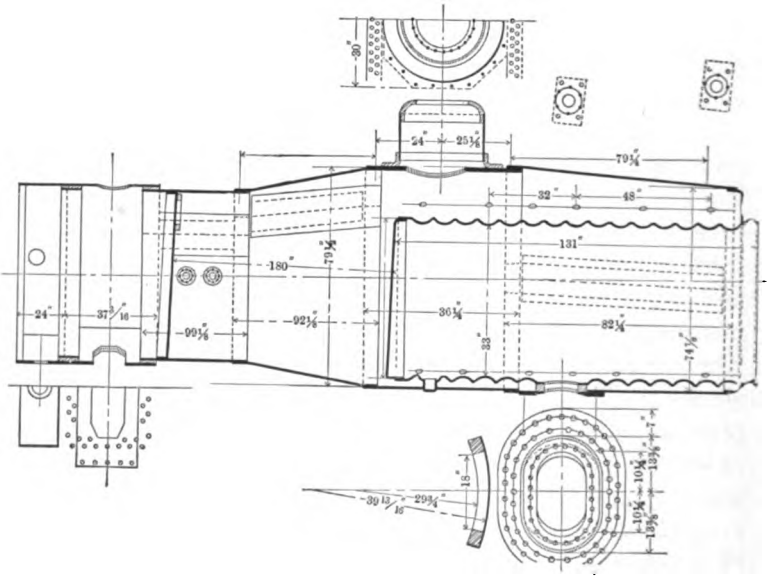

FIG. 69.

The fire-box, which is cylindrical in form with annular corrugations, is the special feature of the Vanderbilt boiler. It is of carbon steel, 131 inches long and fifty-five inches diameter inside, welded and corrugated by The Continental Iron Works of Brooklyn. It is suspended within the cylindrical shell of the boiler with its axis eccentric to that of the boiler, in order to allow suitable steam-space above the crown. The principal

point of suspension is at the rear, where it is riveted to the back head of the boiler; it is also supported at the bottom by the reinforcing-rings around the openings provided for cleaning the furnace, otherwise the fire-box is entirely disconnected from the boiler-shell.

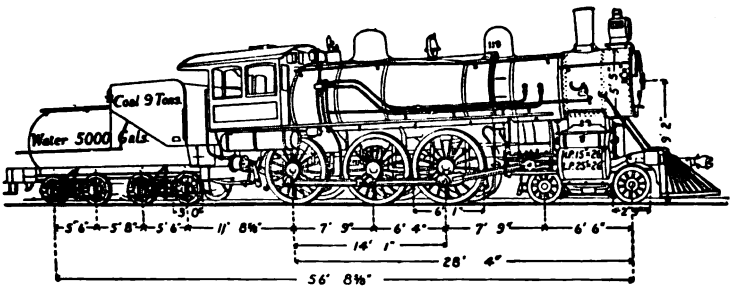

FIG. 70.

By this construction all the flat surfaces ordinarily encountered in a locomotive boiler are eliminated, and the use of stay-bolts is entirely avoided. By doing away with the stay-bolts a saving is made not only in the stay-bolts themselves, but the weakening of the plate, by reason of corrosion around the stay-bolts, especially where bad water is encountered, is avoided. By disconnecting the fire-box from the outer shell, as is done in the Vanderbilt boiler, the destructive effects of contraction and expansion are reduced and the need of stay-bolts is entirely avoided.

The grate is designed for burning soft coal and contains 27.27 square feet. The fire-box contains a fire-brick bridge-wall against which the flames and products of combustion impinge and which prevents the flues from becoming choked by coal and cinders. The

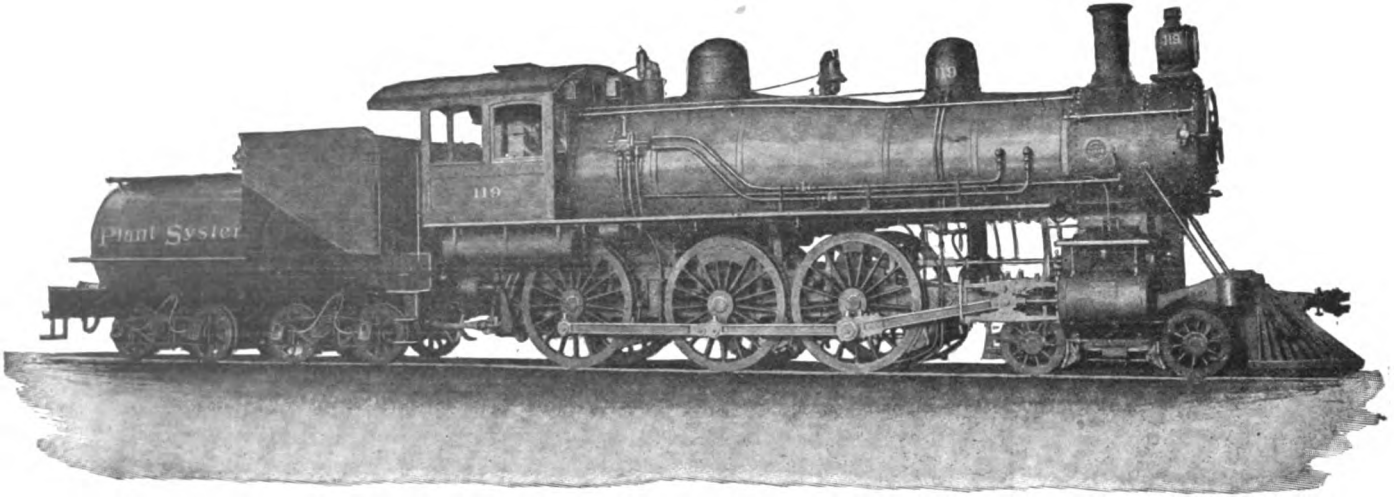

FIG. 71.—VAUCLAIN FOUR-CYLINDER COMPOUND LOCOMOTIVE, BALANCED SYSTEM. 136

grate is made to rock in two sections and the ash-pan has dampers front and back.

Tender.—The tender is also constructed from designs

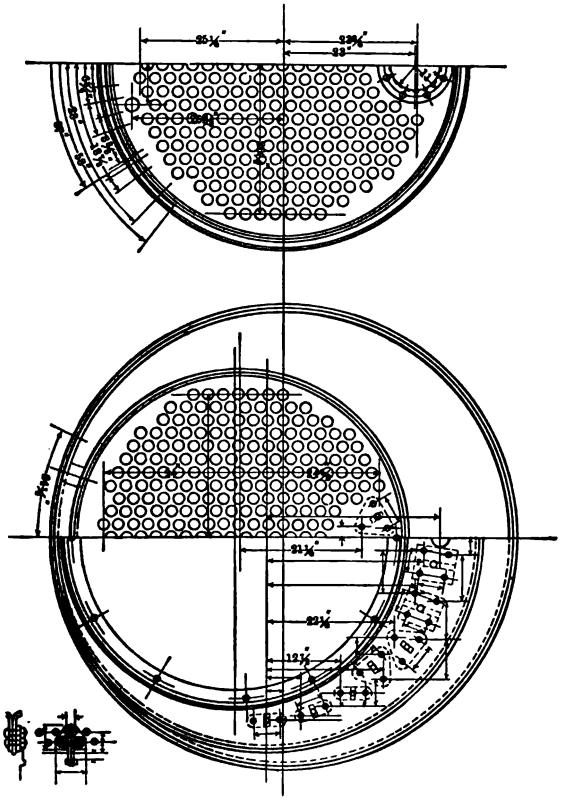

Fig. 72.

of Mr. Vanderbilt. The circular form of tank is introduced principally on account of the economy of construction. Besides this advantage, however, it is found that the strength is greater in proportion to the weight, and that the capacity for fuel in proportion to the

amount of water is larger than in the ordinary type, and the disposition of the fuel is more convenient. The tender carries nine net tons of coal and 5000 gallons of water. The frame is of bulb angle iron.

There are two boltless cast-steel four-wheeled trucks constructed from designs of Mr. W. E. Symons, Superintendent of Motive Power of the Plant system of railroads. The side frame of the truck is of steel cast in one piece; the boxes are slipped into their openings and secured in place by keys. The truck-frame is fastened to the bolster in a similar manner. The only nuts used are those at the ends of the keys. The wheels are thirty-six inches in diameter with cast-steel plate-centres and steel tires, held by shrinkage and double-lip retaining-rings. The axles are of open-hearth steel and the journals are five inches in diameter and nine inches long. They are fitted with an attachment for applying water for cooling the bearings. There are heavy safety chains between the engine and tender and at the rear of the tender. Both trucks have Westinghouse brakes; the tender is also equipped with a hand-brake. The tender is equipped with a Janney M. C. B. coupler with spring-buffer.

Accessories.—The locomotive is equipped with all the modern labor-saving devices and conveniences to facilitate operation. The headlight is the Pyle National Electric Headlight with a deep reflector eighteen inches in diameter. The dynamos for the headlight are located on top of the boiler, near the front of the cab. These dynamos also supply power for lights in the cab and under the foot-board to facilitate oiling at night.

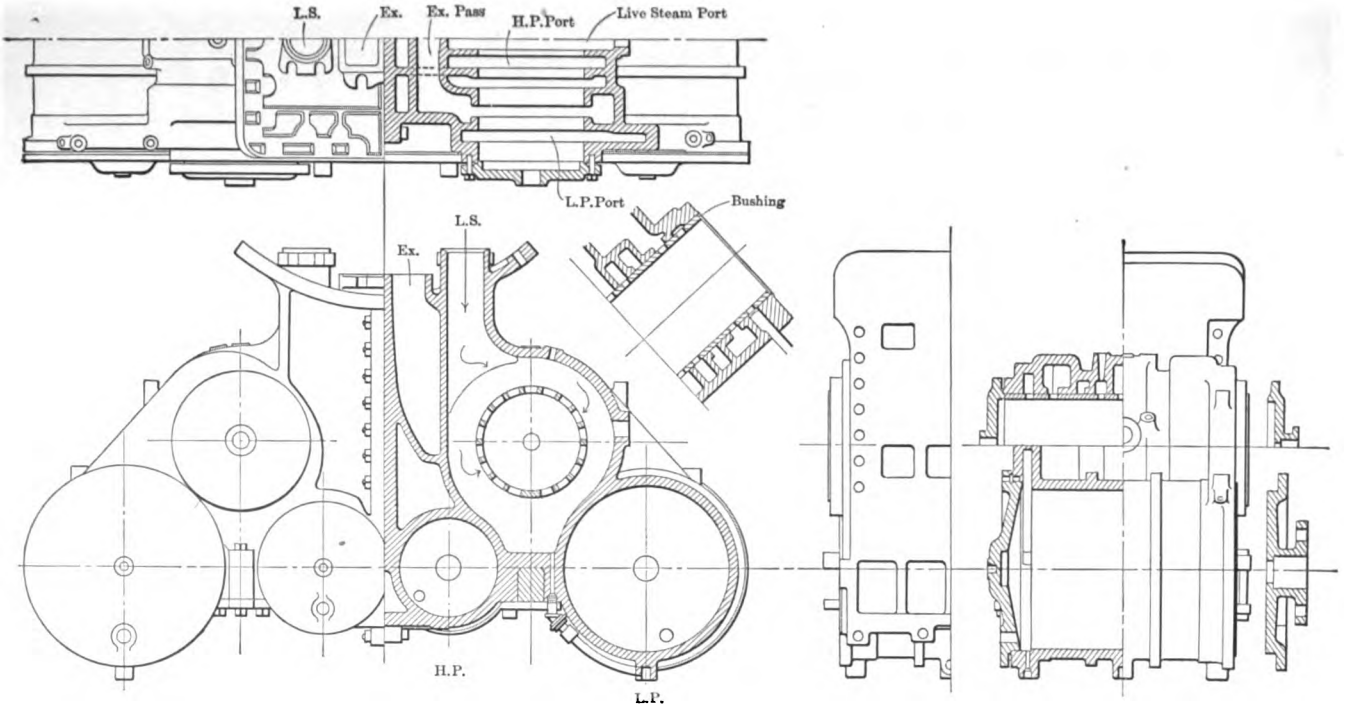

FIG. 73.—CYLINDERS AND SADDLE, FOUR-CYLINDER BALANCED COMPOUND.

A Westinghouse-American outside equalized air-brake operates on all driving-wheels and is connected with a nine-and-one-half-inch air-pump on the left side of the boiler. The engine-trucks are also equipped with an American engine-truck brake. Passenger trains hauled by the locomotive are heated from the engine by the Gold system of steam-heating.

Cylinders.—The most interesting feature of locomotive No. 20000 is the latest form of the Vauclain system of compound cylinders. The cylinders are four in number, two high-pressure and two low-pressure. The axes of the four cylinders are parallel and in the same horizontal plane. The saddle is cast in two pieces, a high- and low-pressure cylinder and valve-chest in each piece. The low-pressure cylinders lie outside the frame and the high-pressure cylinders lie inside the frame on each side of the locomotive. The high-pressure cylinders are fifteen inches in diameter and the low-pressure cylinders twenty-five inches in diameter; the length of the piston-stroke is twenty-six inches. A valve of the balanced-piston type, fifteen inches in diameter, controls the passage of steam to each pair of cylinders. (See Fig. 74.)

The valves travel five inches and have an outside lap of one inch for the high-pressure and seven eighths inch for the low-pressure cylinders; they have an inside negative lap of one quarter inch for the high-pressure and three eighths inch for the low-pressure cylinders; the lead of the valves in full gear is H.P., no inches, L.P., one-eighth inch. In transferring the motion from the links to the valve-rod, the links and the end of the valve-rod are attached to the arms of an inter-

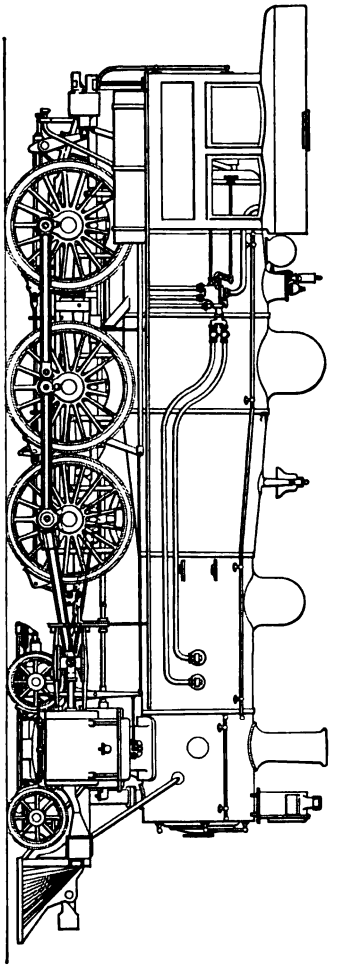

FIG. 74.—ELEVATION OF LOCOMOTIVE 20000.

mediate rock-shaft, the motion being indirect. The eccentric throw is $5\frac{1}{2}$ inches.

The valve-motion and connection are thus practically the same as in ordinary single-expansion locomotive practice, a single set of valve-motion actuating each

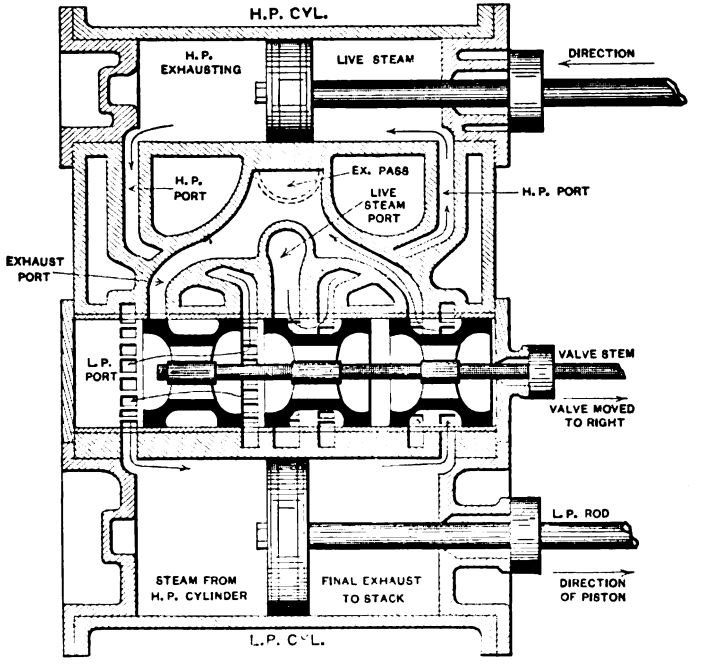

FIG. 75. — DIAGRAM OF VAUCLAIN BALANCED COMPOUND. Section through cylinders and valve showing ports.

side of the engine with its high-pressure and low-pressure cylinders.

Fig. 75 is a diagram of the cylinders, valve, valve-chest, and ports, showing the valve in full port-open

position, and the piston-heads in the centre of cylinders. The diagram is not made as a working-drawing, but is designed to show the two cylinders and the ports leading to and from each cylinder, with the cylinders placed each side of valve-chamber (for working-drawing see Fig. 73). The valve-chamber has seven ports therein, as shown. The two end ports lead to the low-pressure cylinder. The two ports, one at each end of chest, next to low-pressure ports are the final exhaust-ports leading to exhaust-passage in saddle. The central port is the receiving-port or live-steam port. The ports on each side of the centre port are the high-pressure ports leading to the high-pressure cylinder. These ports are very clearly shown in the diagram. As will be understood, the piston-heads in these cylinders move in opposite directions. The valve is made up of three parts or pistons, with a depression between each end; these three parts are fastened to a valve-stem, as the drawing shows; between each section a space is left open. The sections have four spring-rings, two at each end, to make them steam-tight. This valve works in a bushing fitted into the valve-chamber in saddle, and the ports are bridged as usual with piston-valves, to prevent the rings from dropping into port when travelling over. In the position shown in Fig. 75 the action is as follows: The middle section of valve has uncovered the high-pressure port to the right and opened it to the central port, and live steam is flowing into the high-pressure cylinder, driving the piston-head to the right. That section of valve to the extreme right has uncovered the low-pressure port and put it in communication with the

final exhaust-port, and exhausted the steam from the right-hand end of low-pressure cylinder. The section of valve to the left has opened the low-pressure port to left-hand end of low-pressure cylinder, and at the same time the middle section has opened the high-pressure port to the centre of valve. This then permits the exhaust steam from the left-hand end of high-pressure cylinder to flow through the centre of valve and into the low-pressure port at left-hand end of low-pressure cylinder, moving that piston-head to the right and in opposite direction to the high-pressure piston-head. The arrows and lettering show very clearly the operation. This action is the same for both ends of cylinders. Fig. 76 is a full view of the valve and rings.

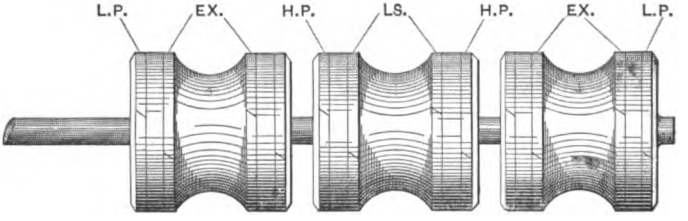

FIG. 76.—PISTON-VALVE OF FOUR-CYLINDER BALANCED COMPOUND.

The four piston-rods are of the same size, as small as possible, made of solid steel, and the pistons are fitted with snap-rings and Peacock packing-ring joints. Each of the four pistons is connected with a separate cross-head, of the alligator type, working in separate parallel guides. The piston-rods and valve-stems are all fitted with United States metallic packing.

The valve admits steam to the high- and low-pres-

sure cylinders in such a manner that the high- and low-pressure cross-heads work in opposite directions, starting their stroke at opposite ends of the guides.

The cross-heads are of open-hearth cast steel, with bronze shoes. The guides are of steel. The low-pressure cross-head and guides on each side of the locomotive are located outside the frames, and the cross-head is coupled with the main driving-wheel, which in this locomotive is the front wheel, by a connecting-rod, as in ordinary practice. In addition the main axle has two cranks, set at right angles to each other, one on each side of the centre of the locomotive; and each crank is coupled to a cross-head of one of the high-pressure pistons. The crank on the axle and the crank-pin in the wheel for the corresponding high- and low-pressure cylinders are set at an angle of 180 degrees; the two axle-cranks being set at 90 degrees, brings the action of each high- and low-pressure cylinder on one side of the locomotive quartering with the equivalent cylinder on the opposite side.

Fig. 77 is a diagram of the valve-motion, as has been stated; this is an indirect motion, using the rocker-arms. The peculiar feature is that the eccentrics are not on the same axle as the cranks, as in usual construction. This engine has three pairs of driving-wheels, as 1, 2, 3 in diagram. The axle marked number 1 is the main driving-axle and is the crank-axle for the high-pressure rods. As there is no room for eccentrics on this axle, the eccentrics are placed on the axle marked number 2 or middle drivers, the links being immediately back of the main driving-axle. The distance from link to valve being long,

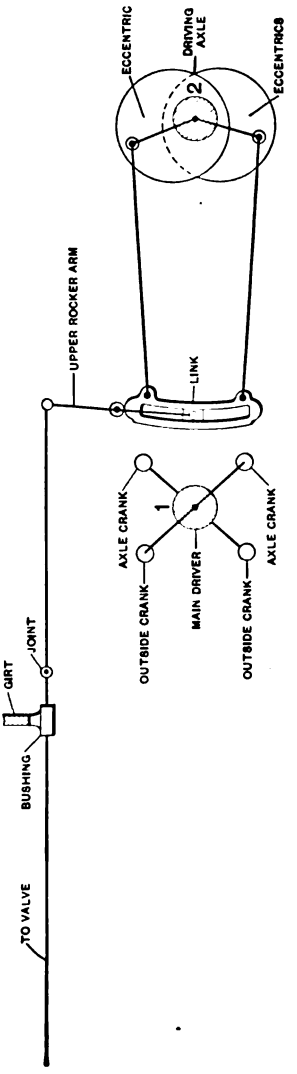

FIG. 77.—DIAGRAM OF VALVE-MOTION OF FOUR-CYLINDER COMPOUND.

the valve-rod is in two sections, and is jointed as shown. Immediately ahead of the joint, the rod is carried in a bushing in the yoke. Fig. 78 shows the

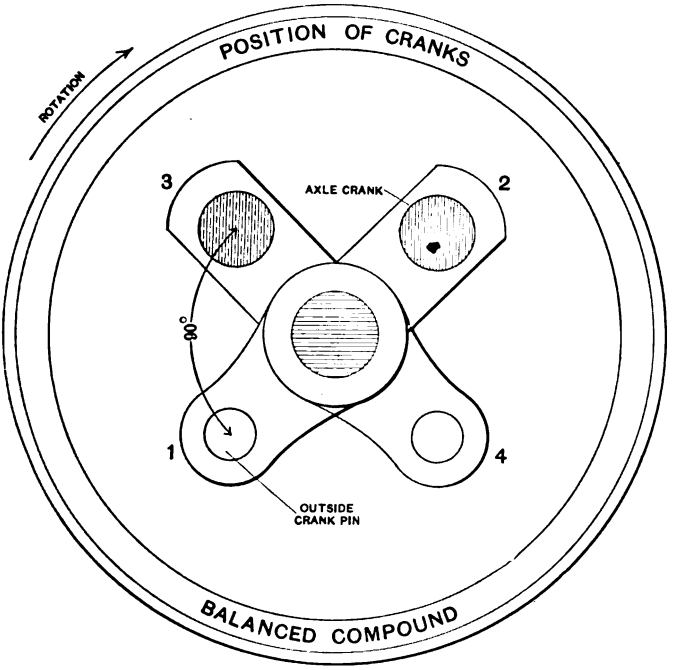

FIG. 78.

position of cranks to one another. Number 1 is the crank-pin on driving-wheel of right side of engine, looking to the right. Number 2 is the axle-crank of right side. Number 4 is the crank-pin on driving-wheel, left side. Number 3 is the axle-crank on the left side. Numbers 2 and 3 are connected to high-pressure cylinders; numbers 1 and 4 to the low-

pressure cylinders. In this case the leading engines are on the right-hand side.

The axles of all driving-wheels are of steel. The crank-axle (Fig. 79 is of open-hearth steel, manufac-

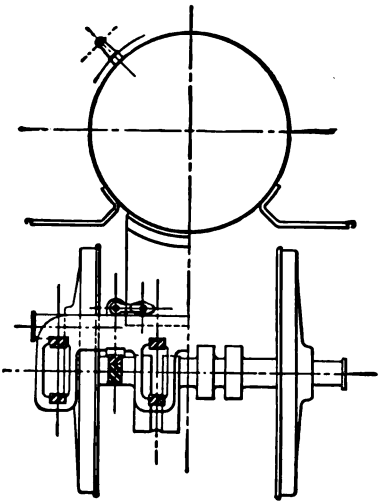

FIG. 79.

tured by the Bethlehem Steel Company. The cylinders are drilled for indicators; the steam-passages in the cylinders are so designed that there are no pockets where water can collect.

Certain advantages are expected of this system of compounding, besides the recognized ones of economy of fuel and steam. The most important one is the fact that by a crank-axle connected with pistons travelling in opposite directions from each other an almost perfectly balanced engine is secured. The main driving-wheels are practically self-counterbalanced by the positions of the inside cranks with relation to the out-

side wrist-pins and their respective connections. It is only necessary to counterbalance such portions of the main wheels as are not sufficiently balanced by the cranks. The other driving-wheels are counterbalanced each for its own rotating weight. As the reciprocating

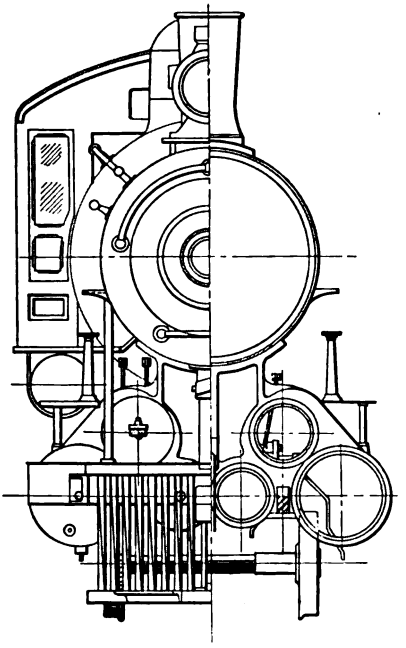

FIG. 80.—CROSS-SECTION OF LOCOMOTIVE 20000.

weights of the high- and low-pressure pistons and their connections move in opposite directions at the same time, they are within a few pounds of each other and the locomotive is only out of balance to that small extent. Thus we have a machine that will allow the maximum load on the driving-wheels without detriment

to the track, there being no unbalanced rotating weight in the wheels to either tend to lift the wheel or exert additional weight on the rail. As an offset to the objections pertaining to a crank-axle, and the duplication of guides, cross-heads, and main rods, there is no variation in the vertical stress upon the rails, and consequently no need of allowing for it in the weight put on the driving-wheels, the boiler can be made as large as the engine will carry, the speed of the locomotive is increased, and it can attain its maximum speed with minimum risk. This combination of the large boiler with the perfection of balance makes the locomotive well adapted for drawing fast, heavy passenger trains.

REVIEW OF VAUCLAIN BALANCED COMPOUND LOCOMOTIVE.

How does the engine differ from the previous four-cylinder compound engine built by Baldwin ?

In both engines four cylinders are used, two high- and two low-pressure cylinders. The one engine has the two cylinders one above the other on the same side, with the piston-rods connected to one cross-head and using one main rod and crank-pin to a side. In the engine just described there are two cylinders to a side, one high- and one low-pressure, which are placed on a horizontal line with each other, each side of the frame, with a valve common to both cylinders, as in the former case.

Are there more than two connecting-rods ?

There are four connecting-rods to this engine, two inside and two outside rods, four cross-heads, and four pairs of guide-bars.

Why are four connecting-rods used ?

Each piston-rod is connected to its own main rod and crank-pin and not as in the previous engine, where the two piston-rods are connected to one cross-head and main rod.

What is the form of the main driving-axle in this engine ?

It is a crank-axle having two cranks formed therein, and these cranks form part of the axle, and the portion forming the pin or part on which main rod bears is very large in diameter to prevent weakening of the axle. These cranks are set at 90 degrees with each other.

What cylinders are connected with these cranks ?

The high-pressure cylinders in this engine; the low-pressure cylinders being connected to crank-pins on outside of wheels.

What are the positions of the cranks in relation to each other ?

The crank-pins on driving-wheels have an axle-crank directly opposite, and the crank-pins are set at 90 degrees with each other, as in usual construction (see Fig. 79). When crank-pin marked 1 is on the quarter the axle-crank marked 2 is also on the quarter, while crank-pin and axle-crank marked 3 and 4 are on centre. (See Fig. 78 for numbers.)

How do the piston-heads travel in relation to each other in the cylinders ?

By this construction they move in opposite directions.

Does it require a complicated valve-motion to operate these piston-heads ?

It does not require any extra motion other than the usual link-motion. The valve is so constructed that a single movement operates both cylinders.

What is the position of the valve-chest?

It lies above and between the high- and low-pressure cylinders.

How many ports are in this chest?

There are seven ports: two high-, two low-pressure ports, two exhaust, and one receiving or live-steam port.

In what position are these ports in the chest?

The two end ports are the low-pressure ports to low-pressure cylinder. The ports next to the low-pressure ports are the final exhaust-ports to stack. The central port is the live-steam or receiving port; and the ports on each side of central port are the high-pressure ports to high-pressure cylinder.

Describe the valve.

This valve is what is called a piston-valve and is composed of three sections fastened to one stem. These sections have a central depression with packing-rings at each end (see Fig. 76). The central section controls the steam to and from the high-pressure cylinder and live-steam port. The two end sections control the steam to and from the low-pressure cylinder and the exhaust to stack.

In this locomotive the main driving-axle is the forward one; on which axle are placed the eccentrics?

The eccentrics are placed on the second axle in this engine, due to the cranks on axle of main driver. This feature differs from the usual construction, where the eccentrics are on the main driving-axle.

How is the power of this engine increased to start away or on grades?

The high-pressure cylinder piston-head is balanced

by starting-valve admitting steam to each end of high-pressure cylinders and live steam flowing to the low-pressure cylinders.

Would the breaking of a main rod prevent running of this engine with the three main rods up?

This engine can be run by removing the broken parts and taking piston-head out of cylinder, putting a board over the stuffing-box to prevent steam from escaping. The engine would be out of balance and should be run carefully.

If the high-pressure main rod were broken, what would be the action in the cylinders when parts were taken down as described?

The engine would be run as a simple engine with the low-pressure cylinders, with the piston-head balanced in high-pressure cylinder on good side.

If it were a low-pressure rod, what would be the effect in cylinders, and what should be done?

The low-pressure head would be taken out, proceeding as in former case; the engine would then be a compound on one side and high-pressure on the disabled side; or it could be used as a high-pressure engine on both sides by balancing the high-pressure cylinder on good side, using the low-pressure with live steam. In this case the one side would be stronger than the other. This illustrates the flexibility of this engine.

With a broken valve-stem or rod the valve should be placed in centre of travel, closing all ports, as with the usual D valve; disconnect both main rods on that side, block piston-heads in back end of cylinders, and go in with one side.

With the two end sections of valve taken out could the engine be run ?

Yes; in this case the middle section of valve will control the high-pressure cylinders; only the low-pressure pistons would be travelling in the cylinders without power, as the exhaust from the high-pressure would escape into stack. Care would have to be taken to see that there was sufficient lubrication of low-pressure cylinder to prevent cutting.

What would be the effect on engine with the forward section of side rods broken ?

The engine would have to be pulled in.

Why ?

Because the eccentrics are on the second pair of driving-wheel axles, and they receive their power from main drivers through the side rods.

Could the engine run with one forward section of side rod taken down ?

No; because if the other side were left on, the second and third pair of drivers would have to be driven by the good side, and, not having the other forward section on the second and third pair of drivers, they would be liable to revolve in either direction from the centre.

With an end section of valve broken or taken out, what would be the effect on that side ?

The engine would work as a high- and low-pressure on that side; one end of low-pressure cylinder would have power, while the other would have no power, because the exhaust-steam from the high-pressure cylinder would escape to stack.

What effect would this have on the exhaust ?

There would be three mild beats with one sharp beat

to one revolution. The sharp beat being the exhaust from high-pressure cylinder, and from that end from which the section of valve was taken or broken. This would cause the engine to work irregularly.

Why is it necessary to take out the piston-heads of disabled engines when main rod is taken down in order to run with the remaining rods up?

If it is the L.P., the piston-head would prevent the steam from one end of H.P. to escape to exhaust-pipe. If it were the H.P., steam would flow from one end of H.P. cylinder to the L.P. cylinder only, except when starting-valve was opened. The best way is to take down both main rods on disabled side when one is broken, running in with good side.

The above questions and answers are given to show what might happen, and what could be done to meet emergencies.

THE SCHENECTADY COMPOUND LOCOMOTIVE.

Probably the most interesting feature of this engine is the new starting gear and intercepting-valve apparatus, invented by Mr. A. J. Pitkin, Superintendent of the Schenectady Locomotive Works. This we show in considerable detail. Figs. 81 and 83 show the intercepting-valve open; that is, in the position before the engine starts. Fig. 82 shows the intercepting-valve closed, or in the position at the time of the initial movement.

The construction of this valve is as follows (see Figs. 81, 82, and 83).

There are two pistons *A A* at one end of the single

stem *B*, which moves to and fro in a cylindrical chamber having three openings. Two of these openings,

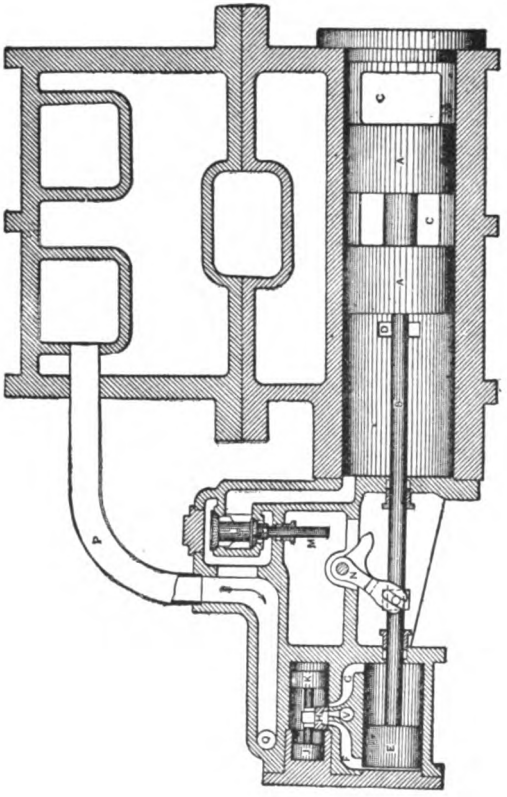

Fig. 81.

C C, lead to the receiver and to the low-pressure steam-chest, as shown in Fig. 81, and it is the office of the pistons *A A* to open and close these large openings and prevent the steam in the low-pressure steam-chest

from entering the receiver when it is not wanted there. The other opening, *D*, in this cylinder (see Figs. 81 and

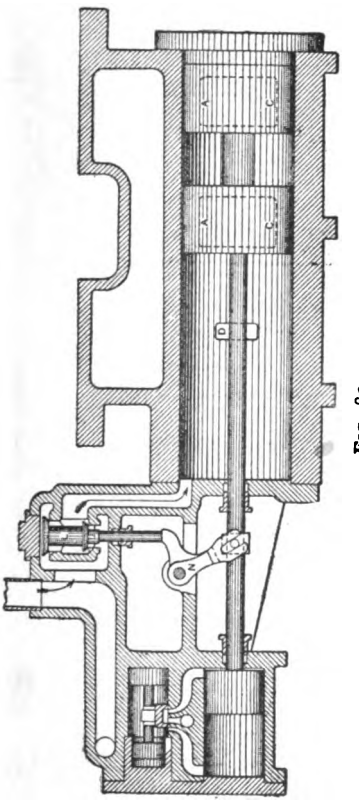

FIG. 82.

82) connects the intercepting-valve cylinder with the low-pressure steam-chest.

So far we have described the intercepting-valve proper. The remaining portion of the mechanism is

the apparatus for driving and connecting the intercepting-valve. It is constructed as follows:

On the end of the stem *B*, which passes through a

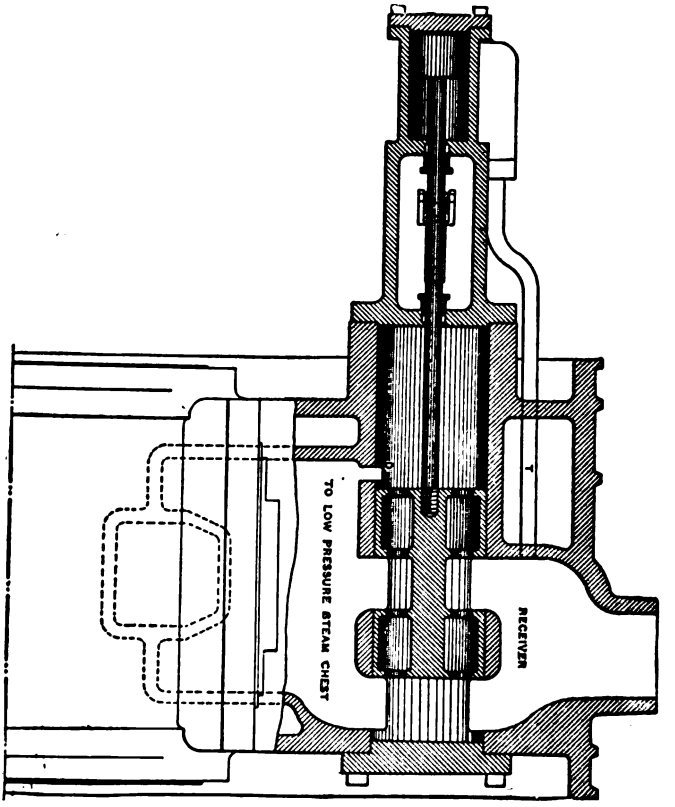

FIG. 83.

stuffing-box in the end of the intercepting-valve chamber, there is a piston *E*, which moves in a small cylinder having ports *F* and *G*, one at each end. These ports lead to a valve-seat, on which is a plain D valve

not unlike the ordinary locomotive slide-valve. This slide-valve is moved to and fro by means of a double piston with a stem between, shown at *J* and *K*. These pistons are of different diameter, *K* being larger than *J*, and as they move to and fro they carry with them the slide-valve. The office of this portion of the mechanism is to move the intercepting-valve *AA* to and fro, as desired.

The third part of the device consists of a balance poppet-valve *L*, which is placed in the path of steam coming direct from the boiler to the low-pressure cylinder to assist in starting. This valve has an extended spindle *M* on the lower side, and is lifted by means of a bell-crank *N*, which is driven by means of a trunnion on the intercepting-valve stem *B*. As the stem *B* passes to the right the valve *L* is lifted, and as it passes to the left the valve *L* is allowed to fall. Fig. 62 is a detail of the pipe connections and passages leading to the pistons *J K*, the office of which will be de-

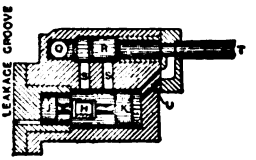

FIG. 84.

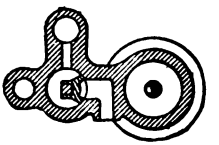

FIG. 86.

scribed in what follows. Fig. 85 shows the location of the intercepting-valve and its parts in relation to the cylinders and steam-pipes. Fig. 86 is a section through the side-valve *H*, showing that it has a cylindrical seat. The operation of this valve is as follows:

The engineer opens the throttle as usual. Steam passes into the high-pressure steam-pipe *O*, Fig. 85, and passes through the pipe *P*, which is tapped into the

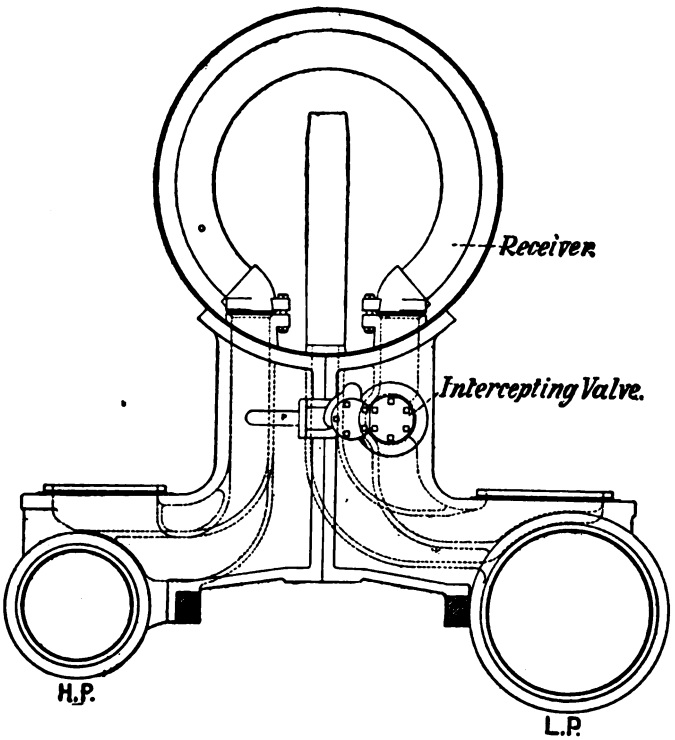

FIG. 85.

side of the saddle to the apparatus which actuates the intercepting-valve, as shown in Figs. 81 and 84. It passes down through the passage *Q*, through the small ports *S S*, between the pistons *J* and *K*. *K* being larger

than *J*, it has a greater total pressure; hence the pistons move to the right and carry the slide-valve with them. This opens the port *F*, and allows the steam to pass on the left side of the piston *E*, and forces it, together with the intercepting-valve *A A*, to the right until it is in the position shown in Fig. 82 with the *C C* passages closed. The position of the pistons *J K* and the slide-valve *H* at this time are shown in Fig. 82.

During the foregoing operation, as the intercepting-valve stem *B* moves to the right it carries with it the bell-crank to the position shown in Fig. 82, thus lifting the balance poppet-valve *L*, and admitting steam, as shown by the arrows, Fig. 82, into the intercepting-valve cylinder, from whence it passes out through the opening *D* into the low-pressure cylinder steam-chest, and in this way steam is admitted direct from the boiler to the low-pressure steam-chest always just before the engine starts.

As soon as the engine has started, and there is an exhaust into the receiver from the high-pressure cylinder, steam passes from the receiver through the pipe *T*, shown in Fig. 83, to the passages leading to the small slide-valve *H*, as shown in Fig. 84. This pressure acting on the right-hand side of the larger piston *K*, through the smaller passage *U*, overcomes the pressure on the other side of this piston *K*, and the pistons *J* and *K* move to the left, carrying the slide-valve *H* with them. This movement opens the steam-passage *G*, Fig. 81, and the exhaust-passage *V*, and admits steam to the right side of the piston *E*, and drives it to the left, and with it the intercepting-valves *A*, thus opening the passages *C* and the receiver to the low-pressure

steam-chest. At the same time the bell-crank *N* is moved to the left, and the valve *L* is allowed to drop into the position shown in Fig. 81, thus cutting off the connection between the boiler and the low-pressure steam-chest.

After this the engine works in the well-known way of the two-cylinder compound, that is, by taking steam into the high-pressure cylinder, discharging it into the receiver, taking it out of the receiver into the low-pressure cylinder, and discharging it into the atmosphere.

ACCIDENTS WITH THE SCHENECTADY COMPOUND LOCOMOTIVE AND INTERCEPTING-VALVE.

When a main rod of the high-pressure engine is broken or disconnected, what should be done to bring the engine in or continue the trip?

The high-pressure valve should be moved ahead to clear exhaust-port, and the piston pushed in the forward end of cylinder and blocked. The live steam would pass through the exhaust-port on the high-pressure side into the receiver, from there into the low-pressure steam-chest. The low-pressure cylinder would then be acting as a high-pressure engine. Care must be taken not to open the throttle-valve suddenly, on account of the large area of low-pressure cylinder.

When the low-pressure main-rod is broken or disconnected, what should be done?

The piston-head must be blocked in the back end of the cylinder, and the low-pressure valve moved back to clear the exhaust-port on that side, the valve cover-

ing the back-port when a head is not broken out. Opening the exhaust-port on the low-pressure side provides an outlet for the exhaust-steam from high-pressure engine.

Why must the high-pressure valve be pushed ahead?

In order to clear the receiving-port, or the port by which the live steam enters the high-pressure steam-chest, this port being in the back end of the steam-chest.

When a valve-rod breaks on either side, what should be done?

Do the same as for a broken main-rod on that side; also, take down the main-rod and block cross-head.

If the back-head of intercepting-valve steam-cylinder broke out, could the engine be run as a compound engine?

The engine would be as a compound engine, from the fact that the intercepting-valve would not be moved to the position as when starting as a non-compound because of the steam in the intercepting-valve cylinder not being able to move the valve to the proper position on account of the head being broken out; also, the exhaust from the high-pressure cylinder into receiver would hold the intercepting-valve in the compounding position.

Would steam escape from the steam-cylinder of intercepting-valve in this case when in the compounding position?

Steam would not escape when in this position. The engineer should see that the lever in cab is in the proper position for compounding. When the lever is put in the position for starting, then steam would es-

cape from the back end of steam-cylinder of intercepting-valve with the head broken out.

Has this ever happened?

It has.

How would it be possible to use live steam in both cylinders when starting with the intercepting-valve disabled in the manner spoken of?

Live steam could be used in both cylinders to start with by lifting the poppet-valve and blocking it from the seat. This would let live steam into the low-pressure steam-chest.

When should this be done?

Before the throttle is opened.

Would it be possible to run with low-pressure cylinder having the high-pressure valve covering all the ports on H. P. side?

The engine can be run in this manner. With the intercepting poppet-valves steam will pass through the poppet-valve into the low-pressure steam-chest. The engineer must put the lever in cab in the position for starting. This will admit steam into back end of intercepting-valve steam-cylinder, closing the receiver and holding poppet-valve open. As there is no steam in the receiver, the intercepting-valve will not open and close the poppet-valve.

Is there any other way in which the poppet-valve could be held open to admit live steam into the low-pressure steam-chest?

The poppet-valve could be held open by taking the back head off the intercepting-valve steam-cylinder and pushing the piston-head in forward end of cylinder and putting a block in, and putting on the head.

This would prevent the steam in receiver from closing the poppet-valve. The same can be done with the small piston moving the valve admitting steam to the intercepting-valve steam-cylinder. This will also prevent the movement of the intercepting-valve mechanism and closing the poppet-valve.

What form of breakdown would cause the high-pressure valve to be put in the position to cover all the ports on that side?

When both cylinder-heads are broken out or a front head broken out, and a piece broken out of the bridge between exhaust-port and front steam-port; also, it is policy when running with low-pressure cylinder alone, and do not want any steam to get into the high-pressure cylinder, to cover all the ports on the high-pressure side.

How can the engine be used as a high-pressure engine for some distance when starting?

By shifting the lever in and out of compound position repeatedly. Remember that there is no steam in the intercepting-valve when the throttle is closed and the dry-pipe empty. Disconnect as for a simple engine for other breaks.

COMPOUND PASSENGER LOCOMOTIVE, NEW YORK, NEW HAVEN & HARTFORD R. R.*

The line and photo engravings on the opposite page show the general appearance and some details of construction of a new eight-wheeled compound locomo-

* Nat. Car and Loco. Builder.

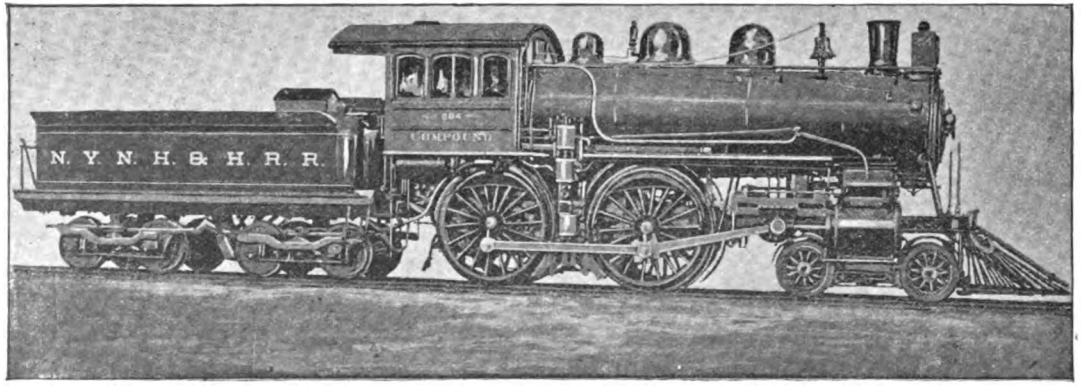

FIG. 87.—COMPOUND PASSENGER LOCOMOTIVE.

Cylinders, 21″×31″×26″.
Driving-wheels, 78″ Diameter.
Truck-wheels, 33″ Diameter.
Total Wheel-base, 22′ 9″.

Total Weight Working Order, 125,000 Pounds.
Total Weight on Drivers, 84,000 pounds.

Boiler, 60″ Diameter.
Flues, 250.
Fire-box, 120×41½.
Steam-pressure, 200 pounds.

tive built for the New York, New Haven & Hartford Railroad, according to designs furnished by Mr. John Henney, Jr., Superintendent of Motive Power, by the Rhode Island Locomotive Works.

The intercepting-valve is the Rhode Island Locomotive Works patent.

Figs. 88 and 89 illustrate the construction and show the operation of the intercepting-valve. Fig. 88 shows a front section of the intercepting-valve at ports *d* and *e*; also a view of a portion of receiver with the exhaust-valve. Fig. 89 shows a side section of intercepting-valve while running compound, and Fig. 90 shows same while running simple. *A* (in Figs. 87, 88, and 89) is the intercepting-valve casing. *B* is the reducing-valve. *C* (in Fig. 89) is the oil dashpot. *D* (in Figs. 87 and 88) is a pipe from main steam-pipe to intercepting-valve. *E* is the receiver, and *F* is the exhaust-valve; *a*, *b*, and *c* (in Figs. 89 and 90) show the intercepting-valve pistons; *d*, port from *D*, through *A*; *e*, port from *A* into the reducing-valve *B*; *f* (in Figs. 89 and 90), port from *A* into passage to low-pressure steam-chest; *m*, exhaust-valve lever; and *o*, ports through exhaust-valve and seat.

This device operates as follows, the intercepting-valve being in any position (as in Fig. 89), and the exhaust valve closed (as in Fig. 89) and the throttle open:

Boiler-steam will pass to the high-pressure cylinder, in the usual manner, and also through pipe *D* into the intercepting-valve *A*, causing the piston to move into the position shown in Fig. 90. In this position the receiver is closed to the low-pressure cylinder by the piston *C*, and steam from *D* passes through ports *d* and

e and reducing-valve *B* into the low-pressure steam-chest, the pressure being reduced from boiler-pressure, in the ratio of the cylinder areas. The piston *a*, *b*, *c* is so proportioned that it will automatically change to the compound position shown in Fig. 89, when a predetermined pressure in the receiver *E* has been reached by exhausts from the high-pressure cylinder. The engine thus starts with steam in both cylinders, and automatically changes to compound at a desired receiver-pressure.

The engine may be changed from the compound system to the simple at any time, at the will of the engineer, by opening the valve *F* connecting the receiver to the exhaust-pipe, allowing the exhausts from the high-pressure cylinder to escape through the nozzle in the usual manner.

The exhaust-valve *F* is operated as follows: The lever *m*, which rotates the exhaust-valve *F*, is connected by a rod to a handle in cab. To run compound, place lever *m*, as shown in Fig. 89, which closes port *o*. To run simple, place lever *m*, as shown in Fig. 90, the ports *o* opening *E* to exhaust.

It is obvious that, in case of bad conditions of starting, the engine may be operated as a simple one at the will of the engineer by opening the exhaust-valve before starting, and that upon its closure the piston *a*, *b* *c* will automatically take the compound position shown in Fig. 89.

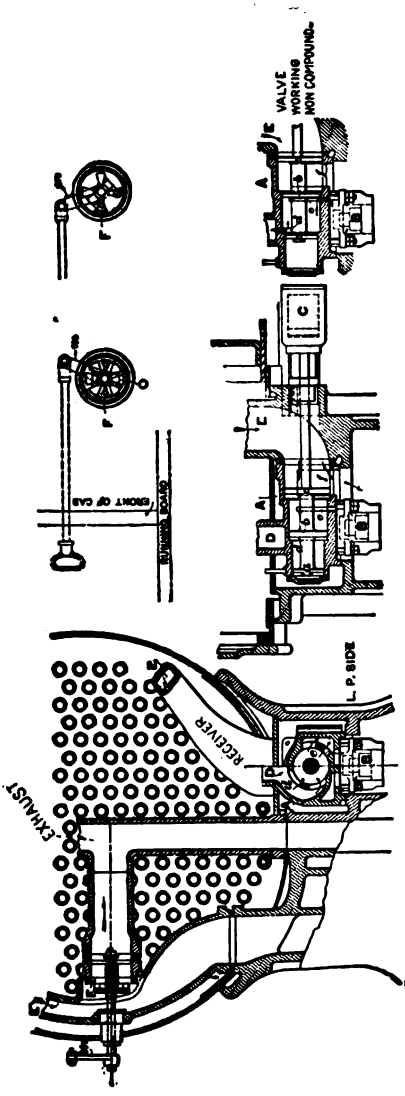

FIG. 88. COMPOUND FIG. 89. FIG. 90.

INTERCEPTING-VALVE FOR COMPOUND ENGINES.

ACCIDENTS WITH THE RHODE ISLAND COMPOUND AND INTERCEPTING-VALVE.

When a valve-rod of the low-pressure engine is broken or disconnected, how should the engine be prepared to be brought in?

The valve on low-pressure side should be put in the centre of the seat covering the ports on that side, then open the exhaust-valve in receiver to exhaust-nozzle; run with the high-pressure engine disconnected main as for simple engine on low-pressure side.

Why does not the live steam from the reducing-valve escape into the receiver and from there into the atmosphere?

On account of the receiver having no pressure in it, the intercepting-valve remains closed to the receiver, holding the live steam in the low-pressure steam-chest.

When a main-rod is broken or disconnected on the low-pressure side, what must be done?

Do the same as for a broken valve-rod.

When a valve-rod is broken or a main-rod must be taken down on the high-pressure side, what should be done in this case to bring the engine in?

The steam-valve on high-pressure side should be put in the centre of the seat covering the ports, and run with low-pressure side.

How does the live steam get into the low-pressure steam-chest?

Through the reducing and intercepting valve, the latter valve confining the steam within the low-pressure steam-chest.

If the piston-head of intercepting-valve that closes the receiver to low-pressure steam-chest should be broken or cracked, how could the engine be run without using in the low-pressure cylinder live steam, or having an excessive back-pressure on high-pressure piston-head?

By taking off the back-head of the intercepting-valve oil-cylinder, and putting a block in, pushing the intercepting-valve to the position for compounding, putting on the cylinder-head, and screwing tight against the block.

Why cannot the exhaust-valve in receiver be opened and the engine run as a high-pressure engine?

On account of the hole in intercepting-valve letting the live steam escape into the atmosphere from the low-pressure steam-chest.

What would be the effect if the middle piston-head of intercepting-valve was cracked or broken out?

The live steam would move intercepting-valve to the non-compound position, closing the receiver, and admitting live steam to the low-pressure cylinder. This would form a heavy back-pressure against the high-pressure piston-head.

What should be done then to overcome this back-pressure?

Open the exhaust-valve in receiver and run as a high-pressure engine. The intercepting-valve must be closed in this case, or live steam will pass out into the exhaust-pipe through the receiver.

How should the engine be run with a broken or cracked receiver?

By opening the exhaust in receiver and running as a high-pressure engine.

Disconnect for other breaks as for a simple engine.

A COMPOUND PASSENGER LOCOMOTIVE.

The accompanying illustration is from a photograph of an 8-wheel compound engine recently built by the Pittsburgh Locomotive Works. It is of the two-cylinder type, and has the starting-valve patented by Mr. Henry F. Colvin of Philadelphia. With this the engine can be worked as a compound, or steam can be admitted directly into the low-pressure cylinder at the will of the engineer. In the latter case the valve admitting steam from the boiler acts as a reducing-valve, in order to equalize the force exerted in the two cylinders.

Figs. 92 and 93 show the general construction of the starting gear and intercepting-valve of the Pittsburgh compound locomotives. This gear is generally placed on the cylinder saddle, and is so arranged that the engineer, by moving the lever in the cab, can open an independent exhaust for the high-pressure cylinder through the passage, Fig. 93, to the stack. When it is desired to run compound the lever is again moved and the intercepting-valve is open. In Fig. 92 the intercepting and reducing valves are shown when in the position to work compound.

In this system steam from the steam-pipe in the high-pressure cylinder saddle passes to the reducing-valve through a small passage shown in Figs. 92 and 93. When the reducing-valve is permitted to open, as it is

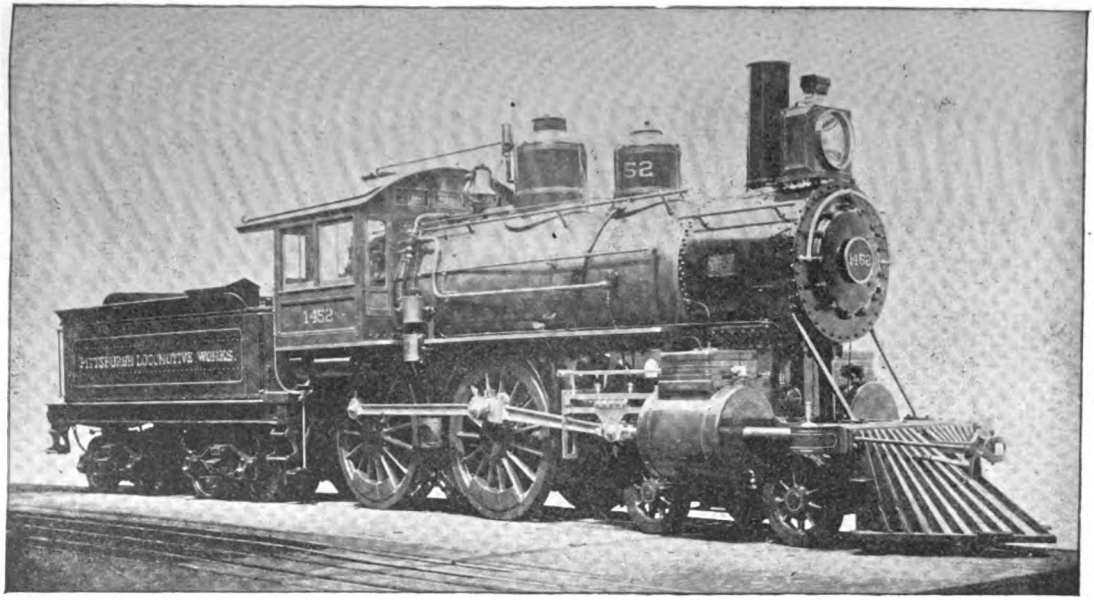

FIG. 91.—EIGHT-WHEEL COMPOUND PASSENGER ENGINE, BUILT BY THE PITTSBURGH LOCOMOTIVE WORKS.

Gauge of Road, 4 feet 8½ inches.
Cylinders, 19 and 29×26 inches.
Total Wheel-base, 22 feet 6 inches.
Driving-wheel Base, 8 feet.
Diameter of Driving-wheels, 72 inches.
Total Weight, 112,550 pounds.
Weight on Driving-wheels, 72,000 pounds.

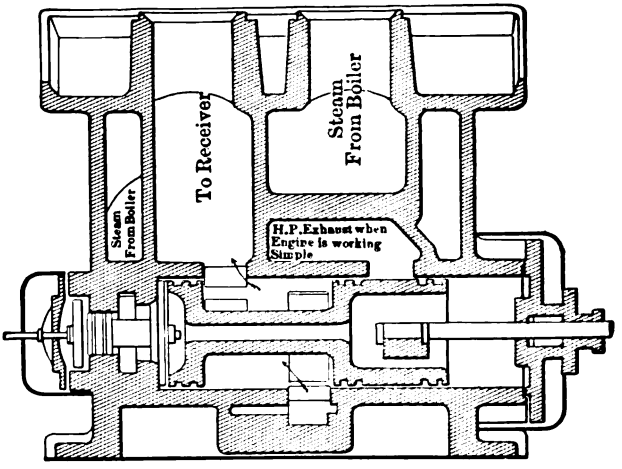
To Receiver
Steam From Boiler
Steam From Boiler
H.P.Exhaust when Engine is working Simple

FIG. 92.

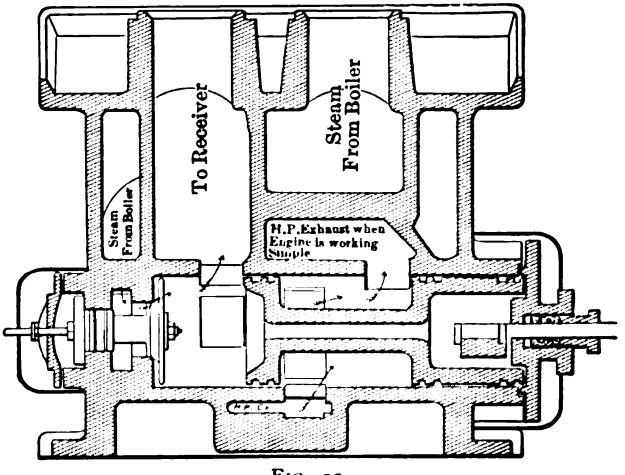
To Receiver
Steam From Boiler
Steam From Boiler
H.P.Exhaust when Engine is working Simple

FIG. 93.

in Fig. 93 by the removal of the intercepting-valve to the right, steam passes directly through the reducing-valve, as shown by the arrows from the high-pressure steam-pipe to the receiver, thence to the low-pressure cylinder. The amount of reduction of pressure by the reducing-valve depends upon the ratio of the areas of the piston of the reducing-valve and the area of the valve itself.

When the engine is to be run compound the engineer forces the intercepting-valve back to the position shown in Fig. 92 by means of the rod which is connected to a lever in the cab. The movement of the intercepting-valve to the left forces the reducing-valve to its seat, as shown in Fig. 92, and permits the high-pressure cylinder to exhaust into the receiver. When in the non-compound position, shown in Fig. 93, the high-pressure cylinder exhausts directly to the atmosphere, as indicated.

ACCIDENTS TO PITTSBURGH COMPOUND LOCOMOTIVE AND INTERCEPTING VALVE.

When a main-rod is broken or disconnected on the low-pressure side, what should be done to run engine to end of trip?

The low-pressure steam-valve must be put in centre of seat covering the ports on that side, the intercepting-valve pulled back-opening the exhaust from high-pressure cylinder to the stack; run in with high-pressure side.

When a valve-rod is broken or taken down on low-pressure side, what should be done in this case?

Do same as for a broken main-rod, also blocking cross-head and taking down main-rod, and run in with high-pressure side.

When the intercepting-valve is pulled back, opening the high-pressure to stack, does live steam get into the low-pressure steam-chest?

Steam passes through the reducing-valve into receiver and low-pressure steam-chest.

When a main-valve stem or rod is broken or taken down on the high pressure side, what should be done in order to bring the engine in?

The steam-valve on that side should be put in centre of seat covering the ports, the intercepting-valve pulled back, which opens the reducing-valve, admitting live steam into receiver and low-pressure steam-chest, do the same for a broken main-rod, and run in with low-pressure side.

If the reducing-valve was broken or a piece broken out, would it interfere with the working of the engine?

No. The engine can be run as a high-pressure engine, putting the intercepting-valve in the position as a non-compound, but the engine can be run as a compound by putting the intercepting-valve in the compounding position. The end or head of intercepting-valve has rings sprung in it; this will prevent the live steam from getting into receiver or low-pressure steam-chest.

If the front head of intercepting-valve was broken or cracked, what would be the effect on the engine when starting?

If the intercepting-valve was put in the non-compound position, as when starting or running as a high-

pressure engine, the live steam escapes into the atmosphere, causing the engine to be weak on that side.

Can the engine be used as a high-pressure engine to start with in this condition?

If the break or crack is large enough, the intercepting-valve can be pushed ahead until the back-head covers the exhaust-port to stack. This will permit the live steam from reducing-valve to pass over into low-pressure steam-chest through the receiver. The intercepting-valve after a couple of revolutions of driver can be put in the compounding position closing the reducing-valve, and the engine run as a compound.

When a piece is broken out of front end of back-head of intercepting-valve, can the engine be run with both sides?

The engine can be run by putting intercepting-valve in the compound position, although the power of low-pressure cylinder would be reduced in proportion to the amount of steam escaping into stack through broken head.

How can the engine be run as a high-pressure engine when a piece is broken out of back-head of intercepting-valve?

By putting the valve in the non-compound position, and, driving a plug in the port leading from end of valve to the other. (The purpose of the port is to equalize the pressure on valve, so that it can be moved by hand.)

If the receiver was broken or cracked very badly, what should be done in this case?

The reducing-valve bound to its seat, the intercepting-valve put in the non-compound position, the low-

pressure side disconnected as for a broken main-rod, run with the high-pressure side.

How can the reducing-valve be held to the seat when the intercepting-valve is away from it?

By taking off the collar on the end of reducing-valve and putting thick washers on; then put collar on and screw up tight-binding reducing-valve to seat.

What effect has a receiver which is very badly cracked or broken on the engine?

It destroys the draught, preventing the engine from steaming, and is liable to cause a back draught and burn the fireman.

This applies to any engine using a receiver in front end.

Disconnect as for a simple engine for other breaks.

THE BROOKS TWO-CYLINDER COMPOUND LOCOMOTIVE,

built by the Brooks Locomotive Works, under patents issued to Mr. John Player, Mechanical Engineer of the Brooks Locomotive Works. The notable features of Mr. Player's patents are shown in the accompanying illustrations.

Referring to Fig. 94, it will be seen that a novel form of receiver has been adopted, and that the combined intercepting and reducing valve is placed in the smoke-box on the right-hand side of the engine. The course of the steam is so clearly indicated in Fig. 94 that further description of the general arrangement of the engine is unnecessary. The intercepting and reducing valve is shown in greater detail and in two positions in Figs. 97 and 98. The position shown in

Fig. 97 is that which the valve occupies when the engine is working as a compound. Suppose that the

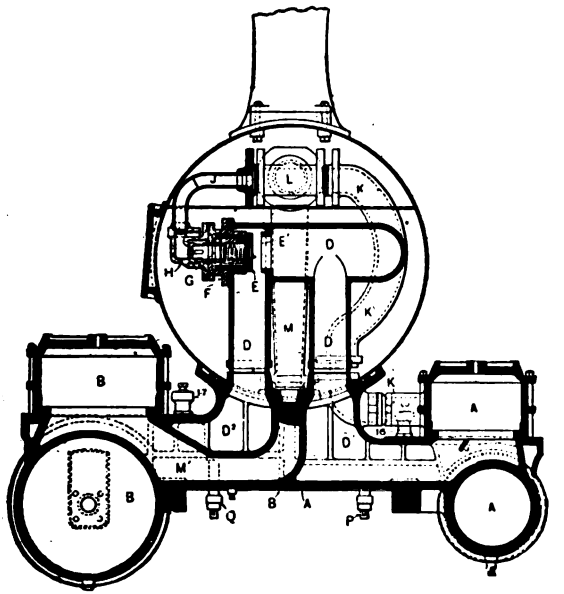

FIG. 94.—THE BROOKS TWO CYLINDER COMPOUND LOCOMOTIVE. (Cross-section.)

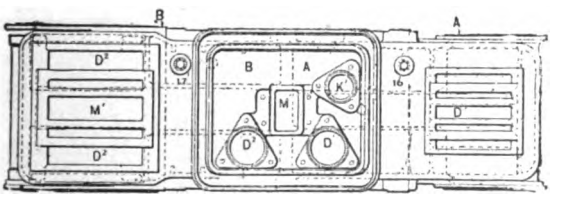

FIG. 95.—THE BROOKS TWO-CYLINDER COMPOUND LOCOMOTIVE. (Plan.)

throttle is opened when the valve is in this position:

live steam enters by the pipe *J*, and pressing on the end of the reducing-valve *G*, opens it, and passes thence

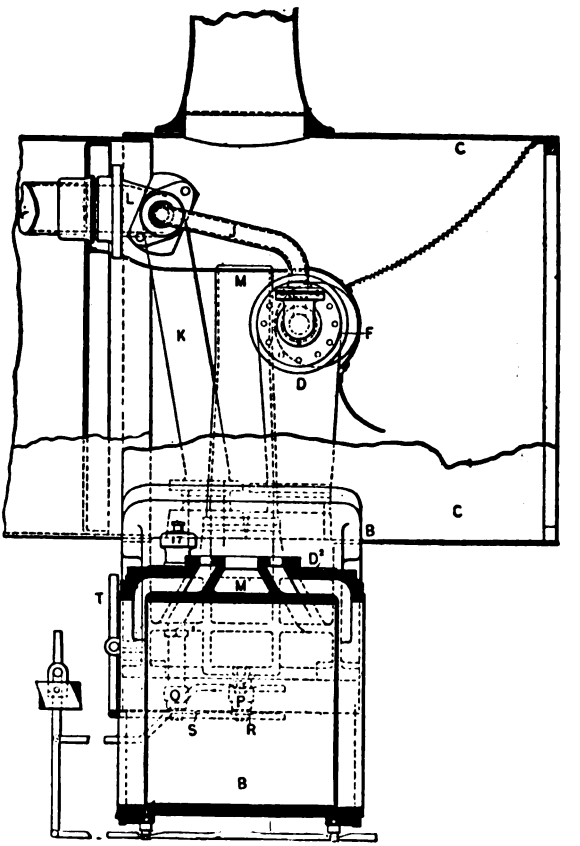

FIG. 96.—THE BROOKS TWO-CYLINDER COMPOUND LOCOMOTIVE.
(Longitudinal Section through Low-pressure Cylinder.)

through the opening (6) and the cored space in the reducing-valve, and acts upon the back of the inter-

cepting-valve E, closing it against its seat E'. The valve would then occupy the position shown in Fig. 98. When in this position steam flows through the openings (3) into the low-pressure end of the receiver, and thence to the low-pressure steam-chest and cylinder. The pressure of the steam thus admitted to the low-pressure steam-chest is regulated by the relative areas

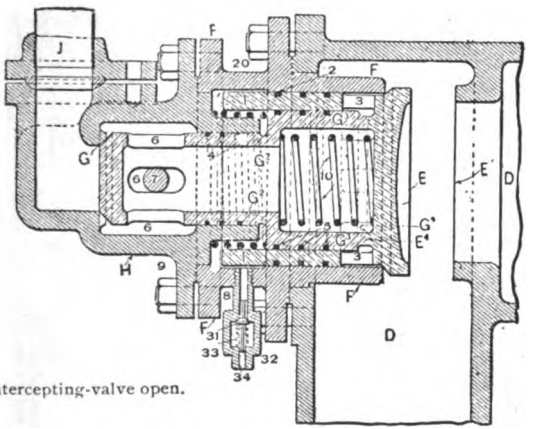

FIG. 97.—THE BROOKS TWO-CYLINDER COMPOUND LOCOMOTIVE.

of the two ends of the reducing-valve. Under these circumstances steam from the high-pressure cylinder is exhausted into the closed receiver until the back-pressure in the receiver is approximately equal to that of the steam being admitted directly to the low-pressure side. When the pressure on the high-pressure side reaches this point approximately, the intercepting valve E is forced open, and by its first movement closes the outlet of the reducing-valve at G_4, thus

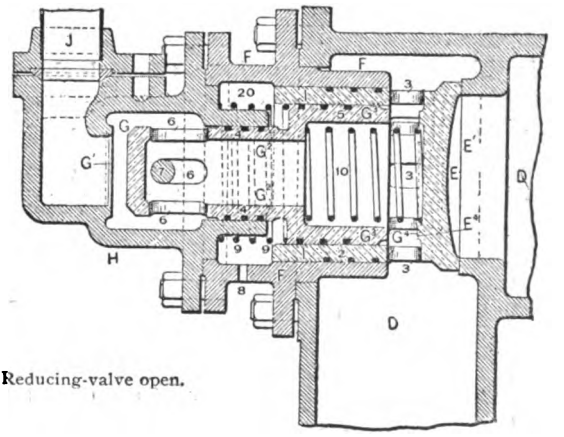

FIG. 98.—THE BROOKS TWO-CYLINDER COMPOUND LOCOMOTIVE INTERCEPTING-VALVE.

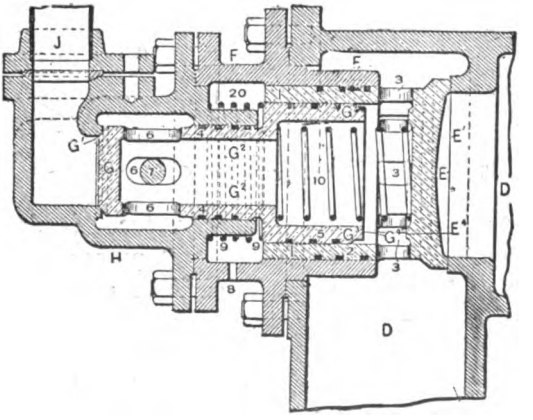

FIG. 99.—THE BROOKS TWO-CYLINDER COMPOUND LOCOMOTIVE INTERCEPTING-VALVE.

closing off the direct supply of steam to the low-pressure side. The difference in area between the large end of the intercepting-valve and the small end of the reducing-valve is then sufficient to enable the receiver-pressure to remove both valves further to the left, as shown in the illustrations, and to close the reducing-valve, thus shutting off the direct supply of boiler steam to the low-pressure cylinder. It will be seen that this valve is, as has been mentioned, a combined reducing and intercepting valve. Mr. Player has patented several other forms of this valve, one of them provided with springs for regulating the action in opening and closing, and also providing for placing the valve in the cylinder saddle. Fig. 99 shows the position of valves with throttle closed and receiver empty.

Another feature of this system of compound locomotives is the arrangement of regulating valves, which is shown by Fig. 96, and at *P* and *Q* in Fig. 94. The object of these valves, which, it will be seen, are operated similarly to the ordinary cylinder-cocks, is, in the first place, to provide an outlet for the exhaust-steam from the high-pressure cylinder when it is desired to move the engine a short distance, as in switching, etc., and, secondly, to provide a means of freeing the receiver and steam, and so taking all pressure off the low-pressure piston, when it is desired to stop the engine within a short distance, as in coupling to trains, etc.

ACCIDENTS TO THE BROOKS COMPOUND ENGINE AND INTERCEPTING-VALVE.

When a main-rod is broken or disconnected on the high-pressure side, how can the engine be run to end of trip?

By running with the low-pressure side.

What should be done in the way of disconnecting in this case?

Cover the ports on the high-pressure side with the valve (and using live steam in the low-pressure cylinder to run with).

How does the steam get into the low-pressure steam-chest?

Through the reducing-valve and intercepting-valve.

Why does not the steam get into the high-pressure steam-chest and receiver?

On account of the live steam in intercepting-valve holding that valve to the seat closing the receiver.

For a broken valve-rod or when disconnected do the same as for a main-rod taken down on that side (disconnecting main-rod).

When a main-rod or valve-rod is broken or disconnected on the low-pressure side, what should be done to run the engine?

The low-pressure valve must be moved back to clear exhaust-port on that side, the piston-head blocked securely in the back end of cylinder.

How can the intercepting-valve be kept open in this case. There must be pressure enough in the receiver to keep the intercepting-valve open.

The way to have a pressure in receiver would be to have the exhaust-port opening very small on the low-pressure side.

Is there any other way of providing an outlet for the exhaust-steam from high-pressure cylinder?

There are regulating-valves tapped in the receiver-passages in cylinder-saddles, but these are not large enough to provide an outlet when pulling cars for any distance; also, the exhaust will be lost on the fire.

How can the intercepting-valve be made inoperative?

By putting a blind-washer in the steam-pipe that joins the reducing-valve chamber. This will prevent any steam from getting into the intercepting-valve to operate it.

When the low-pressure steam-valve is moved all the way back in steam-chest, will it open all the ports?

The valve is liable to drop off its seat in any engine whose seat is higher than the face of receiving-ports, and this will open all ports; but if this should happen, the pressure would be on each side of piston-head. When the intercepting valve is made inoperative, the low-pressure exhaust-port should be opened full.

When from any cause the intercepting-valve is broken so as to leave an opening into the receiver, how could the engine be run as a compound?

Put a blind-washer at joint where the small steam-pipe joins intercepting-valve; this will prevent live steam from getting into receiver.

Do the same for a broken reducing-valve.

When a receiver is broken or badly cracked, what should be done?

The proper way would be to disconnect the high-pressure side and run in with low-pressure side, using steam through the reducing-valve.

Disconnect for other broken parts as for a simple engine.

BROOKS TANDEM COMPOUND LOCOMOTIVE.

The Tandem Compound Locomotive is now in actual use in this country, and the system which is described contains the patents of J. Player, Mechanical Engineer of the Brooks Locomotive Works. The longitudinal section, Fig. 101, shows the cylinder valves and receiver, also piston-heads, ports, and method of packing between the two cylinders. The valves are of two types. The low-pressure valve is a slide-valve having the usual balance-plate, but in this case the plate is made as shown in Fig. 102, this being on account of the rod that is pivoted on top of the low-pressure valve-yoke. The high-pressure valve is a piston-valve, being hollow. The live steam is confined between the two heads of valve, packing-rings are sprung in heads to make it tight. As will be understood, this valve acts directly opposite to that of a common slide-valve in this way, that the lap of the valve is in the inside of heads, or what would be the exhaust side of slide-valve, and exhausts the steam from each end instead of into the centre of valve, as with the slide-valve.

The object of having the valve hollow is to allow the exhaust-steam to pass through valve into receiver. By referring to Fig. 101 it will be seen that the valves are in open communication with each other, the valve-cham-

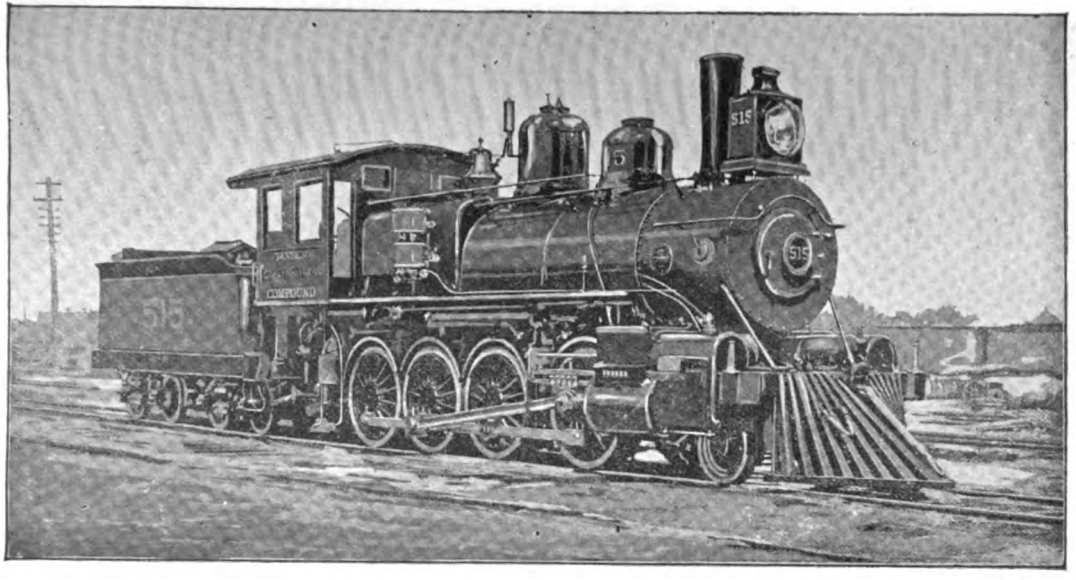

FIG. 100.—BROOKS TANDEM COMPOUND CONSOLIDATION FREIGHT LOCOMOTIVE.

bers acting as a receiver. In the receiver proper is a cross-shaft, on which rotates a rocker-arm ; to the upper arm is connected the rod, which is fastened to the low-pressure valve-yoke. To the lower arm is fastened the rod, which is attached to high-pressure valve. The usual yoke surrounds the low-pressure, valve having its

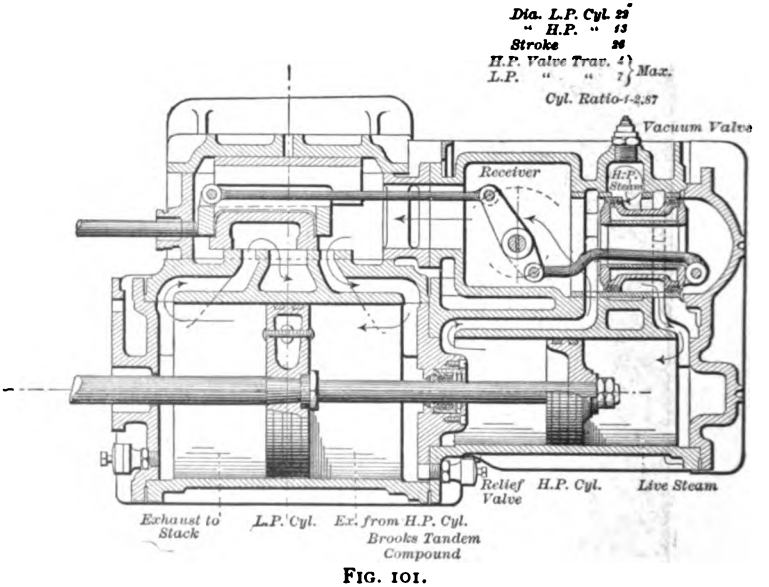

FIG. 101.

stem connected to the valve-rod. The purpose of having the rocker-arm is twofold : First, that by having the arms of different lengths there will be a difference in the travel of the valves, which is a very good point in compounding. When the low-pressure valve travelling 7 inches maximum, the high-pressure valve-travel is 4 inches maximum, so that when using a short cut-off

in the high-pressure cylinder you have a wide opening in the low-pressure ports. Second, the valves must travel in opposite directions on account of the high-pressure steam being confined between the heads of high-pressure valve, and by using the rocker-arm * this

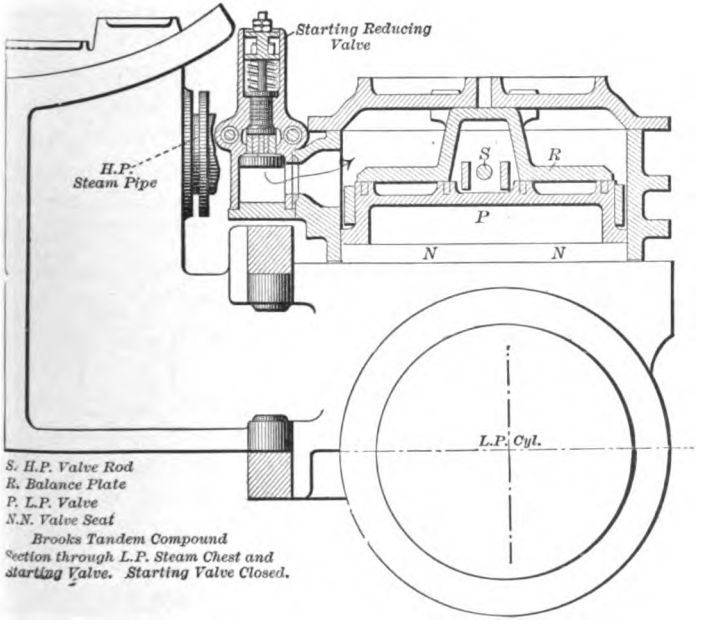

FIG. 102.

is accomplished. The action of valves would be as follows: When the low-pressure valve moves to left of Fig. 101 to uncover the front port of the low-pressure cylinder, the high-pressure valve would move to the

* Builders term *reversing-arm.*

right and uncover the front of steam-port, and at the same time open back-port of high-pressure cylinder to receiver.

The course of the steam would be as follows: when high-pressure valve opens, the steam enters cylinder, exerting its power against the high-pressure piston-

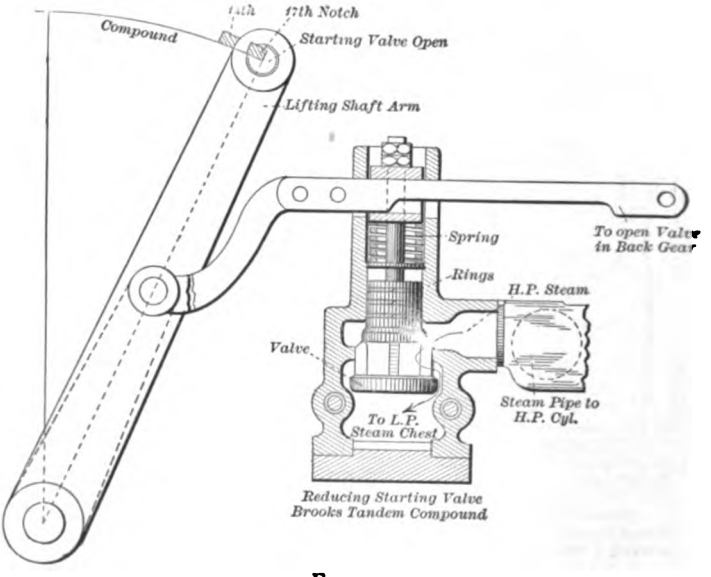

FIG. 103.

head. The steam that has expanded in the other end of high-pressure cylinder would pass out the back-port into the receiver, from there into the low-pressure steam-chest proper, and into the low-pressure cylinder through the front steam-port, which would be open. The steam in the other end of low-pressure cylinder would pass

out the back-port under the valve into the stack, as with the simple engine.

There is provided a starting-valve on this as on all compounds. This valve is attached to the side of low-pressure steam-chest, and steam-pipe that leads to the high-pressure steam-chest. This valve is simple in construction. Fig. 102 shows the construction and position of valve when closed. Fig 103 shows the position when open at the time of starting. The valve-casing is bolted to low-pressure steam-chest, and in the lower end of casing is a seat against which the valve, which is a wing-valve, closes. Attached to this valve is a stem which extends up to the top of casing; this valve has two seats, as will be seen: the upper seat is in contact with valve when it is closed; rings are sprung in the extension of valve to keep it from leaking when valve proper is open. To the upper end of the valve-stem is fastened a head having two horizontal openings through it. Between this head and a shoulder in the casing is placed a strong helical spring. The purpose of this spring is to close the valve. Passing through the openings in the head on the stem are two rods of different widths vertically, similar to a cylinder-cock rod. These rods are connected to the reversing-arm of lifting-shaft. The operation is as follows: When the reverse-lever is put all the way down on the quadrant, as when starting a train, the rods are pushed forward in the head on starting-valve stem, the wider part of rod enters the opening, and forces the head and spring down. The live steam then opens the valve and admits steam into the low-pressure steam-chest, at the same time reducing the steam-pressure due to the

difference in area of the two sides of the valve proper. When the reverse-lever is put back to the 14th notch, the wide part of rod is withdrawn from the head on valve-stem, the spring will close valve and compounding begins. This action takes place in forward or back gear.

ACCIDENTS TO THE BROOKS TANDEM COMPOUND.

When a main-rod is broken or taken down, what should be done in way of preparing the engine to be run in?

The valves on the side disconnected should be put in the centre of their seats covering all steam-ports, and run with the good side.

When a valve-rod breaks, do the same as for main-rod disconnected.

If a front-head of high pressure cylinder is broken out, what should be done?

The valves on that side put in centre of the seats covering the ports, main-rod taken down, cross-head blocked, and run in with the other side.

Could the engine be run without taking down the main-rod?

By taking off the front head of valve-chamber and disconnecting the high-pressure valve-rod, putting the valve in centre of seat covering the ports, putting a block in the centre of valve so as to carry the rod to clear valve, the reverse-lever put in full forward notch, this will open the starting-valve. Disconnect the rod from the reverse-arm: this will prevent the starting-valve from being closed when the reverse-lever is pulled up. The engine will be running as a compound on one side, and the low-pressure cylinder will act as high-

pressure engine on the broken side; this shows what can be done in an extreme case. Care must be taken to keep the high-pressure cylinder oiled; this may be done through the cylinder-cocks or open end of cylinder.

What could be done in case of a broken receiver?

If badly broken, a blind-washer could be put in joint where the steam-pipe joins the high-pressure steam-chest, disconnecting main-rod and blocking cross-head.

If the rocker or high-pressure valve reversing-arm should break off, what should be done?

Put valve in centre of seat covering all ports, take down main-rod, block cross-head, and run in with other side.

How could you cover all ports in this case?

Cover the low-pressure ports by the reverse-lever, then take off the front head of high-pressure valve-chamber, put that valve over ports, and put on head.

How can the high-pressure valve be held in position when disconnected from the rocker-arm?

By cutting a block which should have a section cut out of it the length of the valve, putting it through the valve, and letting it drop down over the ends of valve, the one end abutting against the rock-shaft in receiver, and the other end held by the head being screwed up against it.

In any break in which the valves can be made to cover the ports, the quickest way is to disconnect on that side and run with good side. As both sides of an engine are constructed alike, these questions apply to both.

In a case where the valves could not be made to cover all ports, a blind-washer put in steam-pipe joint will prevent steam from getting into valves or cylinders.

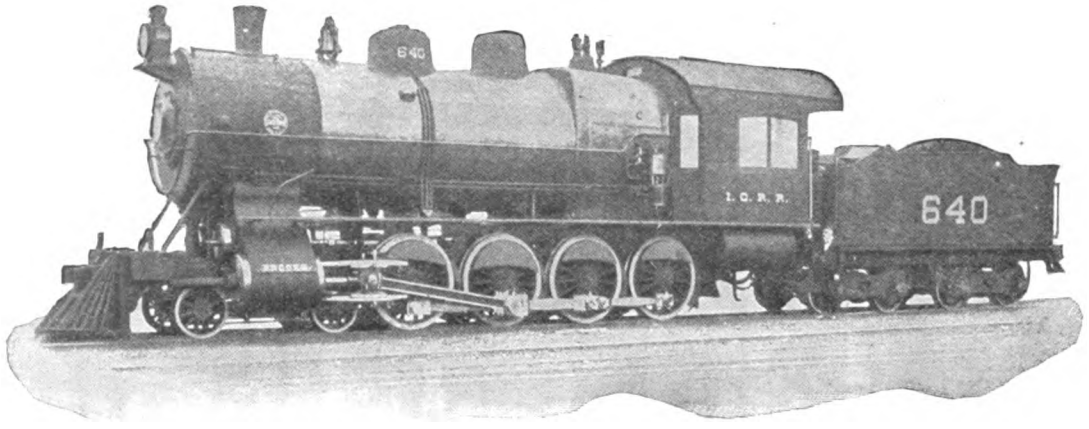

FIG. 104.—ONE OF THE HEAVIEST FREIGHT LOCOMOTIVES IN THE WORLD.

This locomotive is one of the heaviest ever built, and is designed to haul a train weighing 2045 tons, exclusive of engine, tender, and caboose, up a grade of 38 feet per mile, combined with 3-degree curves, at a speed of 15 miles per hour.

The boiler is of the Player-Belpaire type, and the thickness of the plates, $\frac{15}{16}$ inch and 1 inch, is thought to be the greatest ever used upon locomotive boilers. The diameter at front end is 82 inches, connection 88 inches, and throat 91$\frac{1}{4}$ inches.

Nearly all parts of this locomotive, usually made of cast iron, are, with the exception of the cylinders, made of cast or pressed steel or malleable iron. The Brooks piston-valve is used and the valve-chest in saddle is clearly shown.

BROOKS PISTON-VALVE LOCOMOTIVE.

Cylinders: Simple piston-valve, diameter 23 inches, stroke 30 inches.

Boiler: Improved Belpaire, diameter 82 inches.

Fire-box: Long, wide, length 132 inches, width 42 inches.

Wheels: Coupled drivers, No. 8, diameter 57 inches.

Leading Wheels: No. 4, diameter 30 inches.

Flues: No. 424, diameter 2 inches, length 14 feet $8\frac{3}{8}$ inches.

Boiler-pressure: Pounds per square inch above atmosphere, 210.

Average Weight: In working order—tender 132,700 pounds, drivers 193,200 pounds, leading wheels 39,000 pounds.

Total Engine Weight: 232,200 pounds.

Heating Surface: Flues 3237 square feet, fire-box 263 square feet, total 3500 square feet.

Grate Area: 37.5 square feet.

Wheel Base: Drivers 15 feet 9 inches, rigid 15 feet 9 inches, engine 26 feet 6 inches.

Engine and Tender: 55 feet $2\frac{3}{4}$ inches.

Fuel: Bituminous.

Hauling Capacity: 2045 tons, fifteen miles per hour, up a grade 38 feet per mile.

Illinois Central Railroad, owners.

BROOKS SINGLE-EXPANSION LOCOMOTIVE USING PISTON-VALVES.

There are a number of locomotives in operation using piston-valves instead of slide-valves. The purpose

of using these valves is as follows: The shortest possible passage between piston-head and valve is secured. The port can be of large area with a very small surface exposed to cooling effect. The large sectional area of port reduces the frictional resistance to a minimum; this reduces the loss in pressure of steam. The piston-valve being perfectly balanced reduces the wear and tear on the valve mechanism, and less power is absorbed to move them. It being possible to use a larger port, a longer lap on the valve can be used than with slide-valves, giving the same power at maximum cut-off as with a shorter lap with a slide-valve. This gives a free opening on the exhaust side, reducing the back-pressure in cylinder to as low a point as desirable. The shortest passage for the steam is secured from the top of saddle to the edge of valve. From the foregoing the following results must occur:

An increase of pressure on the admission-line or positive side of the diagram, due to large port-opening. A decrease of back-pressure on the negative side of diagram or exhaust-line. A decrease of power required to move valves.

Fig. 105 is a cross-section through the valve, valve-chest, and a portion of steam-cylinder of a Brooks engine using piston-valves. The valve-chest is cast integral with the steam-cylinder, and between the steam-cylinder and the upper portion of saddle. The steam-passage between edge of valve and the end of passage to which the steam-pipes are bolted in front is of the shortest possible length. This portion is jacketed over, preventing condensation. The valve is hollow, with a depression between the ends; in the two

heads are placed the packing-rings, made of cast iron. There are two rings at each end, as shown in Fig. 106, which is a detail drawing; these rings are turned with a flange at the side on the inner diameter; these flanges fit in a groove in a bull-ring, one ring on each side of bull-ring. The bull-ring and packing-rings are slipped

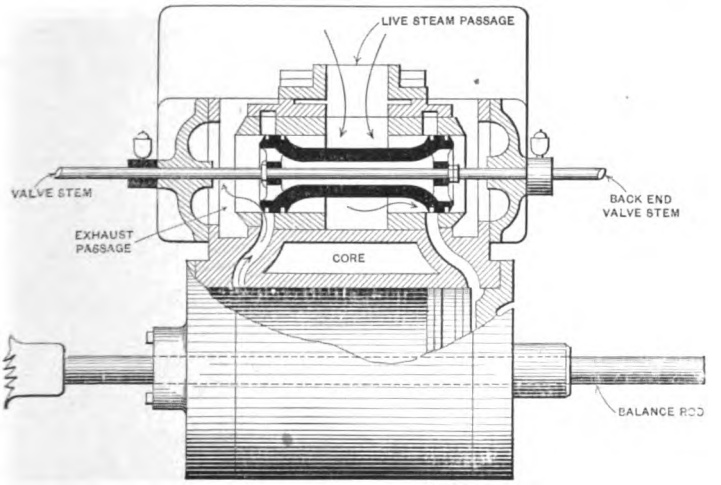

FIG. 105.—SECTION THROUGH VALVE-PORTS AND VALVE-CHEST.

over a follower, which extends the width of bull-ring. To this follower are spiders through which the valve-rod passes. In order to bind the rings and follower to main portion of valve, the nuts on back end of valve-rod are drawn up tight, thus drawing the rings and follower to the main body rigidly. It is understood in fitting these rings the packing-rings are fit so as to be able to expand as they wear, and are compressed when slipped in bushing. The bushing is in two pieces in

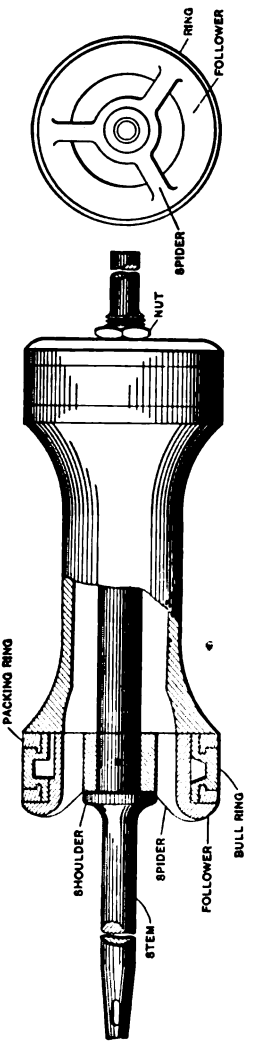

FIG. 106.—BROOKS PISTON-VALVE.

the valve-chest, with the live-steam ports in each end This valve is what is termed an internal-admission

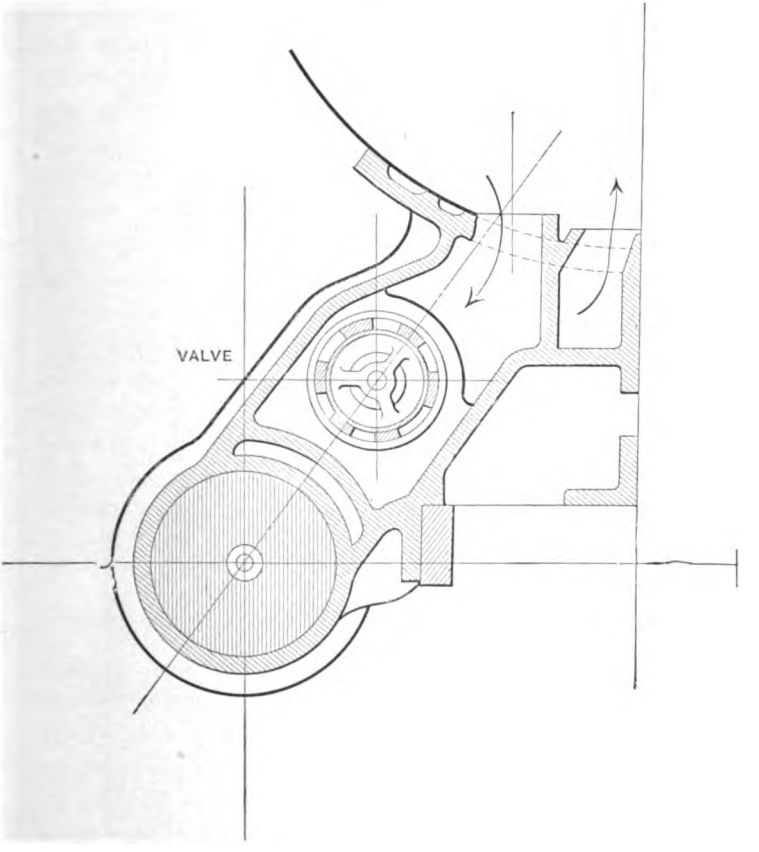

FIG 107.—SECTION THROUGH SADDLE-VALVE AND CYLINDER, BROOKS LOCOMOTIVE.

valve, as shown by the arrows in Fig. 105; the live steam surrounds the valve between the heads, while the exhaust takes place at each end of valve. An

exhaust-port and passage is provided at each end of valve-chest, as shown. The valve is taking steam in the front port at the inner edge of valve. The exhaust steam is escaping from the cylinder by back port at the outer edge of valve into exhaust-port and passage to stack clearly shown by arrows. With this valve the movement is opposite to that of a slide-valve taking steam at the outer edge; to open the same port, the valve moves in a direction opposite to that of the piston-head, due to internal admission. When opening the port, the eccentrics for this valve would be crossed when on forward centre where using a rocker-arm (indirect motion); with a direct motion they would be open on forward centre. This construction allows for a reduction of weights in the valves, cylinders, and connections. Fig. 107 is a cross-section through the cylinder, saddle, valve-chest, ports, and steam-passage. These engines are working under a pressure of 180 to 210 pounds of steam.

IMPROVEMENTS IN BROOKS TANDEM COMPOUND.

The particular improvement over the former compound engine described lies in the construction of steam-valves. In the engine shown in Fig. 108, which is a cross-section through cylinder and valves, piston-valves are used for both L.P. and H.P. cylinders; in the former engine described,* a slide-valve was used for L.P. cylinder, with valves moving in opposite directions. In Fig. 108 the H.P. and L.P. valves are connected to one valve-stem and both valves move in

* Page 149.

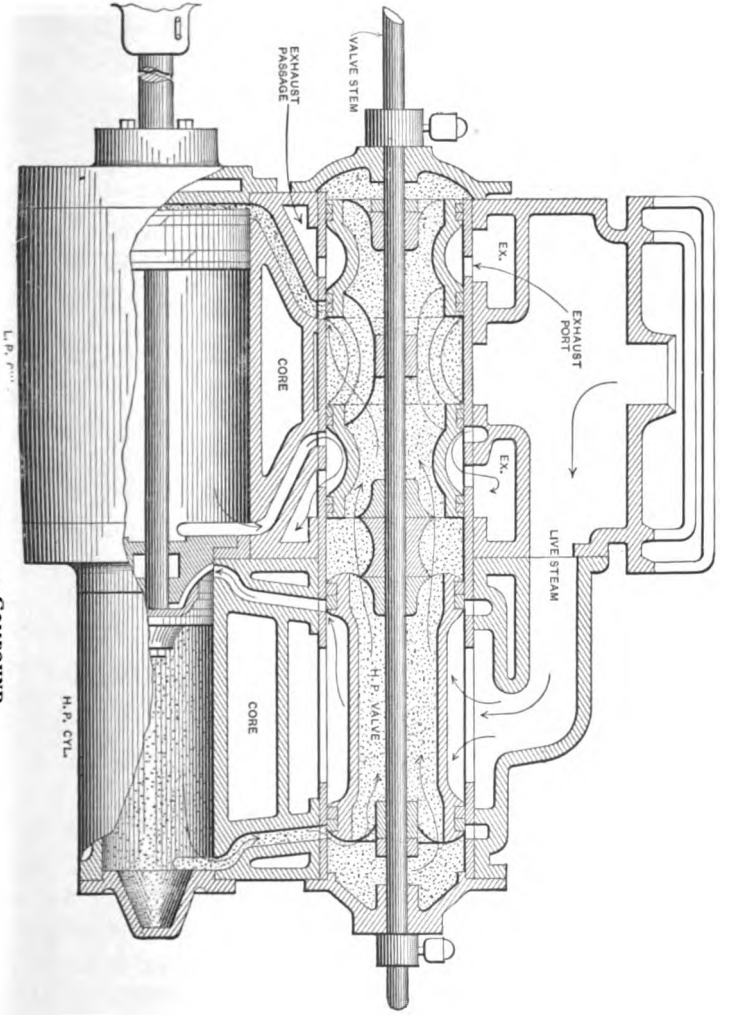

FIG. 108.—**BROOKS TANDEM COMPOUND.**

the same direction. The H.P. valve is a hollow piston-valve depressed in the middle, forming heads on the end, in which are placed the packing-rings. The L.P. valve is composed of two hollow piston-valves connected together by ribs in the centre. This valve has two depressions, with four sets of rings, the depressions forming passages around the valve for steam. The rings confine the steam between them. These valves slide in the valve-chest or cylinder, which extends the whole length of the two steam-cylinders, as shown; a bushing is pressed in this chamber, in which the valves slide. The various steam-ports are cored through the bushing, as shown. The live-steam passage is cored through the saddle to the rear, to where the H.P. cylinder is bolted on to the saddle; here the live-steam passage extends to the H.P. valve-chamber, as arrows, as shown in Fig. 108. The piston-heads are in the back end of cylinders and about to take steam in the back ports. The movement of piston-heads would be to the right, while that of the valves to the left for first half of stroke, as shown; the live steam passes around the H.P. valve in the depressed portion and is entering the back port, while the exhaust steam from front end of the H.P. cylinder is passing out of the front end and through the H.P. valve over to the L.P. valves, through them, and entering the back port of L.P. cylinder. The final exhaust steam from L.P. cylinder is passing out of front port of L.P. cylinder and around the right-hand portion of L.P. valve and exhaust passage to stack in this case. The exhaust passage is cored to each side of the steam-ports and then unites in a single

passage, thus making two exhaust ports. [The slide-valve requires the exhaust port to be in the centre and between the steam-ports.] The same action takes place for each end of cylinder. The hollow valves and valve-chamber act as a receiver for the exhaust steam from H.P. cylinder, and the outside of H.P. valve is always surrounded by live steam while running. In order to show the course of exhaust steam from the

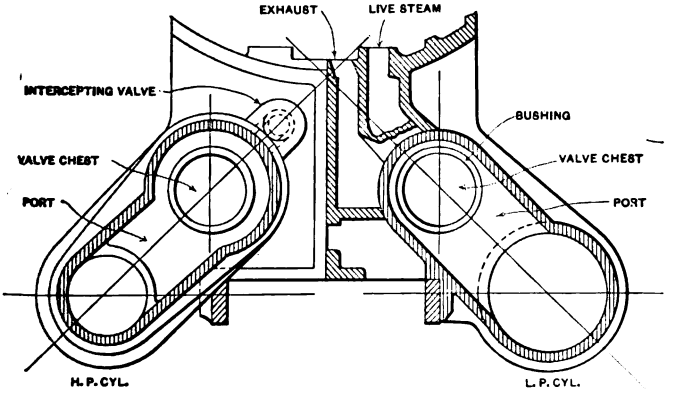

FIG. 109.—SECTION THROUGH CYLINDERS AND VALVE-CHESTS EXHAUST AND STEAM PASSAGES, BROOKS TANDEM COMPOUND.

H.P. cylinder, the whole area is dotted in to represent steam between the H.P. piston-head and L.P. piston-head. The arrows also show clearly the course taken. The arrows in L.P. port show clearly the passage of exhaust from cylinder to exhaust-port and passage. In this engine the intercepting-valve is placed in the saddle and not in the smoke-arch, as in former engine described, using two cylinders. For description see page 140. Fig. 109 is a cross-section through cylinders

valve-chests, and saddle of tandem compound, showing position of intercepting-valve.

QUESTIONS AND ANSWERS RELATIVE TO BROOKS TANDEM COMPOUND.

In what position are the cylinders of a Brooks tandem compound ?

As a rule the H.P. cylinder is placed ahead of the L.P. cylinder, and sometimes the L.P. is placed ahead of the H.P. cylinder.

Why is the L.P. cylinder placed ahead of the H.P. cylinder at times ?

In some types of engines having four-wheeled trucks it is preferable to place the H.P. cylinder back of the L.P. cylinder, thus materially reducing the weights and rendering the parts more accessible.

How are the piston-heads attached to piston-rod ?

The H.P. and L.P. piston-heads are attached to one rod. The H.P. rod is smaller in diameter when that head is placed ahead of the L.P. piston-head.

How is the steam prevented from passing into L.P. cylinder from H.P. cylinder around piston-rod ?

The intermediate head contains a metallic packing.

How many main steam-valves to a side in a Brooks tandem compound ?

There are two piston-valves in some and a piston- and a slide-valve in others.

What is the form of these valves when using the piston type ?

They are what is called the internal-admission type. By this term is meant the steam is admitted to the

cylinders from between the heads of piston-valves at the inner edge instead of the outer edge, with the exhaust passing through the valve.

How is the piston-valve kept tight?

By using cast-iron packing-rings, which are fitted into grooves in the piston-valve heads. These rings are turned of a larger diameter than the bore of valve-chamber in order to give them the necessary spring.

How is the L.P. valve constructed?

The valve is composed of two portions joined in the centre by ribs. There are four heads with a depression between each pair, using four sets of rings. The depression makes the exhaust passage around the valve.

How many ports are there in the valve-chamber?

There are six ports: two H.P. steam-ports, two L.P. steam-ports, and two exhaust ports from L.P. cylinder.

How does the steam get from the H.P. to the L.P. cylinder?

The steam is exhausted from the H.P. cylinder through the H.P. valve into the L.P. valve and ports into the L.P. cylinder.

How does the exhaust steam from L.P. cylinder pass to the atmosphere?

It passes out the steam-port and around L.P. valve into the two exhaust-ports into stack *via* exhaust-passage and nozzles.

How are the rings in valves carried over the ports?

By ribs or bridges cast across the ports, which prevent the rings from dropping into ports.

Why does it require less power to move a piston-valve then a slide-valve?

Because a piston-valve being a cylinder it is surrounded by steam, the pressure being equal on all sides.

What prevents live steam from passing over to L.P. cylinder from the live-steam passage and H.P. valve?

The rings in H.P. valve.

If the rings of L.P. valve were broken what would happen?

Some of the exhaust steam from H.P. cylinder would escape directly into the stack, causing a loss of power in L.P. cylinder.

How would such a condition be noted?

There would be a continuous blow from that side of engine.

If the rings on H.P. valve leak from any cause, what effect would it have on that side of engine?

It would cause the L.P. cylinder to operate with H.P. steam, and to work non-compound by balancing the H.P. piston-head. This would cause that side of engine to be much stronger than the other side and the exhaust would be much louder.

Can the usual indirect valve-motion be applied to this engine?

Yes, but the eccentric-rods must be crossed when the engine is standing on forward centre.

How are the piston-heads taken out of the cylinders?

The piston-heads are pushed to front end of cylinders, H.P. piston-head taken off; then the L.P. piston-head is pushed to back head of L.P. cylinder, head taken off, and piston-head taken out; this necessitates the taking down of the guides. Another way would be to disconnect the H.P. cylinder from L.P. cylinder where joined and take out piston-heads.

If from any cause the packing should blow out in intermediate head, what would be the effect?

The live steam from back end of H.P. cylinder would blow out to stack through L.P. cylinder and exhaust-ports at each stroke.

If the H.P. piston-valve should become disabled so as to be taken out, could the engine be run as a simple engine?

Yes, by taking out the H.P. valves on both sides and throttling close, with lever well up in quadrant. In this case the H.P. piston-heads would be balanced by live steam and the cylinders would be lubricated by the entering steam, by which the lubricant is carried. Care should be exercised in running in this manner.

With a broken main rod, or valve-rod broken outside of chest, what should be done?

The ports should be covered by placing the valves in centre of travel, fastened in position by the usual means, and that side of engine disconnected.

With the H.P. piston-heads balanced, which piston-heads would be doing the work?

The low-pressure heads would be doing the work, the engine operating as a simple engine.

With the L.P. valves taken out how would the engine operate?

The engine would run as a high-pressure engine with the low-pressure cylinders doing no work, because the exhaust steam from the H.P. would escape direct to stack. Care would have to be taken to lubricate the L.P. cylinders to prevent cutting.

THE WEBB COMPOUND LOCOMOTIVE.

The accompanying illustration, Fig. 110, from *Industries*, shows the latest compound engine built by the London & Northwestern Company at its shops at Crewe. This engine is of the Webb three-cylinder type, having two high-pressure cylinders outside, connected to one pair of drivers, and a single low-pressure cylinder inside, connected to the other pair. There is no connection between the two pairs of drivers. As shown by the engraving, the driving-wheels are all forward of the fire-box, and there are two pairs of bearing-wheels, one behind the fire-box carried rigidly in the frames, and one pair forward having Mr. Webb's radial axle-boxes, which give a degree of flexibility approaching that of a two-wheeled truck.

The general plan of the engine made necessary the adoption of a very long boiler, and one of a peculiar type has been used.

As shown by the drawing, Fig. 111, a combustion-chamber is arranged in the barrel of the boiler between the fire-box and smoke-box tube-plates so as to divide the boiler into two lengths. The general arrangement will be clearly understood from the illustration, which shows a boiler so constructed in longitudinal section. *A* is the main fire-box, and *B* its tube-plate, from which tubes *C* extend to a tube-plate at one end of the combustion-chamber *D*, and at the other end of which another tube-plate has further tubes *C* leading to the smoke-box tube-plate *E*. The combustion-chamber

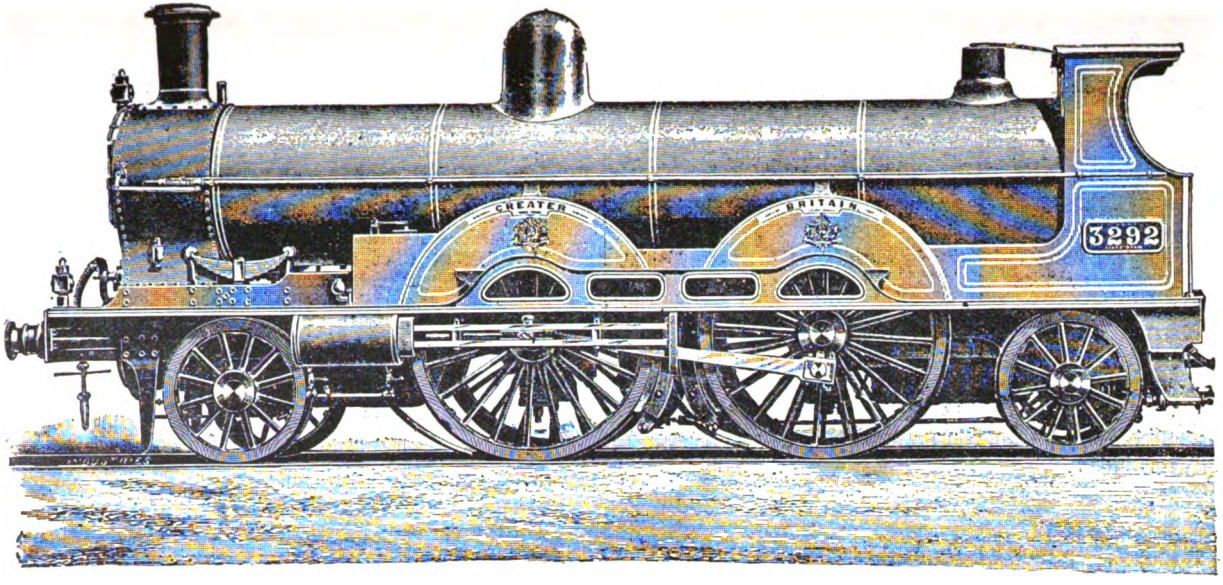

FIG. 110.—WEBB THREE-CYLINDER COMPOUND.

D is secured to the barrel of the boiler by stays *F* riveted to angle-irons. At the lower part of the com-

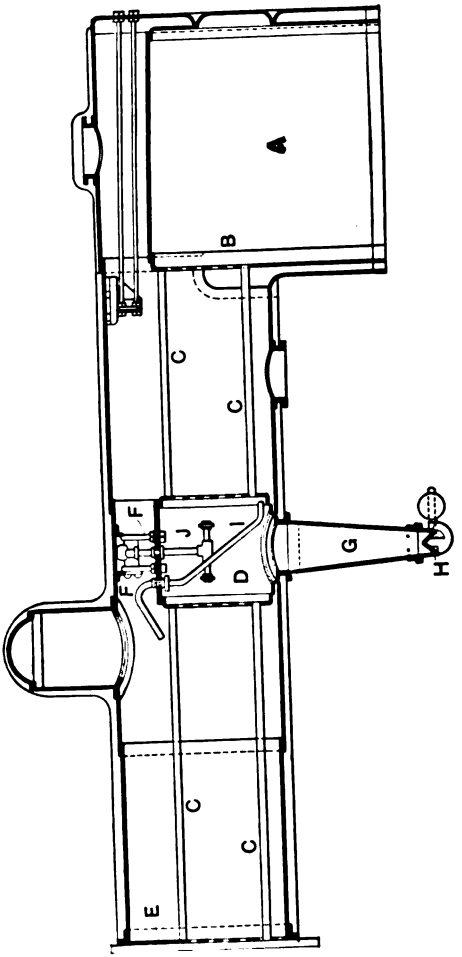

FIG. 111.—WEBB LOCOMOTIVE BOILER.

bustion-chamber is a conical tube, *G*, closed by a valve, *H*, and weighted lever, which latter can be

operated from the foot-plate of the engine, so that any ashes collected in the tube *G* may be allowed to fall out when required. *I* represents a circulating tube, of which any number may be arranged, either as represented in the illustration or in any other suitable manner. A pipe, *J*, is also arranged to be controlled by a suitable valve, which may be worked from the foot-plate, and which pipe is provided with two branches, each terminating in a rose, so that when steam is allowed to escape from them any soot or ashes will be blown from the open ends of the tubes *C*.

The described locomotive represents the latest English design of a modern locomotive as applied to that country, and somewhat resembles the Atlantic type of engine of the United States in general use, illustrated in Fig. 277. The data given show very clearly the work done by the engine in actual service.

The barrel of the boiler is 51 inches in diameter and 18 feet 6 inches long. The combustion-chamber is 2 feet 8½ inches long, and there are two sets of tubes, each set being 156 in number and 2⅛ inches in diameter. The rear tubes, extending from the fire-box to the combustion-chamber, are 5 feet 10 inches long, and the forward tubes, from the combustion-chamber to the smoke-box, are 10 feet 1 inch in length. The outside fire-box casting is 6 feet 10 inches long. The grate-area is 20.5 square feet. The heating surface is: fire-box, 120.6; combustion-chamber, 39.1; rear tubes, 493.0; forward tubes, 853.0; total, 1505.7 square feet. The working pressure is 175 pounds in ordinary service.

The leading- and trailing-wheels are of the same diameter, 49½ inches; the driving-wheels are 7 feet 1 inch. The distance between leading-axle and

forward, or high-pressure, driving-axle is 8 feet 5 inches; the distance between driving-axles is 8 feet 3 inches, and from rear, or low-pressure, driving-axle to the trailing-axle, 7 feet; thus making the total wheel-base 23 feet 8 inches, and the rigid wheel-base 15 feet 3 inches. The driving-axles have $8\frac{1}{2} \times 13\frac{1}{2}$-inch journals, and the leading- and trailing-axles $6\frac{1}{2} \times 12$-inch journals.

The weight of the engine in working order is 116,700 pounds, of which 28,670 pounds are carried on the leading-wheels, 34,720 pounds on the forward drivers, 34,720 pounds on the rear drivers, and 18,590 pounds on the trailing-wheels.

The frames are of the ordinary English plate type, the main frame being of 1-inch steel plate. The total length of frame is 32 feet $5\frac{1}{4}$ inches over all.

The two H.P. cylinders are each 15 inches in diameter and 24 inches stroke. The steam-ports are $11 \times 1\frac{1}{2}$ inches, and the exhaust-ports 11×5 inches. The valve-motion is of the ordinary curved-link type; the valves are of the piston type, and have 4 inches maximum travel, $\frac{15}{16}$ inch outside lap, and $\frac{3}{16}$ inch lead in full gear. There are four guides, with a cross-head of corresponding pattern, and the connecting-rods are 8 feet 3 inches long. The crank-pins have 4×5-inch bearings.

The single L.P. cylinder is 30 inches in diameter and 24 inches stroke. The steam-ports are $20 \times 2\frac{3}{4}$ inches, and the exhaust-port $20 \times 5\frac{1}{4}$ inches. The valve is worked by Mr. Webb's single-eccentric motion; it has $5\frac{1}{2}$ inches travel and $1\frac{3}{16}$ inches outside lap. The connecting-rod is 6 feet 3 inches long; the bearing on the crank-axle is $7\frac{3}{4} \times 5\frac{1}{2}$ inches.

On its first trip after completion the *Greater Britain*, as this engine is named, was sent from Crewe to London, 157½ miles, with an experimental train, consisting of twenty-three six-wheeled passenger coaches. The weight of the train at starting was: Locomotive, 116,480 pounds; tender, 56,000 pounds; cars, 684,260 pounds; total, 856,840 pounds, carried on 82 axles. The ratio of the weight of train to that of engine and tender was 3.96 : 1. The length of the train was: Engine and tender, 54 feet; cars, 880 feet; total, 934 feet.

The time occupied in the trip was 4 hours 2 minutes, including a stop of 21 minutes at Rugby. The average speed between Crewe and Rugby was 41.18 miles an hour; between Rugby and Euston Station, in London, 44.59 miles an hour. The particulars of the run are given as follows:

Stations.	Running Times.	Distance in Miles.	Speeds in Miles per Hour.	Weather.
Crewe.....dep.	11:04 A.M.			Fine.
Whitmore.....pass.	11:25 "	10½	30	"
Stafford..... "	11:42 "	14	49 41	"
Rugeley ..... "	11:55 "	9¼	42.69	Strong
Lichfield..... "	12:06 P.M.	8	43.63	Side wind
Tamworth ..... "	12:14 "	6¼	46.87	"
Nuneaton..... "	12:33 "	13	41.05	"
Rugby .....arr.	12:54 "	14½	41.42	"
" .....dep.	1:15 "			
Blisworth.....pass.	1:46 "	19¼	38.22	"
Wolverton ..... "	2:00 "	10½	45	"
Bletchley ..... "	2:07 "	5¾	49.28	"
Leighton..... "	2:15 "	6½	48.75	Rain.
Tring..... "	2:28 "	8½	39.23	"
Watford ..... "	2:45 "	14¼	50.29	"
Willesden..... "	2:58 "	12	55.38	"
Euston.....arr.	3:06 "	5¼	39.37	"

The results are computed by Mr. Webb as follows: The coal consumed on the journey was 34 pounds per mile, or 0.089 pound per ton of train per mile; the coal consumed, including 10 cwt. used for raising steam before starting, for the single journey from Crewe to Euston, was 41.1 pounds per mile, or 0.107 pound per ton of train per mile; if the usual double journey from Crewe to Euston and Euston to Crewe were run, the 10 cwt. for raising steam would be divided over the double trip, or 5 cwt. for raising steam, which would give a consumption of coal of 37.5 pounds per mile, or 0.098 pound per ton of train per mile. The tons here are, of course, the English ton of 2240 pounds.

The total quantity of water evaporated on the journey was 5896 gallons, giving the high average of 10.96 pounds of water evaporated per pound of coal consumed.

DESCRIPTION OF INTERCEPTING-VALVE, RICHMOND LOCOMOTIVE AND MACHINE WORKS COMPOUND.

The various drawings show sections through the low-pressure cylinder-saddle, with the valves in their four relative positions.

Fig. 114 shows the position of valves in starting automatically, just after the throttle is opened;

Fig. 115 shows the same at maximum pressure in low pressure steam-chest;

Fig. 116 shows the position when working compound; and

Fig. 117 shows position when working simple.

The high-pressure cylinder exhausts into a receiver, which is placed inside the smoke-box and opens into the chamber *F*. The intercepting-valve, as shown at *V* in the several views, has a piston on its outer end which acts as an air dash-pot, preventing any slamming of the valve. Around the stem of this valve is a sleeve *L*, which has an axial movement on the stem, and acts as an admission- and reducing-valve to the low-pressure steam-chest when starting and when working simple. Valve *H* is a plain bevel-seated winged valve, and is called the emergency-valve, as by its use the engineer can, at will, operate as a simple engine.

When starting, steam from the boiler goes to the high-pressure cylinder in the ordinary way, and also to the port *C* through a two-inch steam-pipe connected to the dry pipe. When the throttle is opened, no matter in what position the valves stand, there is no

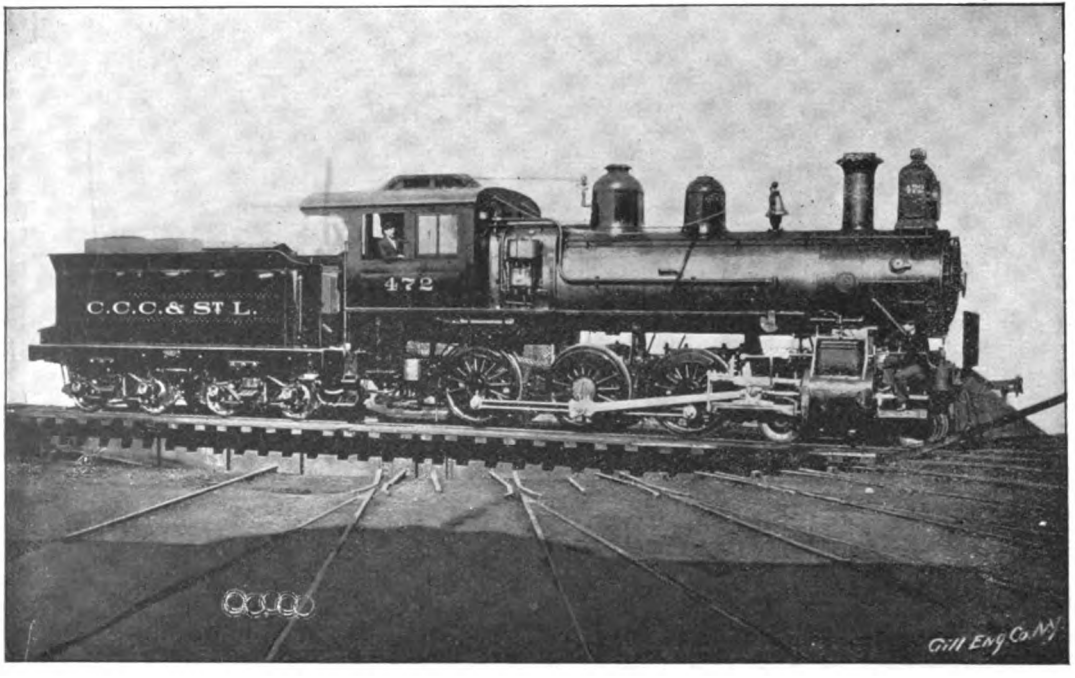

FIG. 112.—RICHMOND COMPOUND FOR C., C., C. & ST. L. R. R.

Diameter of Drivers, 56".
Weight on Drivers, 107,100 lbs.
Diameter of Boiler, 60".
Total Weight, 136,000 lbs.
Diameter of Cylinders, H.P. 19" × L.P. 30" × 24" stroke.

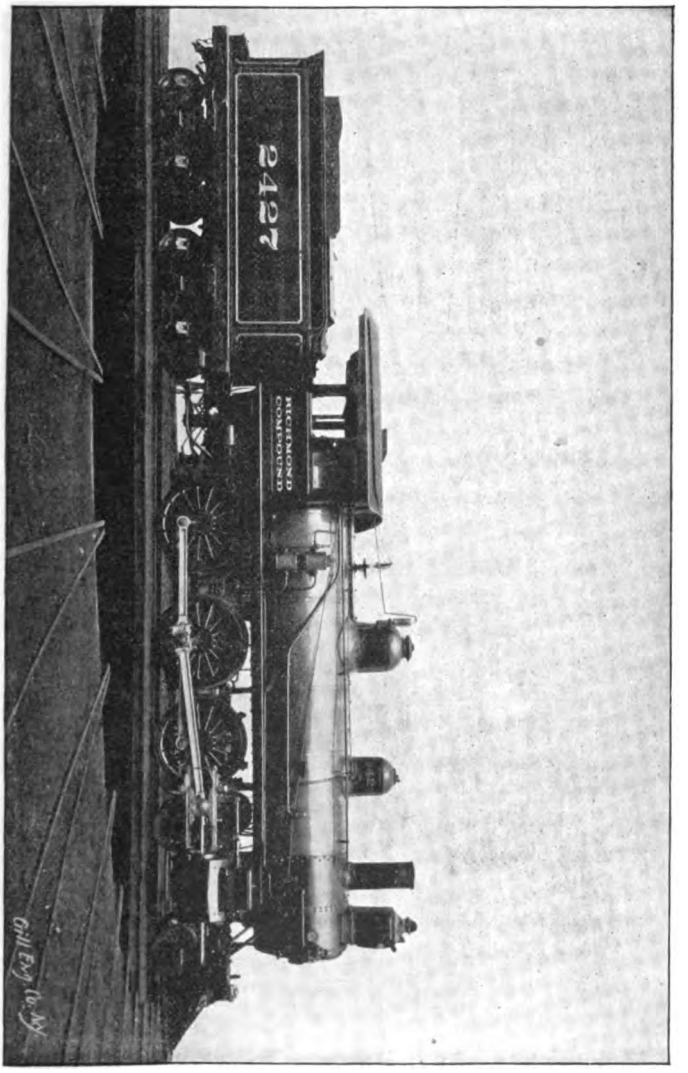

FIG. 113.—RICHMOND LOCOMOTIVE AND MACHINE WORKS COMPOUND.

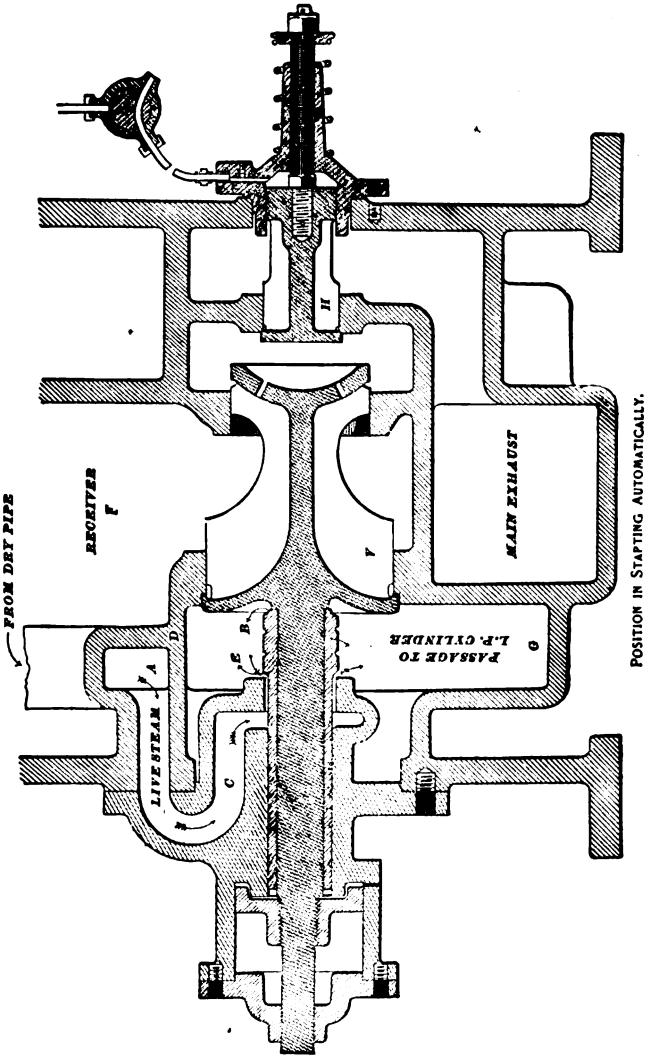

POSITION IN STARTING AUTOMATICALLY.

FIG. 114.

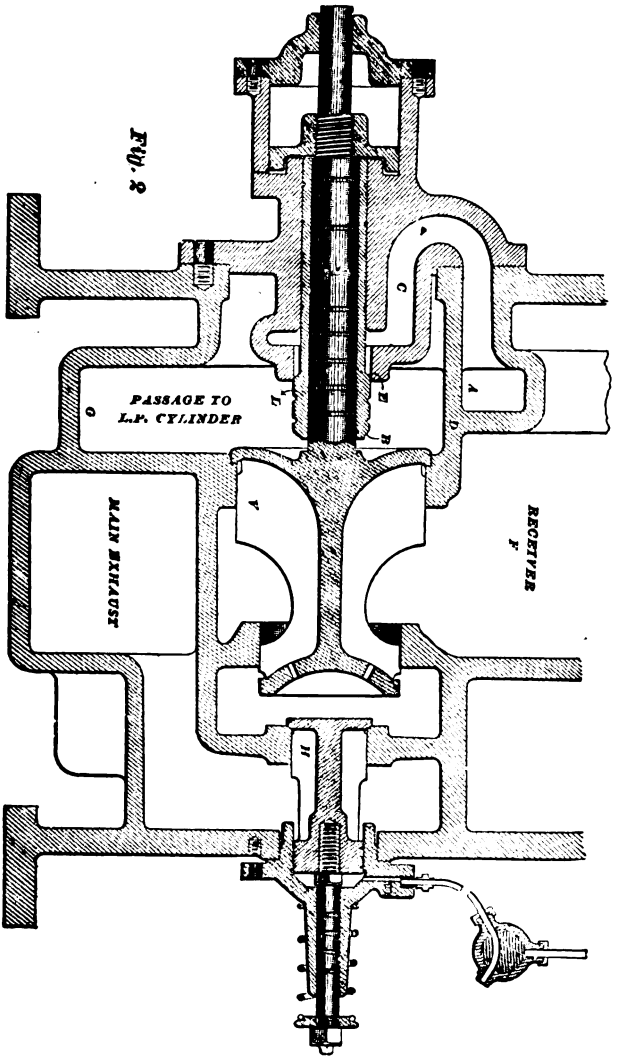

POSITION IN STARTING AT MAXIMUM PRESSURE IN L. P. STEAM CHEST.

FIG. 115.

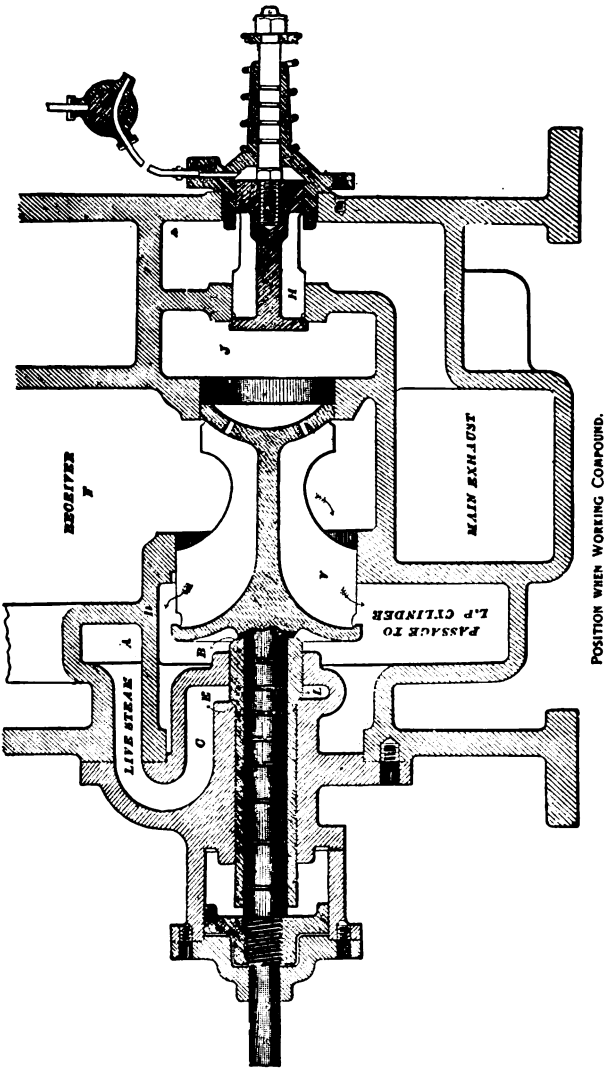

POSITION WHEN WORKING COMPOUND.

FIG. 116.

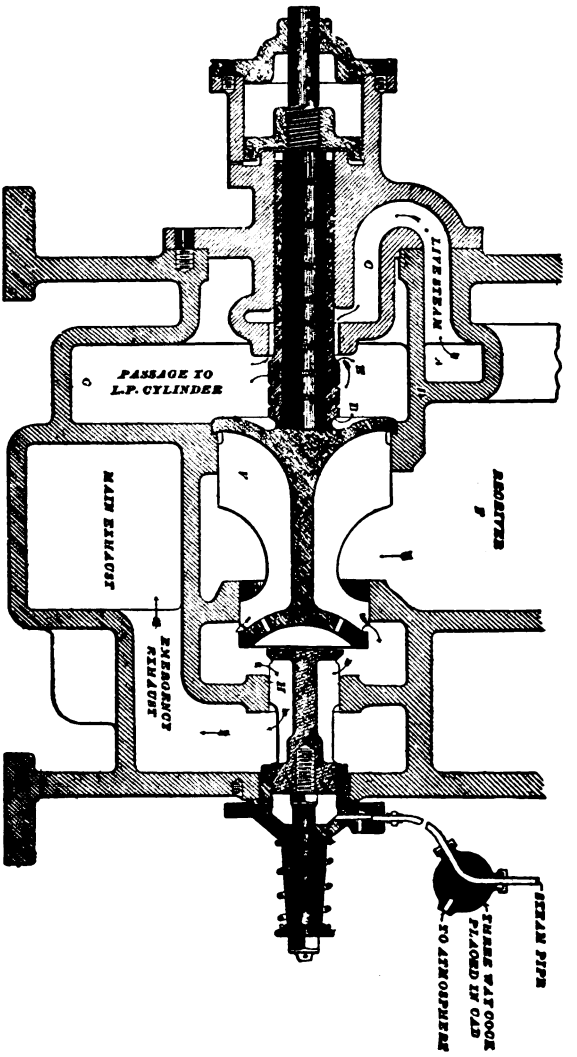

POSITION WHEN WORKING AS SIMPLE ENGINE.

FIG 117.

pressure in the receiver *F*, and the pressure on the shoulder *E* of the sleeve *L* moves the sleeve and valve *V* to the right, closing the receiver, and letting steam past the shoulder *E* into the low-pressure steam-chest *G*, as shown in Fig. 114.

Now, since the area of the end *B* of the sleeve *L*, shown in Fig. 115, is say twice that of the shoulder *E*, half of the boiler-pressure will move the sleeve *L* to the left, cutting off steam through port *C*, and thus equalizing the work in both cylinders, since the reduced pressure is thus maintained in the low-pressure steam-chest by the reciprocating action of the sleeve. After say one and one half revolutions the pressure accumulates in the receiver *F*, due to the exhaust from the high-pressure cylinder, and, acting against the large face of valve *V*, moves this valve to the left, carrying the sleeve with it, thus opening a straight connection between the high-pressure exhaust and the low-pressure steam-chest, and at the same time permanently cutting off live steam from port *C*, as shown in Fig. 116.

In starting on grades, or when exerting maximum power, the engineer can move the three-way cock in the cab, letting boiler-steam behind the piston on the emergency-valve *H*, and holding it open against its spring. This exhausts the small cavity *J*, in which the pressure is equalized with the receiver through holes in the rear end of valve *V*, and then the valve, being unbalanced, moves with the sleeve *L* instantly to the right, assisted by steam-pressure on the shoulder *E* of the sleeve. The high-pressure cylinder has now a separate exhaust around the end of

valve *V*, through valve *H*, into the main exhaust, since the intercepting-valve remains closed, due to no accumulated pressure in the receiver *F*. The low-pressure steam-chest then gets reduced-pressure steam direct from the boiler through port *C* and reducing-valve *L*, as shown in Fig. 117.

Except when working simple, the valves act entirely automatically. The lubricator to the low-pressure cylinder enters port *A* and thus ensures constant lubrication to the intercepting- and reducing-valve.

Owing to the small area of port *C*, and the contracted exhaust through valve *H* the engine develops less power as a simple engine than as a compound, at a speed of over say eight or ten miles an hour, and thus the runner is compelled to work compound.

Should either side break down, the emergency-valve can be opened, and the engine brought in on one side like an ordinary simple engine.

BREAKING DOWN OF RICHMOND COMPOUND.

Q. What should be done when a main-rod is broken or taken down on H. P. side?

A. The valve should be put in centre of seat on broken side and clamped fast; piston-head blocked in back end of cylinder by cross-head in guides; run in with L. P. side.

Q. How can steam be gotten into the L. P. cylinder?

A. By the starting- and reducing-valves on L. P. side, which will act the same as when running a simple engine.

Q. Would there be any pressure in receiver when running in this manner?

A. No; not as long as steam did not leak past the H. P. valve or the intercepting-valve; the emergency-valve could be opened occasionally to exhaust any pressure that might accumulate in receiver, so as not to cause the intercepting-valve to open, thus preventing live steam from entering the receiver from the boiler.

Q. What should be done in case of a broken valve-stem on H. P. side?

A. Do the same as for broken or taken down main-rod; come in with L. P. side.

Q. What should be done in case the main-rod on the L. P. side was taken down from any cause?

A. Block valves in centre of seat on that side; put piston head in back-end of cylinder; block cross-head; open emergency-valve of intercepting-valve.

Q. Why should this be done?

A. In order to let the exhaust steam from H. P. side escape into main exhaust-passage; otherwise the exhaust would back up in the receiver.

Q. What would be the effect if this happened?

A. This would cause back pressure on the H. P. piston-head, reduce the power, and if pressure became great enough would open the intercepting-valve on the L. P. side.

Q. What should be done in case of broken valve-stem on L. P. side?

A. Same as for main-rod taken down; run in with H. P. side.

Q. When broken down on L. P. side, how is it pos-

sible to prevent live steam from getting into L. P. steam-chest?

A. By blocking the intercepting-valve open, thus holding the starting- and reducing-valves closed.

Q. How can the intercepting-valve be kept open?

A. By putting a block behind the air or dash-pot piston-head.

Q. If the intercepting-valve remained open, due to sticking from any cause, and would not act automatically, what would be the proper way to try to close it?

A. Open the emergency-valve; if this would not close it, tap on end of stem projecting through dash-pot cylinder.

Q. What else would cause the intercepting-valve to fail to close?

A. The starting- and reducing-valves might stick, thus preventing live steam getting between that valve and seat to cause it to open and close intercepting valve.

Q. What should be done?

A. Same as for intercepting-valve not working.

Q. If a piece were broken out of intercepting-valve between the L. P. cylinder and receiver, would it open?

A. Yes.

Q. Why, and what would be the effect?

A. The pressure would act on each side of valve having the largest area; also live steam from reducing-valve would flow into the receiver until the intercepting-valve closed the reducing-valve.

Q. Would the engine operate as a compound engine?

A. Not until the reducing-valve was closed.

Q. What should be done to make the engine operate

as a compound in case the intercepting-valve did not close the reducing-valve?

A. Pull the intercepting-valve open, thus closing the reducing- and starting-valves.

Q. How could this valve be held open, if necessary?

A. By putting clamp on stem projecting through dash-pot cylinder close to the head.

Q. Could the L. P. side be operated as a simple engine if the H. P. side were broken down, when a piece was broken out of intercepting-valve?

A. Yes; but the receiver would be filled with live steam.

Q. Would it be possible to operate this engine compound with the emergency-valve broken out?

A. Yes, by taking out broken valve and putting in wooden plug in the valve-seat, and putting on the gland as when valve was in position, letting the end of plug bear against gland.

Q. If the receiver was cracked so as to cause an excessive back draught, what should be done?

A. Would open emergency valve and run as a simple engine.

Q. Why would you do this?

A. To see if relieving the pressure in receiver would lessen the effect of back draught.

Q. If not, what could be done?

A. Disconnect H. P. side and run in with L. P. side.

Q. How long will this engine operate as a simple engine?

A. As long as the emergency valve is kept open.

CHAPTER XII.

RECENT AMERICAN COMPOUND LOCOMOTIVES.

FOUR-CYLINDER ARTICULATED COMPOUND LOCOMOTIVE, B. & O. R. R.

HEAVIEST LOCOMOTIVE BUILT TO DATE.

THIS locomotive represents a radical advance from the usual type of locomotives and develops more horse-power than has ever before been attainable within the limitations governing the construction of locomotives. The use of four cylinders, two high- and two low-pressure, gives an opportunity for compounding under the most favorable conditions. The cylinders are connected, one pair to the rear axle of each three pairs of driving-wheels, the rear high-pressure group being rigidly connected to the boiler, while the forward low-pressure group is on a revolving frame, the motion of which is about its centre and is duly restrained by springs which also tend to bring the forward group of wheels into proper alignment when the engine enters a tangent.

Boiler.

The boiler is of the straight-top radial type with wide fire-box set above the frame; the outside diameter at front end is 84 inches. The fire-box is 108 inches long

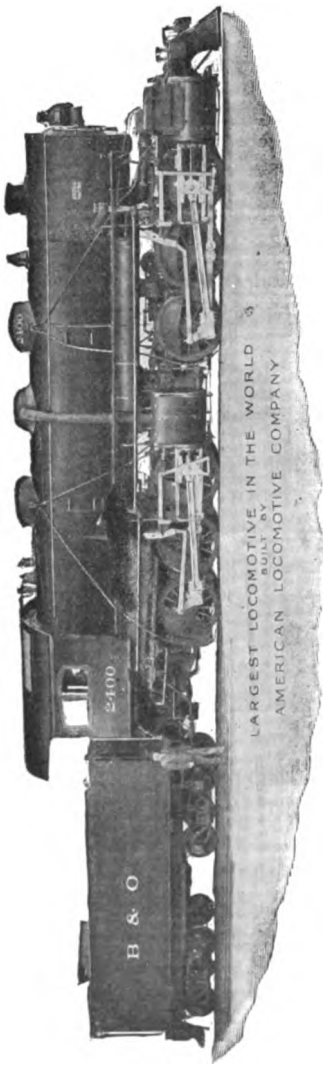

FIG. 118.—B. & O. Four-cylinder Compound Articulated System.

by 96 inches wide inside. The front end, or smoke-arch, is 84 inches long. The two sand-boxes and the steam-dome are on top of the boiler. There are 436 2¼-inch tubes 21 feet long. The safety-valves and whistle are placed over the fire-box, next to the cab. Working pressure per square inch is 235 pounds.

Heating-surface in tubes.....	5366.3	square feet
Heating-surface in fire-box.....	219.4	" "
Total heating-surface.....	5585.7	" "
Grate area.....	72.2	" "

The steam-pipe for high pressure leaves the dome and passes down to the high-pressure cylinders on the outside of the boiler. This is common in European practice, but not in the United States. The pipe is 5 inches in diameter, and is covered to prevent condensation.

Cylinders.

The cylinders are placed at the forward end of each truck of three sets of drivers, the high-pressure cylinder being about the centre of the engine and attached to the under side of boiler as shown. The high-pressure cylinders are 20×32 inches, using piston-valves (see page 120, Brooks Locomotive).

The exhaust-steam from the high-pressure cylinders is carried to the low-pressure cylinders by a pipe connected between the high-pressure and low-pressure saddles, the pipe is connected to a steam passage to each low-pressure steam-chest. Slide-valves are used for the low-pressure cylinders. The exhaust-pipe from the low-pressure cylinders is connected to the exhaust-nozzles in the front end of the smoke-box. The low-pressure cylinders extend

beyond the smoke-arch. The exhaust-pipe is under the smoke-arch as shown. Flexible or swivel joints are provided in the steam-pipes in order to allow for expansion and movement of the truck. The diameter of low-pressure cylinder is 32 inches by 32 inches—42 over all—in length.

Valve-motion.

The valve-motion used is the Walschaert and outside-connected motion as explained and shown in diagram (Fig. 153). The reverse-lever is arranged to be worked by hand or compressed air. The air-reverser is carried under the cab as shown. There is a motion for each cylinder. The high-pressure cylinders are provided with intercepting, reducing, and high-pressure exhaust-valves, permitting the use of live steam at reduced pressure in the low-pressure cylinders when required in starting.

Wheel-base.

The wheel-base of each group of drivers is 10 feet, and that of the engine is 30 feet 8 inches. The main crank-pin of each group of driving-wheels is on the rear driving-wheel, to which the main-rod is attached, the usual side-rod connecting the other drivers. There are springs over each driving-box, with equalizers between each pair of driving-boxes in the forward truck or group, dolphin bars and springs being used on the rear group on account of the fire-box. The total weight on the drivers is 334,500 pounds when engine is in full working order, or 10,900 pounds per running foot of wheel-base. The normal tractive force when running compound is about 70,000 pounds, which can be increased by running as a simple engine to 85,000 pounds.

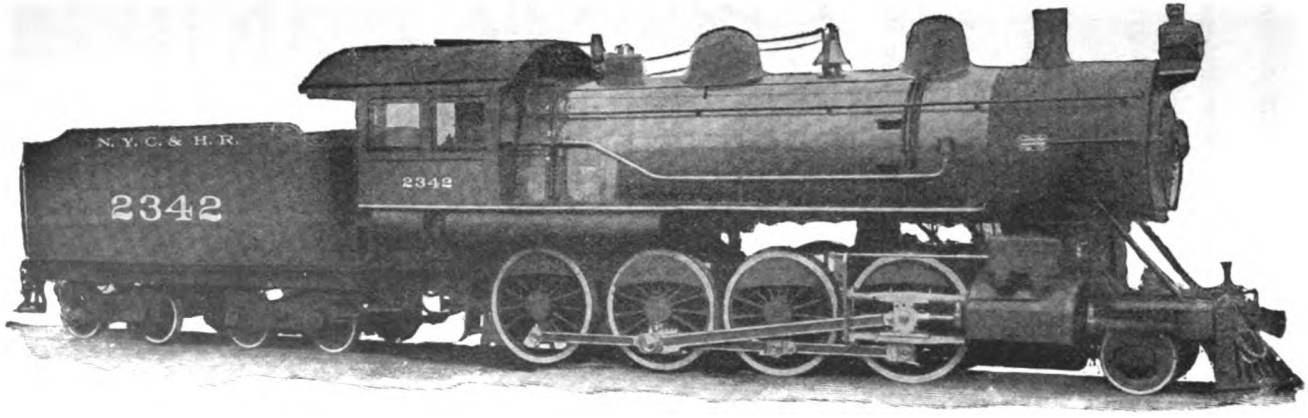

FIG. 119.—Schenectady Two-cylinder Compound, built for the New York Central & Hudson River Railroad.

The large diameter of the boiler necessitates a very low dome and stack, the headlight being placed on the front end of the smoke-box. Fig. 118 is a photograph of the engine.

SCHNECTADY CROSS-COMPOUND. LATEST IMPROVEMENTS (FIG. 119.)

Fig. 121 is a sectional view through the smoke-arch and cylinder-saddles, showing the steam-passages, receiver, and the location of the intercepting-valve in the low-pressure cylinder-saddle.

Fig. 122 is a transverse section through the low-pressure cylinder-saddle *XY* and *WZ*. Section *XY* shows the passages for admitting live steam into the low-pressure cylinder, and section *WZ* the outlet passage from separate exhaust-valve to the exhaust-pipe.

Fig. 123 is a vertical section through the low-pressure cylinder-saddle and intercepting-valve, showing the intercepting- and separate exhaust-valves in the position taken when engine is working simple.

Fig. 124 is the same section as Fig. 123, but shows the position of the intercepting- and separate exhaust-valves when the engine is working compound. With the arrangement of valves shown in these figures, the engine can be started and run either compound or simple, and can be changed from compound to simple, or from simple to compound, at the will of the engineer.

General Description.—As the throttle is opened, steam from the boiler, through the dry pipe, is admitted directly to the high-pressure steam-chest, and at the same time to chamber *E*, surrounding the reducing-valve *L*, Figs. 123 and 124.

The exhaust from the high-pressure cylinder, by means of the receiver-pipe, passes to chamber surround-

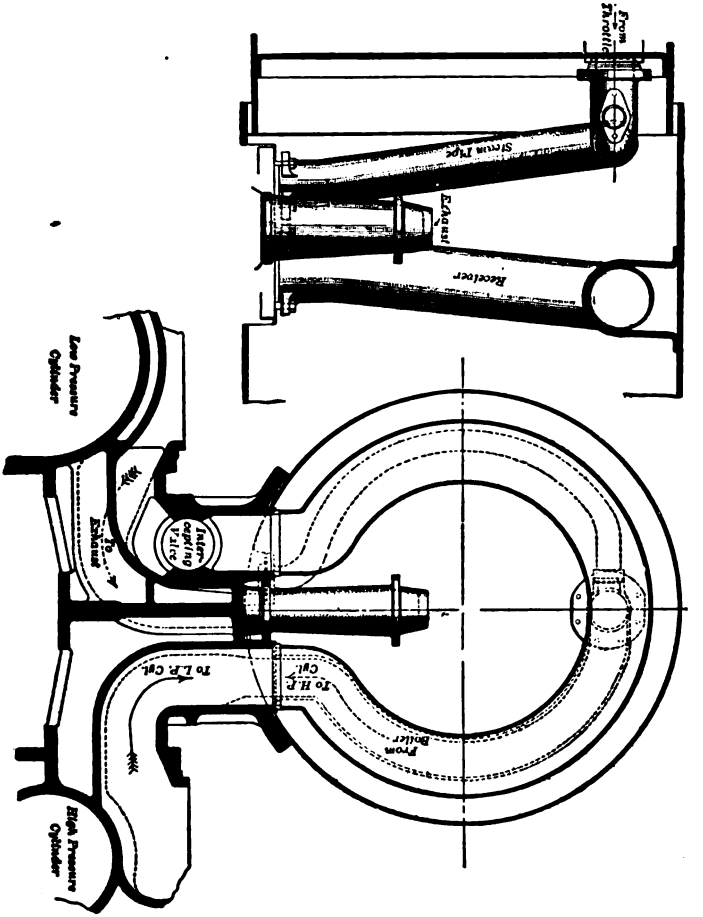

FIG. 120.

FIG. 121.

ing the intercepting-valve, and thence to the low-pressure steam-chest when working compound, intercepting-valve in position shown on Fig. 124, or to the atmosphere,

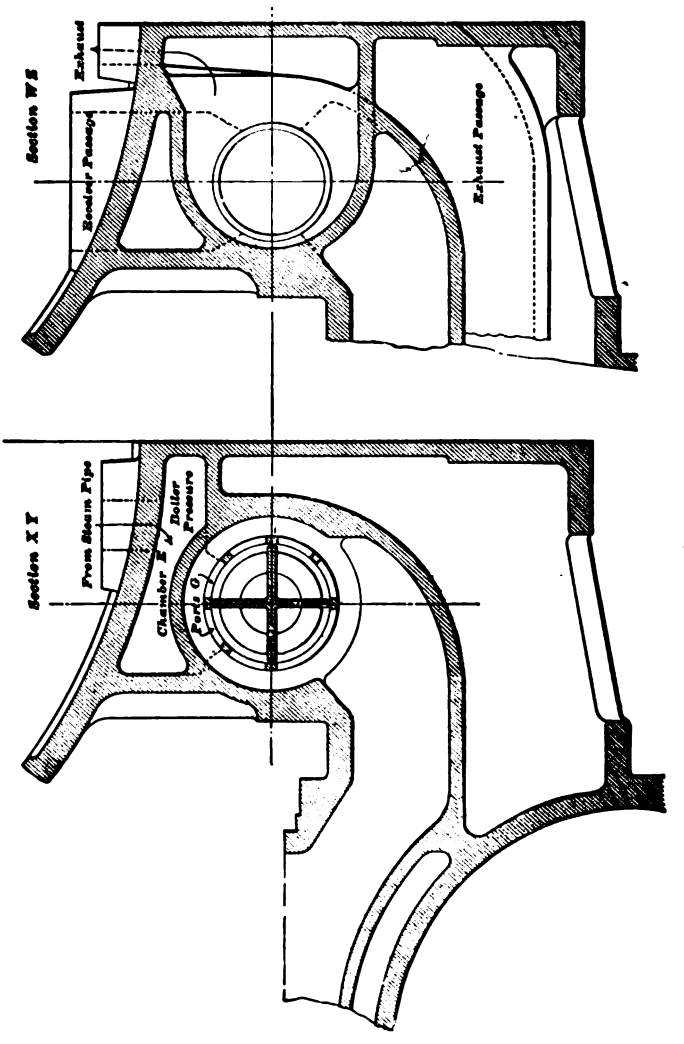
Section W Z
Exhaust
Exhaust Passage
Exhaust Passage
Section X Y
From Steam Pipe
Chamber E
Boiler Pressure
Ports G

FIG. 122.

through separate exhaust-valve and stack, when working simple, valve in position shown on Fig. 123.

The low-pressure exhaust passes directly to the stack at all times.

The intercepting-valve opens and closes the connection between the two cylinders.

The separate exhaust-valve opens and closes the connection between the high-pressure cylinder and the atmosphere.

The function of the reducing-valve, which operates only when the engine is working simple or starting, is to control the admission of steam from the boiler to the low-pressure cylinder, in order that the pressure of steam admitted to the low-pressure cylinder shall have the same ratio to the steam in the high-pressure cylinder as the volume of the high-pressure cylinder is to the volume of the low-pressure cylinder.

The oil dash-pot insures a steady movement of the intercepting-valve without shock.

The intercepting- and reducing-valves operate automatically by means of the steam-pressure acting on the difference of areas of the ends of the valves. The movement of the reducing-valve is cushioned by the small air dash-pots shown. The separate exhaust-valve is operated by the engineer, by means of a three-way cock in the cab. To open the separate exhaust-valve, the handle of the three-way cock is moved to the position provided for admitting pressure against the piston *A*, Fig. 121. Moving the handle in the opposite direction relieves the pressure against *A*, and the spring, which is shown in the figure, shuts the valve. The separate exhaust-valve can be so connected as to operate either by air or steam.

Starting Simple (Fig. 123).—The handle of the three-way cock in the cab is moved by the engineer so as to

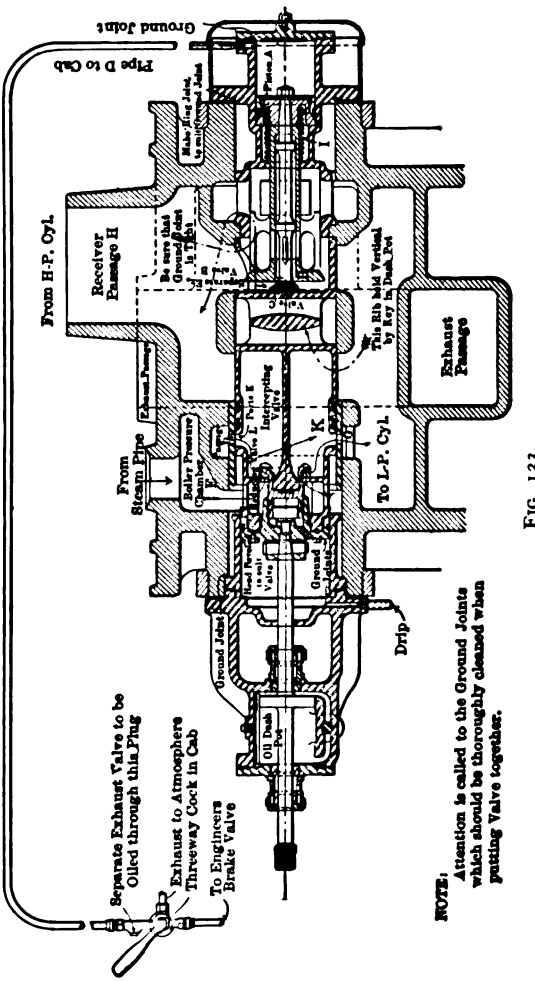
Ground Joint
Pipe D to Cab
From H.P. Cyl.
Receiver Passage H
Exhaust Passage
From Steam Pipe
To L.P. Cyl.
K
Drip
Separate Exhaust Valve to be Oiled through this Plug
Exhaust to Atmosphere Threeway Cock in Cab
To Engineers Brake Valve
NOTE:
Attention is called to the Ground Joints which should be thoroughly cleaned when putting Valve together.

FIG. 123.

admit pressure through the pipe *D* against the piston *A*, forcing it and the valves *B* and *C* to the position shown

on Fig. 123. As the throttle is opened, steam is admitted directly from the boiler into the passage *E*, forcing the intercepting-valve into the position shown (Fig. 123); thence the steam passes through the intercepting-valve by the ports *KK*, and the passage *GG*, through the reducing-valve to the low-pressure steam-chest; at the same time steam from the boiler is admitted directly, by means of the steam-pipe, to the high-pressure steam-chest. The exhaust from the high-pressure cylinder passes to the atmosphere by means of the receiver-passage *H* and the separate exhaust-valve *B*. Steam from the low-pressure cylinder is exhausted directly to the atmosphere.

To Change from Simple to Compound (Fig. 124).—Having started simple, to change to compound the handle of the three-way cock in cab is turned so that pressure is released from the piston *A*. The separate exhaust-valve will then be closed by the spring *I*. The pressure in the receiver, due to the exhaust from the high-pressure cylinder, will rise and force the intercepting-valve to the left, that is, to the position shown in Fig. 124, thereby opening the passage for the exhaust steam from the high-pressure cylinder, through the receiver, to low-pressure steam-chest. The movement of the intercepting-valve to the left also closes the passage *GG*, thereby shutting off the admission of steam directly from the boiler to the low-pressure steam-chest.

Starting Compound.—To start the engine compound, the separate exhaust-valve is left closed, as in Fig. 124. As the throttle is opened, the steam-pressure in the passage *E* will force the intercepting-valve to the right or to the closed position; at the same time steam directly

from the boiler will be admitted to low-pressure steam-chest through ports *KK* and passage *GG*. The high-

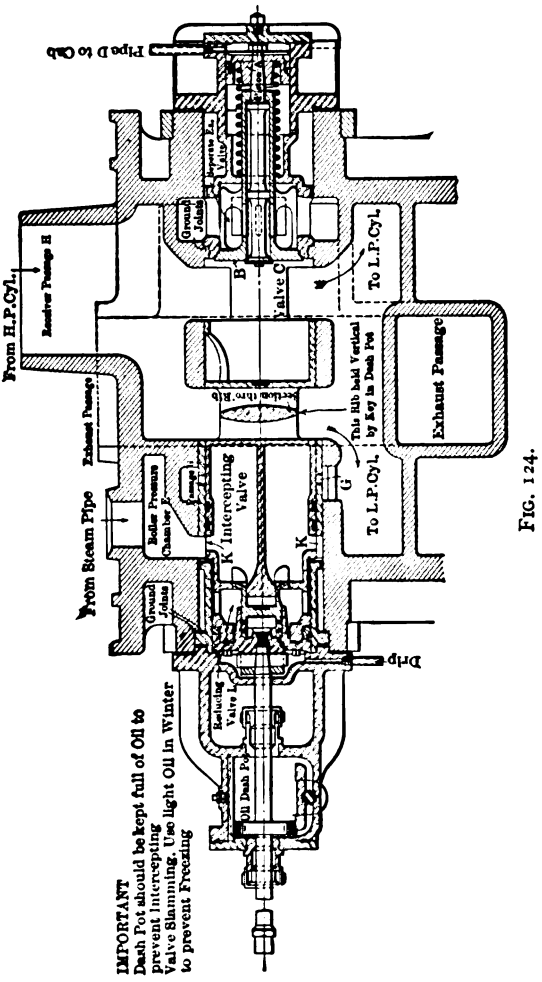

FIG. 124.

pressure cylinder will exhaust into the receiver until the pressure is sufficient to force the intercepting-valve

to the left, as shown in Fig. 124, when the engine will work compound. The change to compound working takes place at from one-half to three-quarters of a revolution of the driving-wheels.

Compound to Simple.—With the engine working compound, if the engineer wishes to run the engine simple to prevent stalling on a heavy grade, the handle of the three-way cock should be placed in same position as for starting simple. This opens first the small bleeding-valve *C*, Figs. 123 and 124, and then the separate exhaust-valve. The bleeding-valve relieves the pressure, and thus permits the main valve *B* to be operated more easily. As soon as the separate exhaust-valve is open, the pressure in the receiver drops and the intercepting-valve is forced against the seat to the right, by means of the pressure in chamber *E*, and the engine works simple as before. Engines should be worked simple no longer than absolutely necessary.

Lubrication.—A pipe from the sight-feed lubricator located in the cab, leading directly to chamber *E*, is provided, by means of which both the intercepting- and reducing-valves are lubricated. One drop per minute is sufficient for these parts. A small oil-cock, in three-way cock located in cab, provides for lubricating the separate exhaust-valve and attendant parts, and oiling once a day with a small quantity of cylinder-oil provides sufficient lubrication.

When using steam, it is good practice to feed about two-thirds of allowance of cylinder lubrication to H.P. cylinder. When drifting down long grades, this should be reversed, on account of the larger surface to be lubricated on L.P. side. Always run with lubricator steam-valve wide open.

By-pass Valves.—Some of the compound locomotives recently built are equipped with by-pass valves, provided to admit of engines drifting more freely. These valves, more particularly on the low-pressure side, should be examined occasionally, by removing the cap, to insure that they are in good working order. On new engines the by-pass valves should be cleaned frequently, as their free movement is liable to be hindered by gumming or the presence of core-sand.

Should a by-pass valve become broken, or in any way defective, take off the valve body and insert a blind gasket between it and the cylinder.

Carrying Water.—Most of the later compound locomotives are equipped with piston-valves, and it is very necessary that the cylinders should be kept free from water. Great care should be taken to open cylinder-cocks when starting, and before opening throttle after drifting down grade. Careful attention should also be given to avoid carrying water too high in boiler. Carrying water high in the boiler, and thus causing wet steam in cylinders, is injurious to compound locomotives, no matter whether slide-valves or piston-valves are used.

Oil Dash-pot.—This should be kept full of oil to prevent intercepting-valve from slamming. Breakages of intercepting-valves are nearly always due to neglect of this rule.

Dash-pots should be filled with common car- or engine-oil, thinned with kerosene when necessary, in winter.

The dash-pot stuffing-boxes should be kept packed, to avoid leakage of oil.

Drifting.—In drifting, the three-way cock should be in simple position whenever it can be done without too

much loss of air by leakage of separate exhaust-valve or piping. Most of the recent compound locomotives are provided with a small drifting-valve in main throttle-valve, so arranged that it can be opened with a slight movement of the throttle-lever. It is considered good practice to admit a little steam to cylinders, when drifting, through this valve, or, if not provided with a small drifting-valve, by a slight opening of main throttle.

Examination.—Enginemen should ascertain if separate exhaust-valve is in good working condition before starting out with train, by trying the engine, simple and compound, before coupling to the train. The separate exhaust-valve should be examined at intervals, so that the spring and other parts are kept in proper condition. Should the engine refuse to move after the throttle is opened, it will usually be found that it stands on centre on high-pressure side (in position to take steam on low-pressure side); and it will be due to either the intercepting- or reducing-valve sticking, which is always the result of lack of lubrication for intercepting-valve, or carrying too much water in the boiler. Which of these valves are sticking can be ascertained from the position of the intercepting-valve stem. In starting the engine, if the intercepting-valve stem extends clear out about 7 inches, it would be the intercepting-valve; and, unless some of the ports are broken, a slight tap on the end of the stem, with throttle open, would send it ahead. If it was found that the stem had already moved ahead so that it extended out about three inches, it would be the reducing-valve. Usually one or two sharp blows on intercepting-valve back-head, with throttle open, will loosen it. In either case, live steam would

then be admitted to low-pressure cylinder for starting.

Should the engine refuse to work compound after the three-way cock had been placed in compound position, and continue to work as a simple engine, it would indicate that the separate exhaust had not closed. This trouble can usually be traced to enginemen using engine-oil for lubricating separate exhaust-valve chamber, and can sometimes be overcome by a dose of kerosene, which should in all cases be followed up with valve-oil.

Relief Valves.—Combined pressure and vacuum relief-valves on low-pressure steam-chest and single-pressure relief-valves on low-pressure cylinder-heads should be set at 45 per cent. of the boiler-pressure, and the high-pressure cylinder-head relief-valves set at 20 pounds above boiler-pressure.

Dampers.—Dampers should be closed when drifting down long grades.

Disconnecting.—In case of break-downs, the engine can be disconnected as readily as a simple engine. Should the high-pressure side become disabled, disconnect, block, cover the ports, and open separate exhaust-valve, same as when running simple. Should low-pressure side become disabled, disconnect, block, cover the ports, and open separate exhaust-valve.

In case the engine should be without air for the operation of separate exhaust-valve, a block, preferably of wood about three inches thick, should be inserted in the valve-cylinder by the removal of the head, and the latter again replaced over the block.

DESCRIPTION OF TANDEM COMPOUND LOCOMOTIVES.*

Cylinders.—The general arrangement of cylinders and of pistons and valves is shown in Fig. 126, in which the high-pressure cylinder is forward of the low-pressure cylinder, with both pistons on the same rod. The steam-chest is common to both high- and low-pressure cylinders, being open from end to end and serving the purpose of a receiver. The valves are hollow, and permit an unrestricted flow of steam through the steam-chest. There being no receiver-pipe on these engines, the smoke-box is fitted up with steam-pipes and exhaust-pipe, exactly the same as in simple engines.

Piston Valves.—On the high-pressure cylinders the valves are arranged for internal admission, and on the low-pressure cylinders for external admission. An examination of Fig. 126 will show that this design of valves allows steam to be admitted to the same side of each piston by means of the crossed ports on the high-pressure cylinder, the valves being shown as admitting steam.

Low-pressure Cylinders.—The saddle and cylinders are shown in Fig. 127 in front view and vertical section, in which the coring is shown for steam- and exhaust-passages. The saddle has an opening cored into the steam-pipe passage, extending from front to back on each side, where there is a circular flange for connection to the short length of steam-pipe which extends from front of saddle to the high-pressure cylinder. Coring this passage through from end to end of saddle makes the cylinders interchangeable for use on either side.

* American Locomotive Co. system.

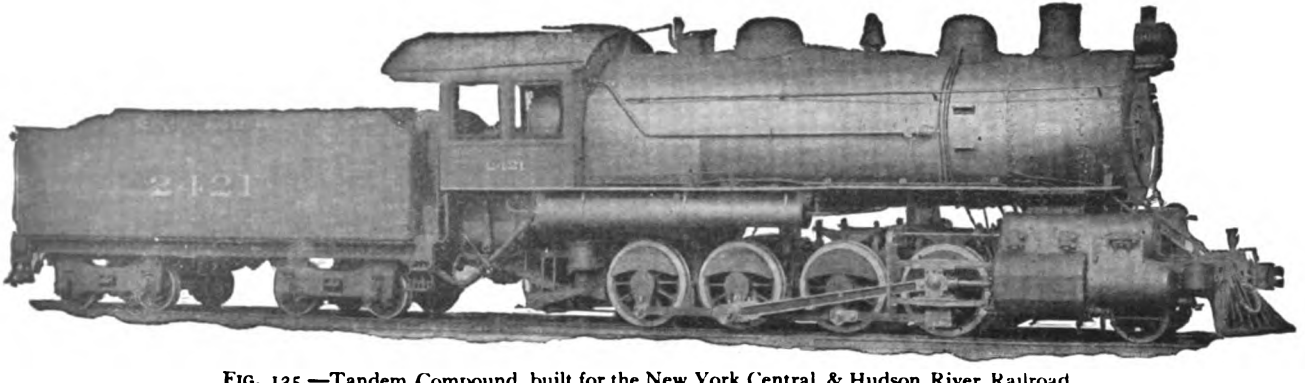

FIG. 125.—Tandem Compound, built for the New York Central & Hudson River Railroad.

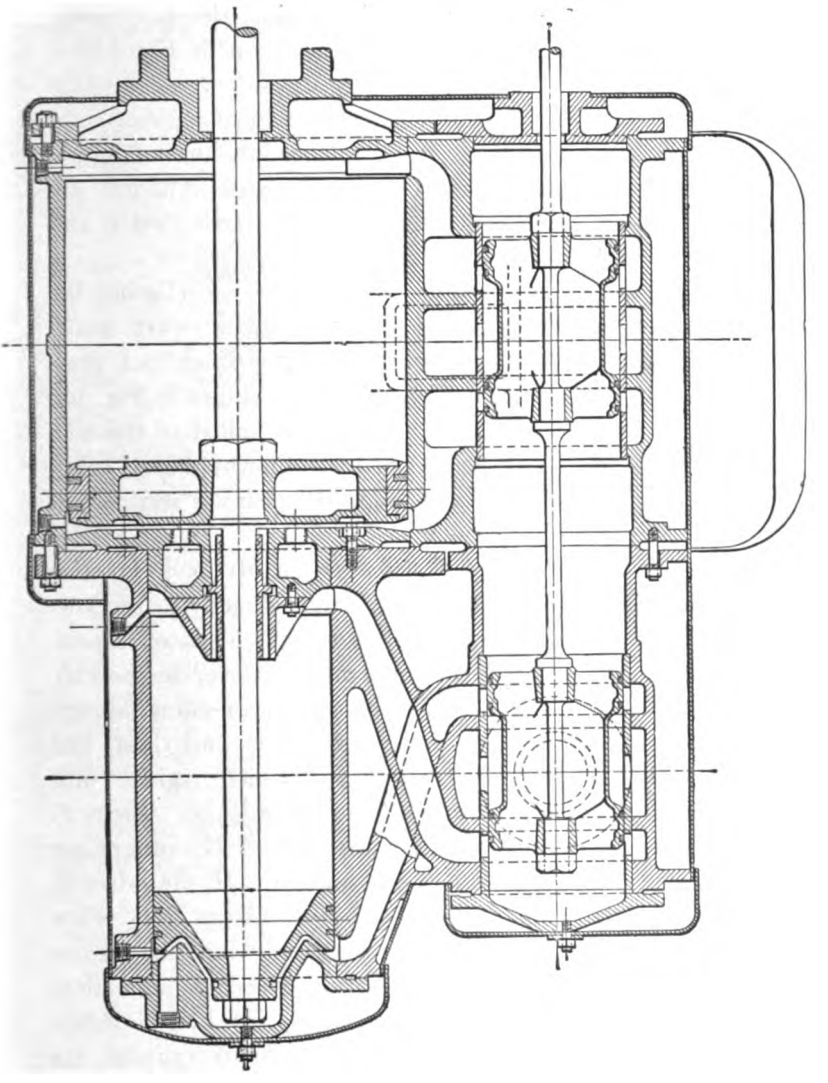

FIG. 126.

Starting-valve.—To work the engine, simple or compound, at will, the starting-valve shown in Fig. 128 is used, this valve being secured to the side of steam-chest over the high-pressure cylinder, and having direct communication with the steam-passages into that cylinder. The by-pass valves for the high-pressure cylinders are also contained in the casing of this starting-valve and are worked in connection with the latter.

By-pass Valves. — For the purpose of relieving the low-pressure cylinder of excessive pressure when working steam, or freeing the same cylinder from back pressure when drifting, the by-pass valves shown in Fig. 129 are used. These by-pass valves are bolted to the side of the steam-chest, near each end of low-pressure cylinder, and furnish communication between the steam-chest and steam-ports in cylinder.

Operation Working Simple.—To start the locomotive simple,—that is, to admit live steam directly to the low-pressure cylinders,—the starting-valve *A* is placed in position shown in Fig. 128 by means of a lever in the cab. Steam is admitted to high-pressure steam-chest through the short steam-pipe connecting saddle and chest, and passes through ports *D* and *H*, which register with the high-pressure steam-ports in steam-chest. From *D* the steam is admitted to ports *E* and *G*, and passes around the by-pass valves *B*, *B* into port *H*, the valves *B*, *B* being held up to their seats by pressure from below through port *C*, which opens directly into the steam-chamber of chest. Steam, having access to both high-pressure steam-ports, passes through both hollow piston-valves and is admitted to the low-pressure cylinder, the engine working as a simple locomotive.

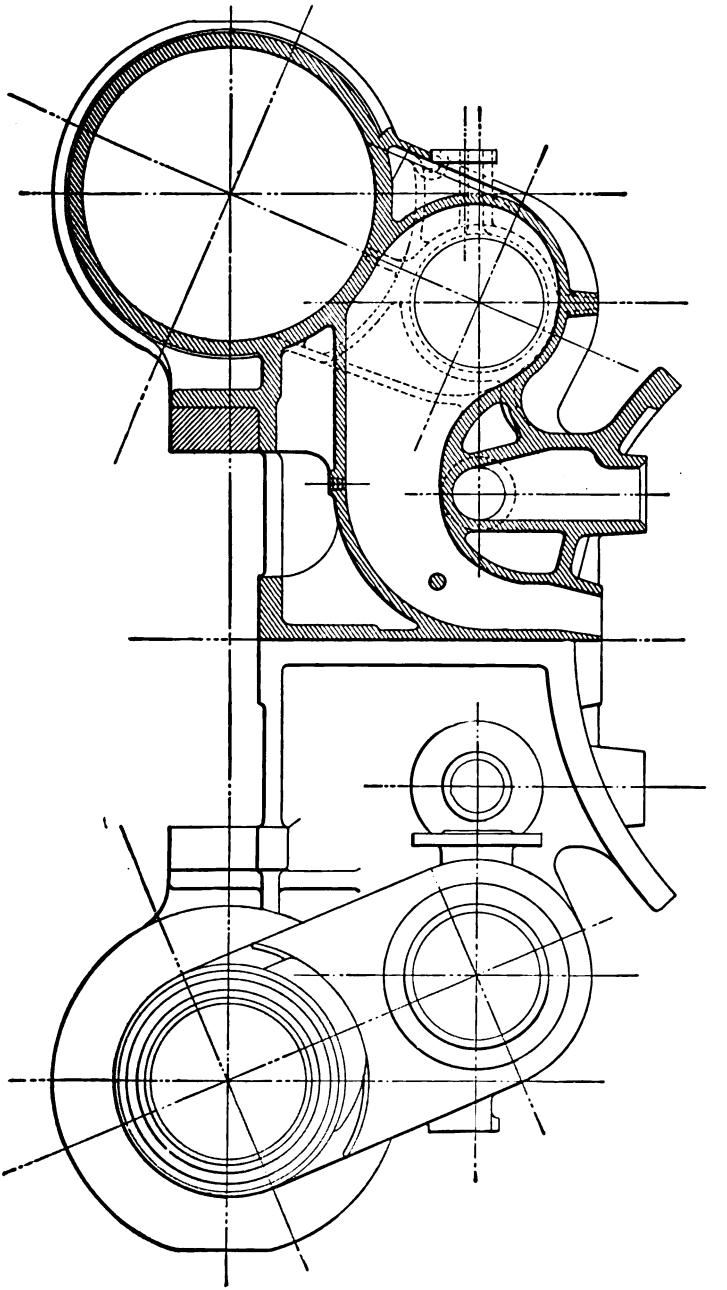

FIG. 127.—Section Through Saddle Steam-passage, Valve-chamber, and Cylinder.

Working Compound.—When working compound, the starting-valve *A* in Fig. 128 is brought to lap on port *E*, shutting off high-pressure steam from its passage into the low-pressure end of steam-chest. Under these conditions no steam can reach the low-pressure cylinder, except from the exhaust of the high-pressure cylinder.

Drifting.—When drifting, or not working steam, the by-pass valves *B*, *B* in Fig. 128, being in a vertical position, fall away from their seats by gravity and give a clear opening between the two ends of the high-pressure cylinder. The by-pass valves in Fig. 129 for the low-pressure cylinders are also in a vertical position, and are held to their seats by the steam-chest pressure when working steam. When running with closed throttle, the by-pass valves (Fig. 129) are raised from their seats by any pressure on the lower side, assisted by the spring under valve. With the valves raised from their seats there is a continuous opening between the two ends of low-pressure cylinder through cylinder steam-ports into steam-chest, providing relief from back pressure, when drifting, by equalizing the pressure in the cylinders.

Starting.—Any compound engine will do more economical and satisfactory work operated as a compound, and should therefore never be worked as a simple engine except in starting, or when likely to stall on grades, and then only long enough to overcome the resistance of the train.

Water.—Attention should be given to the quantity of water carried in the boiler, with the view of using steam as dry as possible. Water should not be any higher over crown-sheet than is necessary for safety, since high

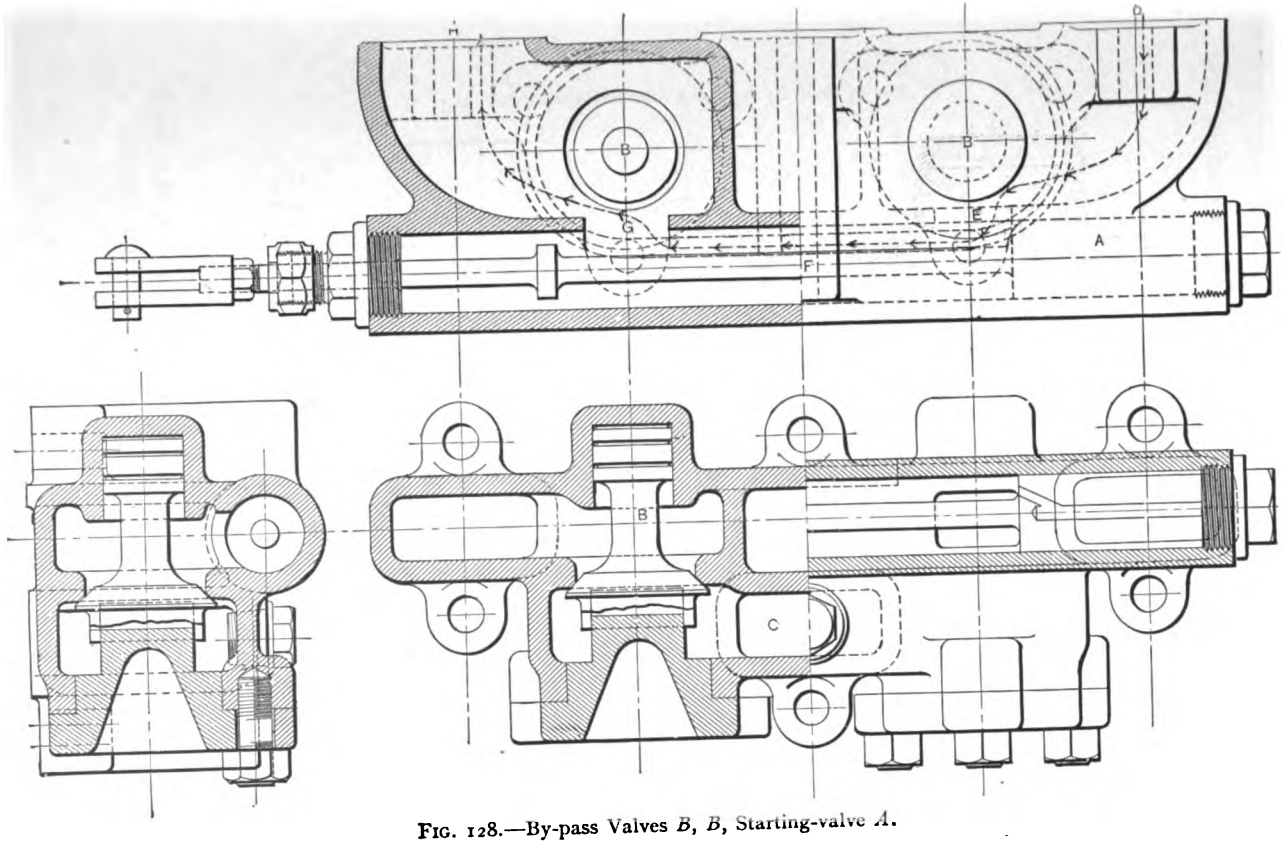

FIG. 128.—By-pass Valves *B*, *B*, Starting-valve *A*.

water is not conducive to economy in operation, and is also a menace to proper lubrication.

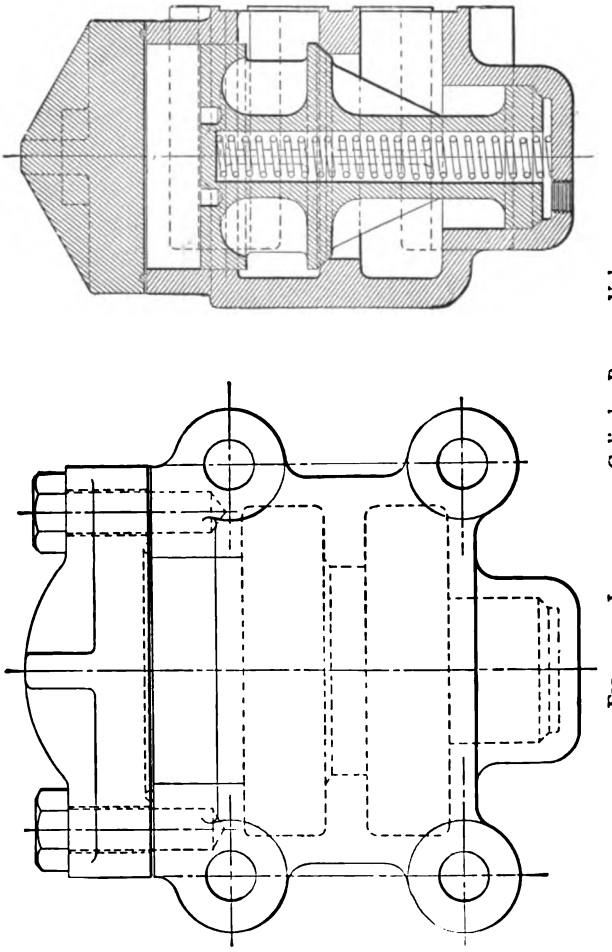

FIG. 129.—Low-pressure Cylinder By-pass Valves.

Lubrication.—When running under steam, the high-pressure cylinder should receive the greater amount of

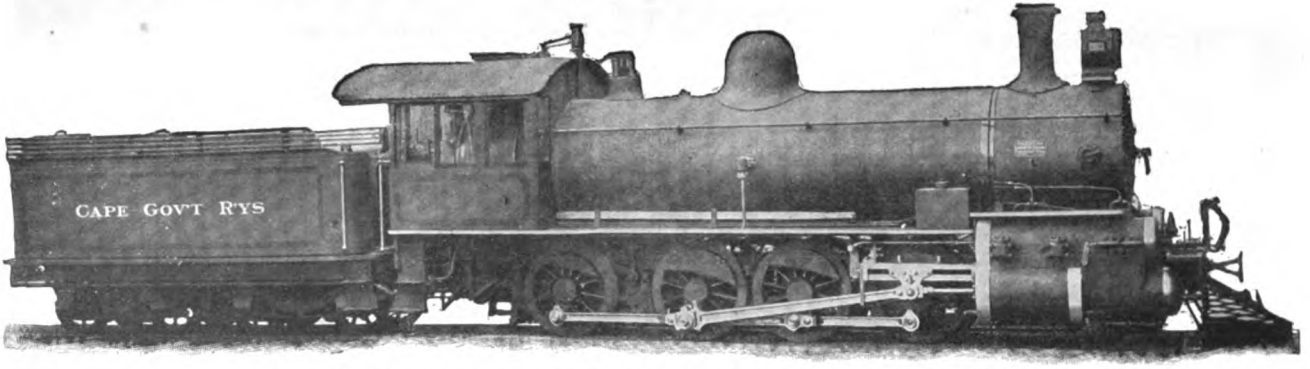

FIG. 130.—Tandem Compound, built for the Cape Government Railways, South Africa.

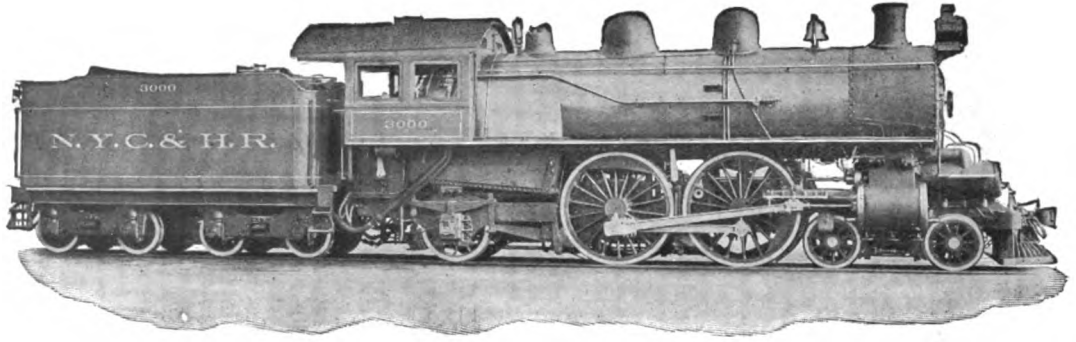

FIG. 131.—Cole Four-cylinder Balanced Compound Passenger Locomotive, built for New York Central & Hudson River Railroad.

This locomotive made the record on the testing-plant of the Pennsylvania Railroad at the Louisiana Purchase Exposition at Saint Louis.

oil. When drifting, the reverse should be the rule, the low-pressure cylinder having the more oil.

Break-downs.—When necessary to disconnect the engine on the road, the same methods may be used as with a simple engine as to removal of parts, blocking of cross-head, etc.

FOUR-CYLINDER BALANCED COMPOUND PASSENGER LOCOMOTIVE.

BUILT FOR NEW YORK CENTRAL & HUDSON RIVER RAILROAD (FIG. 131).

Gauge of track, 4 feet 8½ inches. Type, 442 C 200.

Loaded Weights.—On leading-truck, 50,000 pounds; on driving-wheels, 110,000 pounds; on trailing-truck, 40,000 pounds; total engine, 200,000 pounds; tender, 122,500 pounds.

Wheel Base.—Driving, 7 feet; total of engine, 27 feet 9 inches; total of engine and tender, 53 feet 8 inches.

Cylinders.—Diameter, 15½ and 26 inches; stroke of piston, 26 inches; valves, piston type.

Wheels.—Diameter of engine-truck wheels, 36 inches; diameter of driving-wheels outside, 79 inches; diameter of trailing-wheels, 50 inches; diameter of tender wheels, 36 inches.

Journals—Diameter and Length.—Engine-truck, 6½×12 inches; driving, 10×12 inches; trailing, 8×14 inches; tender, 5½×10 inches.

Boiler.—Type, straight; outside diameter at front end, 72¼ inches; length of fire-box inside, 96⅛ inches; width of fire-box inside, 75¼ inches; number of tubes, 390; diameter of tubes, 2 inches; length of tubes, 16 feet; working pressure per square inch, 220 pounds; heating-

surface in tubes, 3,248.1 sq. feet, arch 23.0 sq. feet; heating-surface in fire-box, 175 sq. feet; total heating-surface, 3,446.1 sq. feet; grate area, 50.23 sq. feet.

Tender Capacity.—Water, 6,000 gallons; fuel, 10 tons.

Clearance Limitations.—Height of stack above rail, 14 feet 10 inches; width, 10 feet; length over all, 62 feet 2¾ inches.

Maximum tractive power, 23,500 pounds.

FOUR-CYLINDER BALANCED COMPOUND PASSENGER LOCOMOTIVE.

BUILT FOR ERIE RAILROAD (FIG. 132).

Gauge of track, 4 feet 8½ inches. Type, 442 C 206.

Loaded Weights.—On leading-truck, 52,000 pounds; on driving-wheels, 115,000 pounds; on trailing-truck, 39,000 pounds; total engine, 206,000 pounds; tender, 163,200 pounds.

Wheel Base.—Driving, 7 feet 0 inches; total of engine, 28 feet 9 inches; total of engine and tender, 60 feet 9 inches.

Cylinders.—Diameter, 15½ and 26 inches; stroke of piston, 26 inches; valves, piston type, 14 inches.

Wheels.—Diameter of engine-truck wheels, 36 inches; diameter of driving-wheels outside, 78 inches; diameter of trailing-wheels, 50 inches; diameter of tender wheels, 33 inches.

Journals—Diameter and Length.—Engine truck, 6½×12 inches; driving, 10×12 inches; trailing, 8×14 inches; tender, 5½×10 inches.

Boiler.—Type, extended wagon-top; outside diameter at front end, 70¾ inches; length of fire-box inside, 108⅛ inches; width of fire-box inside, 75¼ inches; number of

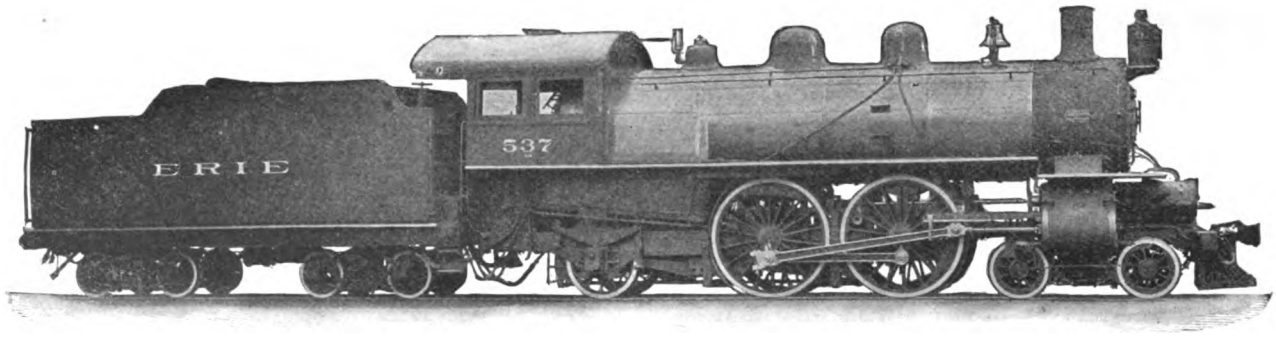

FIG. 132.—Cole Four-cylinder Balanced Compound Passenger Locomotive, built for Erie Railroad.

This locomotive is hauling trains of 373 tons (not including its own weight) from Jersey City to Port Jervis, 88 miles, at 40 miles per hour, making three stops. In this distance there is a heavy grade 14.3 miles long, 60 feet per mile at the heaviest point, and another 9 miles long, 44 feet per mile at the heaviest point.

tubes, 388; diameter of tubes, 2 inches; length of tubes, 17 feet; working pressure per square inch, 220 pounds; heating-surface in tubes, 3,433.55 sq. feet; heating-surface in fire-box, 188.47 sq. feet; total heating-surface, 3,622.02 sq. feet; grate area, 56.3 sq. feet.

Tender Capacity.—Water, 8,500 gallons; fuel, 16 tons.

Clearance Limitations.—Height of stack above rail, 15 feet 2¼ inches; width, 10 feet 1½ inches; length over all, 70 feet 8¾ inches.

Maximum tractive power, 23,200 pounds.

FOUR-CYLINDER BALANCED COMPOUND PASSENGER LOCOMOTIVE.

BUILT FOR PENNSYLVANIA RAILROAD AND PENNSYLVANIA LINES WEST OF PITTSBURG (FIG. 133).

Gauge of track, 4 feet 9 inches. Type, 442 C 201.

Loaded Weights.—On leading-truck, 52,500 pounds; on driving-wheels, 117,200 pounds; on trailing-truck, 30,800 pounds; total engine, 200,500 pounds; tender, 139,700 pounds.

Wheel Base.—Driving, 7 feet 5 inches; total of engine, 31 feet 11 inches; total of engine and tender, 64 feet 1 inch.

Cylinders.—Diameter, 16 and 27 inches; stroke of piston, 26 inches; valves, piston type, 14 inches.

Wheels.—Diameter of engine-truck wheels, 36 inches; diameter of driving-wheels outside, 80 inches; diameter of trailing-wheels, 50 inches; diameter of tender wheels, 36 inches.

Journals—Diameter and Length.—Engine truck, 6½×12 inches; driving, 10½×12 inches; trailing, 7×11¾ inches; tender, 5½×10 inches.

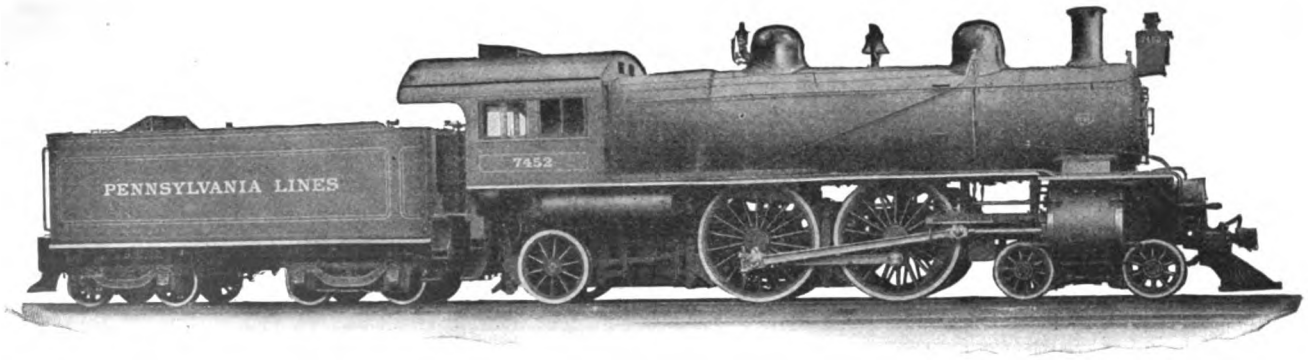

FIG. 133.—Cole Four-cylinder Balanced Compound Passenger Locomotive, built for Pennsylvania Railroad and Pennsylvania Lines west of Pittsburg.

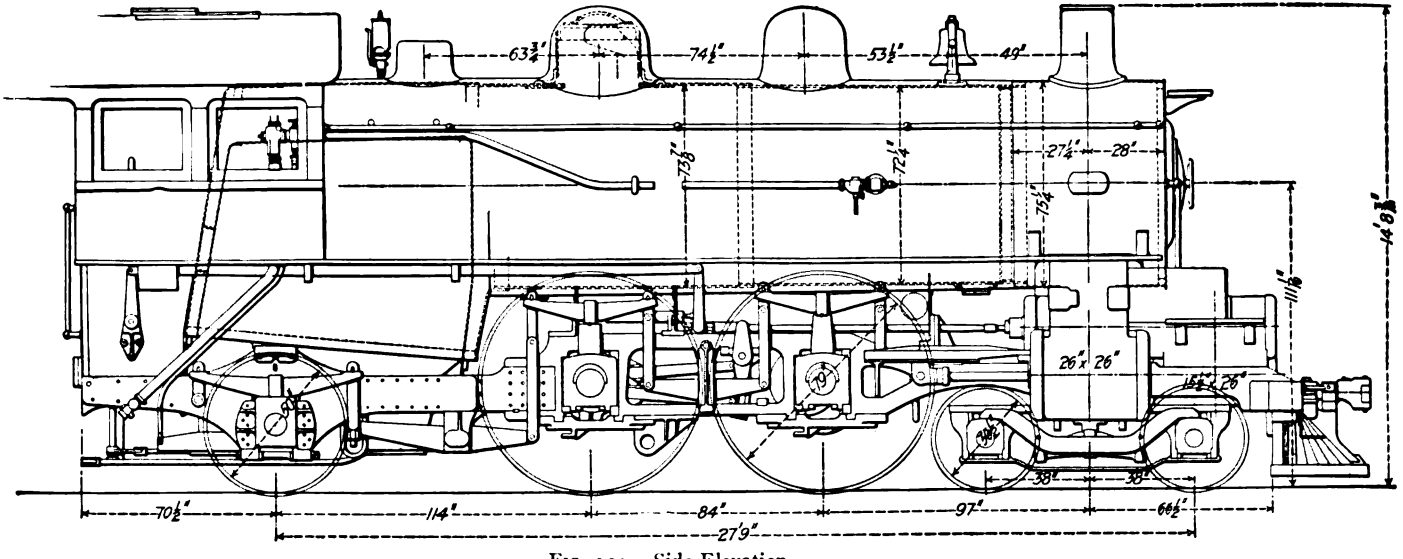

FIG. 134.—Side Elevation.

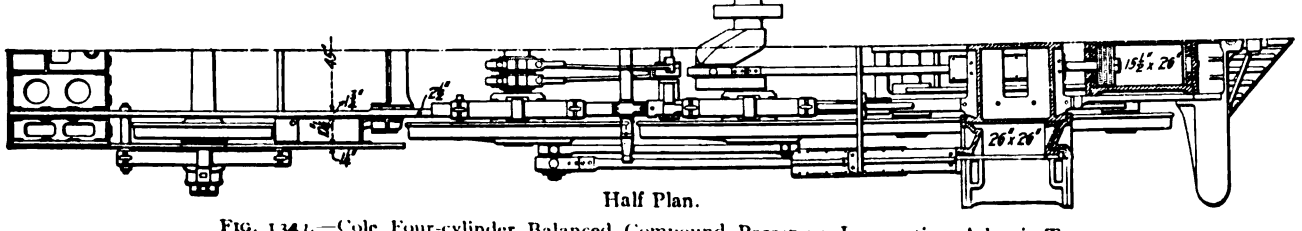

Half Plan.

FIG. 134.—Cole Four-cylinder Balanced Compound Passenger Locomotive, Atlantic Type.

Boiler.—Type, extended wagon-top; outside diameter at front end, 68⅜ inches; length of fire-box inside, 111 inches; width of fire-box inside, 72 inches; number of tubes, 315; diameter of tubes, 2 inches; length of tubes, 16 feet 4 inches; working pressure per square inch, 205 pounds; heating-surface in tubes, 2,680.17 square feet; heating-surface in fire-box, 181.40 sq. feet; total heating-surface, 2,861.57 sq. feet; grate area, 55.05 sq. feet.

Tender Capacity.—Water, 7,000 gallons; fuel, 10 tons.

Clearance Limitations.—Height of stack above rail, 14 feet 11½ inches; width, 10 feet 1½ inches; length over all, 70 feet 11⅛ inches.

Maximum tractive power, 22,600 pounds.

COLE FOUR-CYLINDER BALANCED COMPOUNDS.

The following description applies to the New York Central locomotive, and with slight modifications to those of the Erie and Pennsylvania Railroads:

The relative positions of the high- and low-pressure cylinders may be seen in Figs. 134 and 138. The smoke-box steam-pipes deliver steam into passages in the low-pressure saddle. It is brought to the forward part of the valve-chamber to the high-pressure piston valves through encased elbow-pipes, one of which is seen in elevation in Fig. 134. The high-pressure guides, Fig. 134, are located under and attached to the low-pressure saddle, whereas the low-pressure guides are in the usual location outside of the frames. The cranks of the driving-axles are 180 degrees apart, which places the reciprocating parts of the high- and low-pressure engines in

opposing motion, permitting perfect balance. In order to equalize the weights of the pistons, those of the high-pressure cylinders are solid, and those of the low-pressure cylinders are dished and made as light as possible. A single-valve motion of the Stephenson type operates a single-valve stem on each side of the engine. Each valve-stem carries two piston-valves, one for a high- and the other for a low-pressure cylinder, as illustrated and explained later.

The back end, I, Fig. 134*b*, and the two sections, II and III, resemble ordinary construction of two-cylinder locomotives; but the half-front elevation and half section, IV, disclose a number of departures. The high-pressure piston-rod, cross-head, and guides are shown in position under the low-pressure saddle. The method of introducing the elbow-pipe between the steam-pipe boss of the low-pressure saddle and the forward part of the piston-valve chamber is indicated. V shows one of the frames in plan and elevation; the main portion between the low-pressure cylinder and rear pedestal is of the bar type and very heavy; the forward extension in front of the low-pressure cylinder seat is slabbed, and to it are bolted the high-pressure cylinders; that portion of the frame back of the rear pedestal is of double-plate form, the additional plate, parallel to the main-frame plate, being introduced in order to give proper support to the pedestals and springs of the outside journal-boxes of the trailing-wheels.

The high-pressure cylinders and the high-pressure section of the piston-valve chambers are all in one casting, Fig. 135. On the top of the valve-chamber is the boss in which the forward end of the elbow-pipe (previously

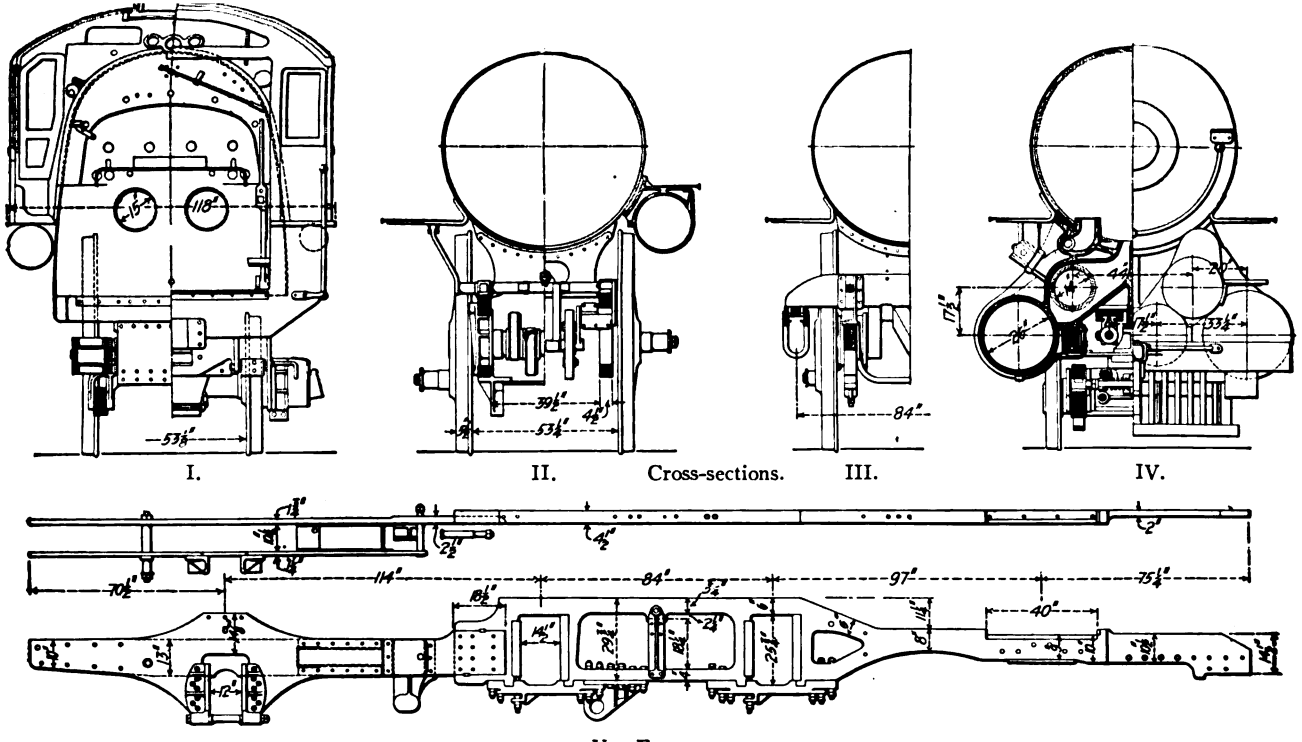

FIG. 134*b*.—Cole Four-cylinder Balanced Compound Passenger Locomotive, Atlantic Type.

mentioned) is seated. The sides of the cylinder casting are faced off to the exact distance between the front plate extensions of the frames; the valve-chambers are in exact line with the valve-chambers of the low-pressure cylinders, intermediate thimble-castings and packing-glands being inserted between the two to form a con-

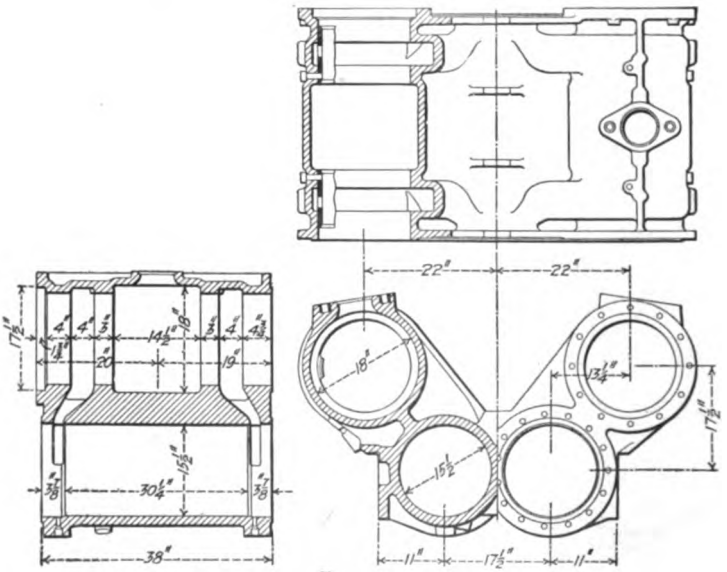

FIG. 135.

tinuous valve-chamber common to both high- and low-pressure cylinders, thus providing for expansion. In this engraving the locations of two of the valve-chamber bushings are indicated in partial section in the upper view. They are omitted in the lower left-hand view.

Fig. 136 shows the low-pressure cylinders, which are cast separately and bolted together; in this case the inside of the cylinders are faced off to proper dimen-

sion to embrace the outer faces of the bar-frames. The low-pressure piston valve-chamber is in direct line between the cylinder and the exhaust base. Here again is seen the seat for the back ends of the elbow-pipes which convey the steam from the low-pressure saddle to the forward end of the valve-chamber. In this engraving the valve-chamber bushings are omitted. They are shown in Fig. 138 on page 265. This view illus-

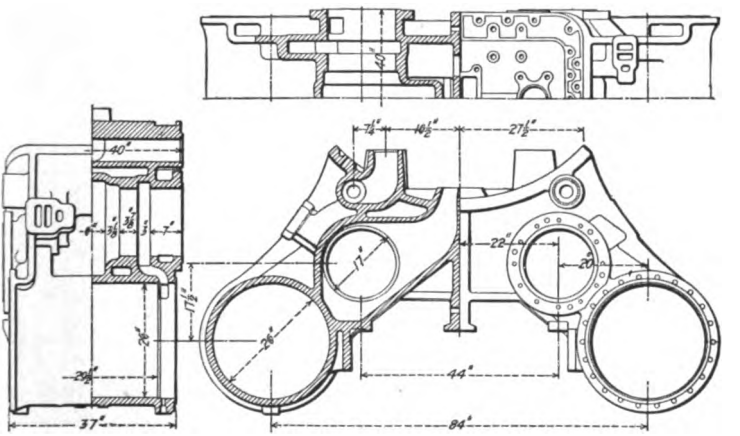

FIG. 136.

trates the short, direct-exhaust passage from the low-pressure cylinders to the exhaust nozzle. This view shows the starting-valve chambers.

Fig. 137, the crank-axle, shows that under the existing conditions it is possible to make this part exceedingly strong. The bearings are 10 inches throughout; the driving-box journal and the journal for the back end of high-pressure connecting-rod are connected by a circular disc 4½ inches thick, a very strong form of construction.

Inasmuch as the cranks on this axle are set 90 degrees from one another, it is possible to introduce the exceedingly strong 10×12½-inch rectangular section connecting the two crank-pins. The whole forms an exceedingly strong and durable arrangement, constructed in accordance with the best European practice, which is likely

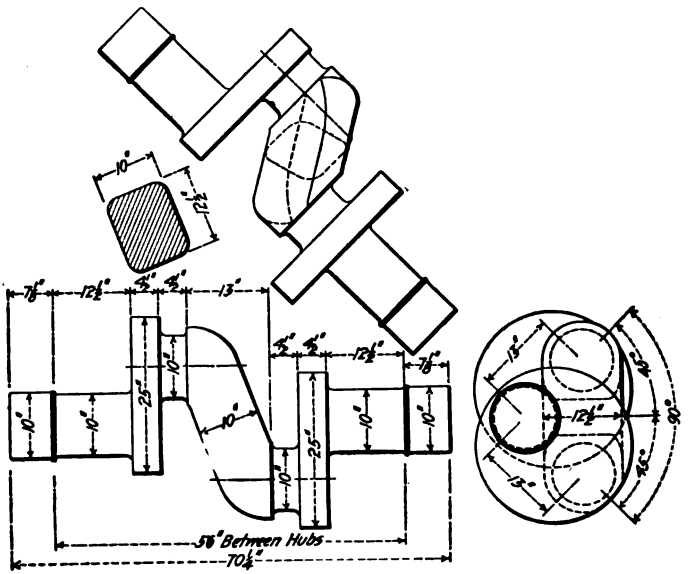

FIG. 137.

to both wear and stand up well in service. In the end view, the circular form of the crank-discs is shown. A cross-section of the central portion of the axle indicates its proportions between the crank-pins.

The high- and low-pressure cylinders are shown in Fig. 138 as they would appear in section revolved into the same plane. The high-pressure valve is arranged for central admission, and the low-pressure for central

exhaust, both valves being hollow. A thimble casting or ground joint-ring and a gland connect the two parts

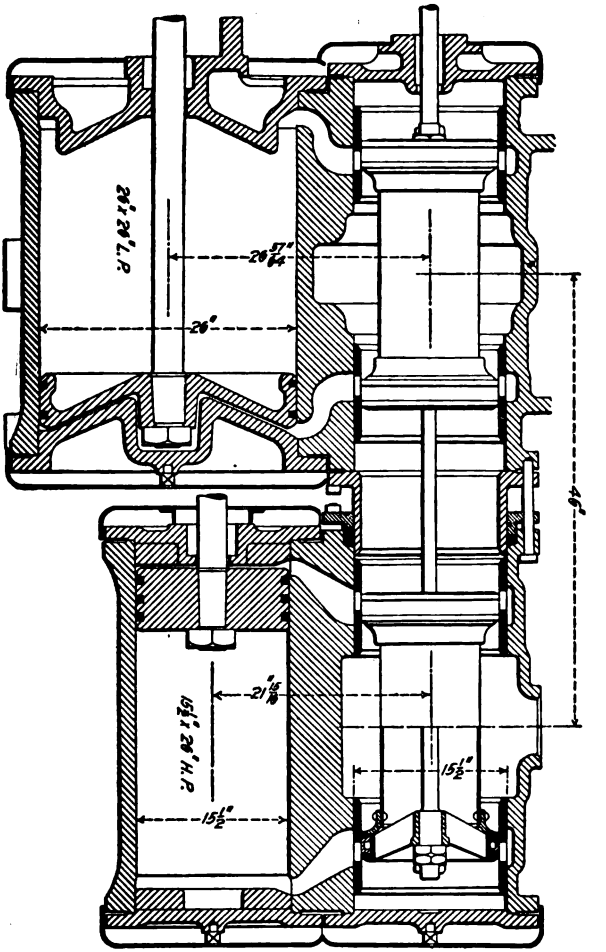

FIG. 138.

of the continuous valve-chamber. The valves are exactly alike, with bodies of wrought-iron pipe, spiders, and

flanges of cast steel. The bull-rings and packing-rings, of which each valve has four, are of cast iron. These two valves weigh little more than one ordinary valve.

ADVANTAGES OF FOUR-CYLINDER BALANCED COMPOUNDS

The advantages of the four-cylinder balanced compound are:

1. The approximately perfect balance of the reciprocating parts, combined with the perfect balance of the revolving weights, results in a locomotive perfectly balanced in all respects.

2. The permissible increase of weight on the driving-wheels, on account of the complete elimination of the hammer-blow. In the New York Central locomotive, as compared with a similar design from which it was modified, it was decided to increase the weight per driving-axle from 47,500 pounds to 55,000 pounds.

3. An increase in sustained horse-power at high speeds without modification of the boiler. The original simple engine developed 1400 to 1500 indicated horse-power; the four-cylinder balanced compound has developed from 1900 to 2000 indicated horse-power, actually realizing 1688 at 67 miles per hour and 1980 at 75 miles per hour in service.

4. Economy of fuel and water.

5. The subdivision of power between four cylinders and between two axles. Reduction of bending stress on the crank-axle, due to piston thrust (as compared to the main axle of the simple engine), because of this division of power. The advantages of light moving-

parts, which render them easily handled, and which will minimize wear and repairs.

6. Simplicity of design,—one set of valve-gear with comparatively few parts.

APPLICATION TO VARIOUS TYPES OF LOCOMOTIVES.

To apply the four-cylinder balanced principle to Atlantic, Pacific, Ten-Wheel, Twelve-Wheel types requires either the high-pressure cylinders to be located ahead of the low, with only a slight increase in wheel-base or length of boiler, or an increase of 30 inches to 36 inches in the normal length between the front driver and the cylinder centre. This also involves increasing the boiler and flues a like amount. When applied to a locomotive having a two-wheeled leading-truck, three different methods are available: (*a*) Locating the high-pressure cylinders ahead and increasing the distance between front driver and centre of cylinders about 24 inches; (*b*) Inclining the high-pressure cylinders to clear the front driving-axle; (*c*) Looping the high-pressure main rods so as to encircle the front driving-axle.

These arrangements are named in the order of their practical availability. In considering the advantages of balanced locomotives, it is well to bear in mind that their use is by no means confined to high-speed passenger-service. The destructive effect on the track of excess weights in driving-wheels is a matter of revolutions, and not necessarily of speed. The dynamic effect of a medium-sized wheel, running at a high speed in revolutions, while making a moderate number of miles per hour, is just as great as a large wheel at the same num-

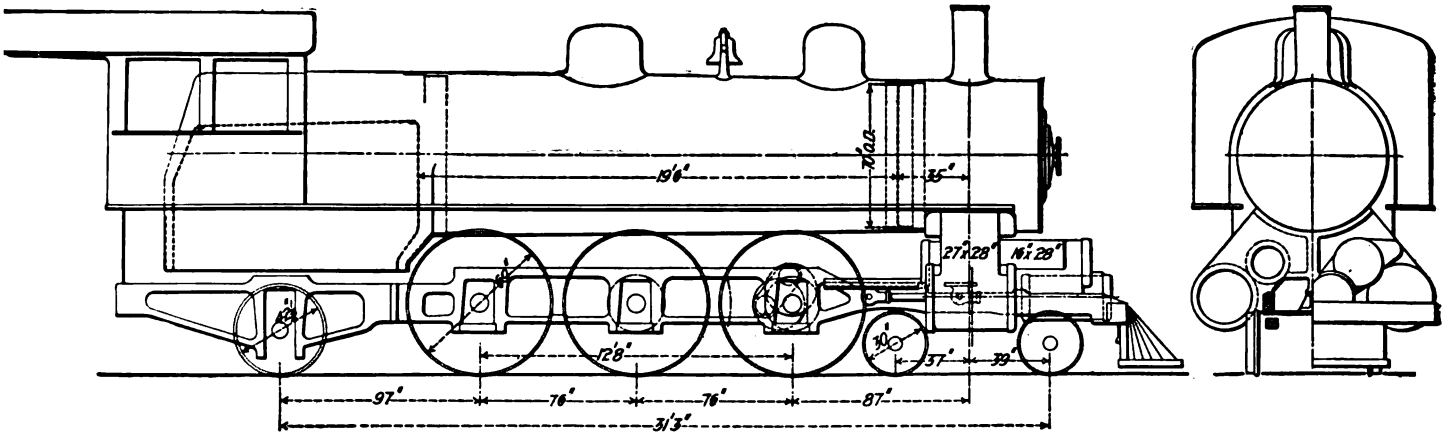

FIG. 139.—Design of Pacific Type, Balanced Compound.

The crank-axle leads. The high-pressure cylinders are in advance of the low without increasing length of boiler or flues.

ber of revolutions making a much higher speed in miles per hour. Furthermore, the necessity for subdivision of

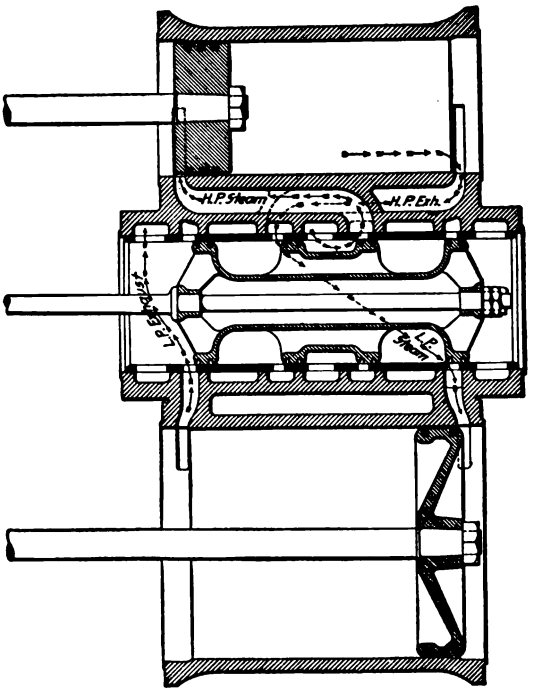

FIG. 140.—Single Valve for H.P. and L.P. Cylinders.

power in a very heavy fast freight-locomotive is more urgent.

The outline designs on the following pages show some of the applications of the four-cylinder balanced compound principle to different types of locomotives, illustrating its adaptability to a variety of service.

SINGLE VALVE FOR HIGH- AND LOW-PRESSURE CYLINDERS.

This arangement provides for cylinders in the same transverse plane, whether the high-pressure cylinders are inclined or horizontal. The same valve may be used to cover both cases. One valve controls a high- and a low-pressure cylinder. The valve, arrangement of the ports, and the course of the steam are shown. This valve is hollow, and therefore light, and is arranged with the minimum possible number of packing-rings. The ports for the high-pressure cylinder are crossed, an arrangement used with marked success on tandem compounds.

Fig. 140 shows the cylinders revolved into the same plane as the valve-chamber. The arrangement of the cylinders on the locomotive is shown in the small sectional and end view on page 275, Fig. 145.

In order not to make the connecting-rod too short when cylinders are placed as in Fig. 145 and the inside cranks on the first driving-axle, the boiler must be extended somewhat over the usual length. In this particular case the H.P and L.P. connec ting-ods are not connected to the same pair of driving-wheels. The low-pressure rods are connected to the rear pair of drivers, the high-pressure to the front pair. In order to have the connecting-rods of the same length the low-pressure piston-rods would have to be made longer, carrying the guide-bars back farther from the end of the cylinder.

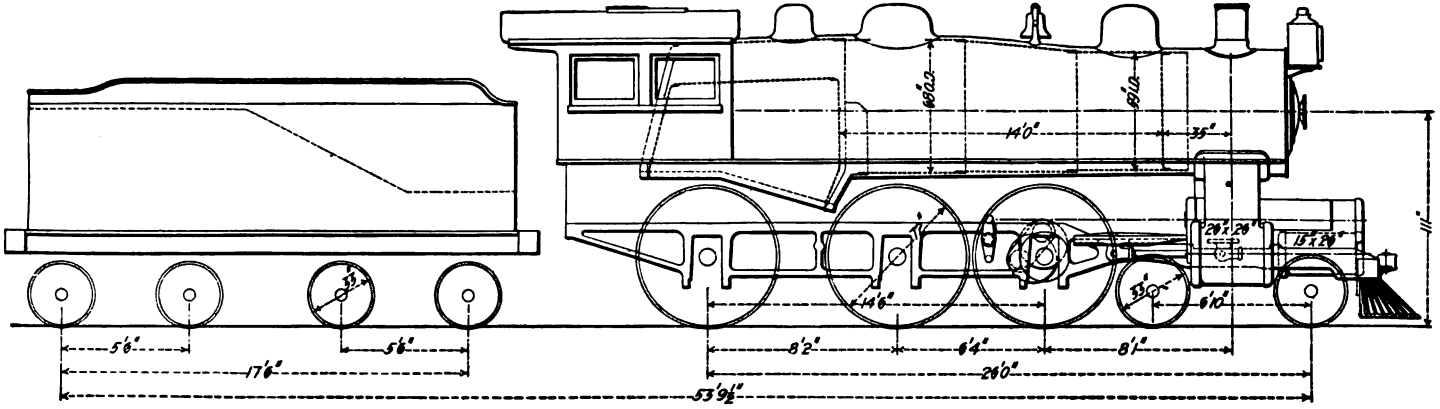

FIG. 141.—Design of Ten-wheel Type, Balanced Compound.

The crank-axle leads, as in the case of the Pacific Type on page 268.

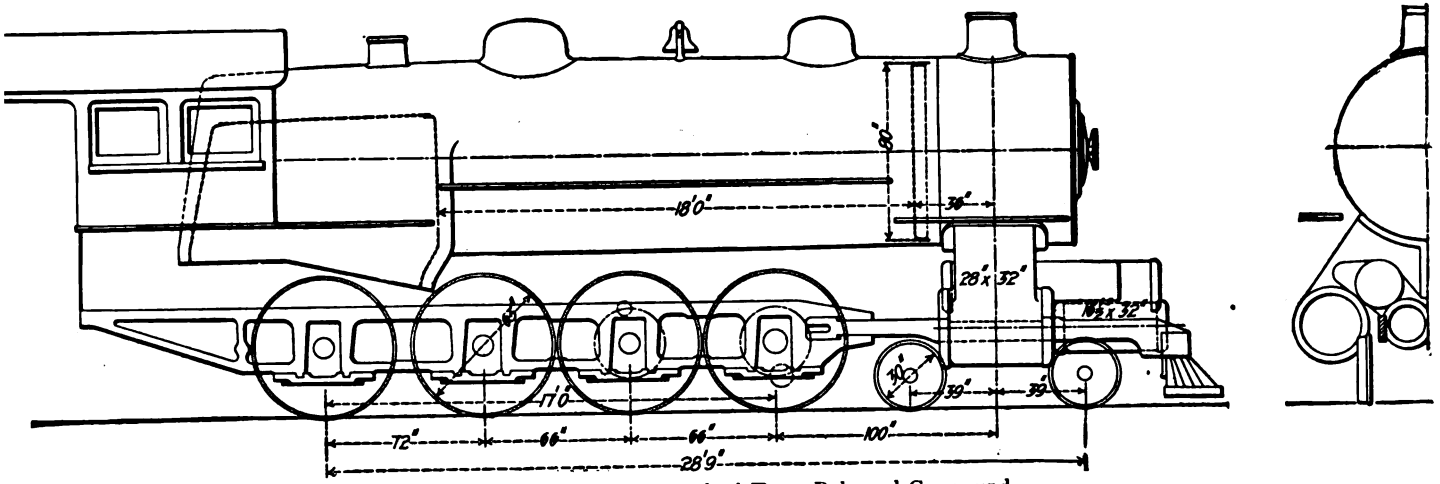

FIG. 142.—Design of Twelve-wheel Type, Balanced Compound.
The crank-axle leads, and the high-pressure cylinders are in advance of the low-pressure.

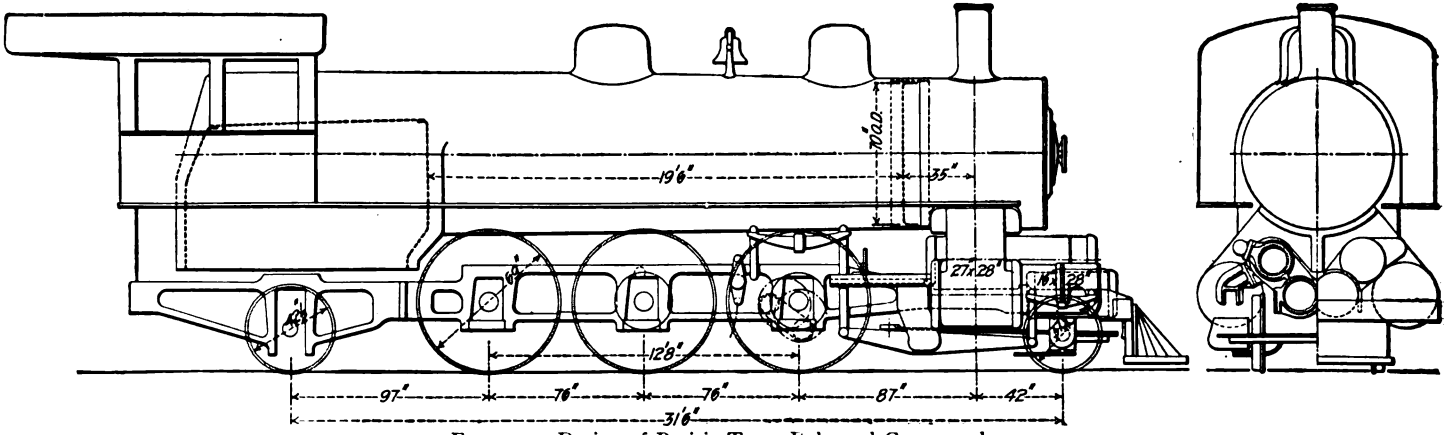

FIG. 14.—Design of Prairie Type, Balanced Compound.

The leading-truck with outside bearings was a necessity in this case, in order to avoid interference with the high-pressure cylinders. The distance from the forward driving-wheels to the centre of the cylinders is increased about 23 inches, more than the normal distance for single-expansion cylinders.

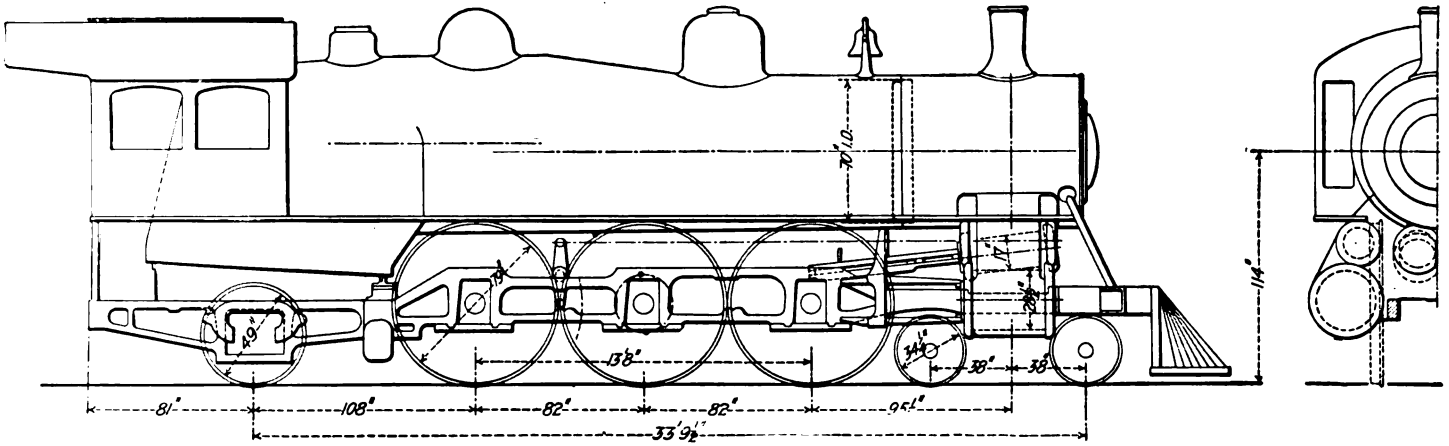

FIG. 144.—Design of Pacific Type, Balanced Compound.

With high- and low-pressure cylinders in the same transverse plane, the inside or the high-pressure cylinders being inclined so that the main rods and guides are over the forward driving-axle. The second driving-axle is the crank-axle, and the main rods for all four cylinders connect to the second pair of driving-wheels. The eccentrics are on the rear driving-axle, with an ordinary reversing rocker between the main and rear pairs of driving-wheels, connecting to the valve by means of a long valve-stem.

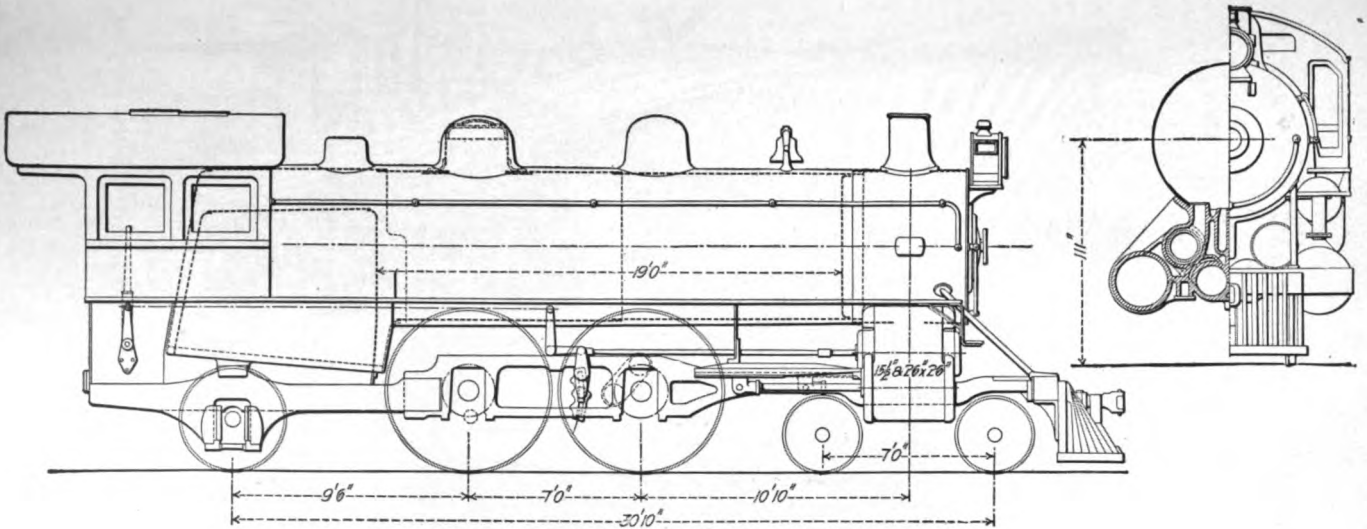

FIG. 145.—Design of Atlantic Type, Balanced Compound.

With high- and low-pressure cylinders in the same transverse and horizontal plane. This design is suggested for those who may prefer this cylinder arrangement to those illustrated on previous pages. It is the cylinder arrangement, preferred and advocated by Herr von Borries; but the outside main rods connect with the rear driving-wheels, differing from the von Borries design.

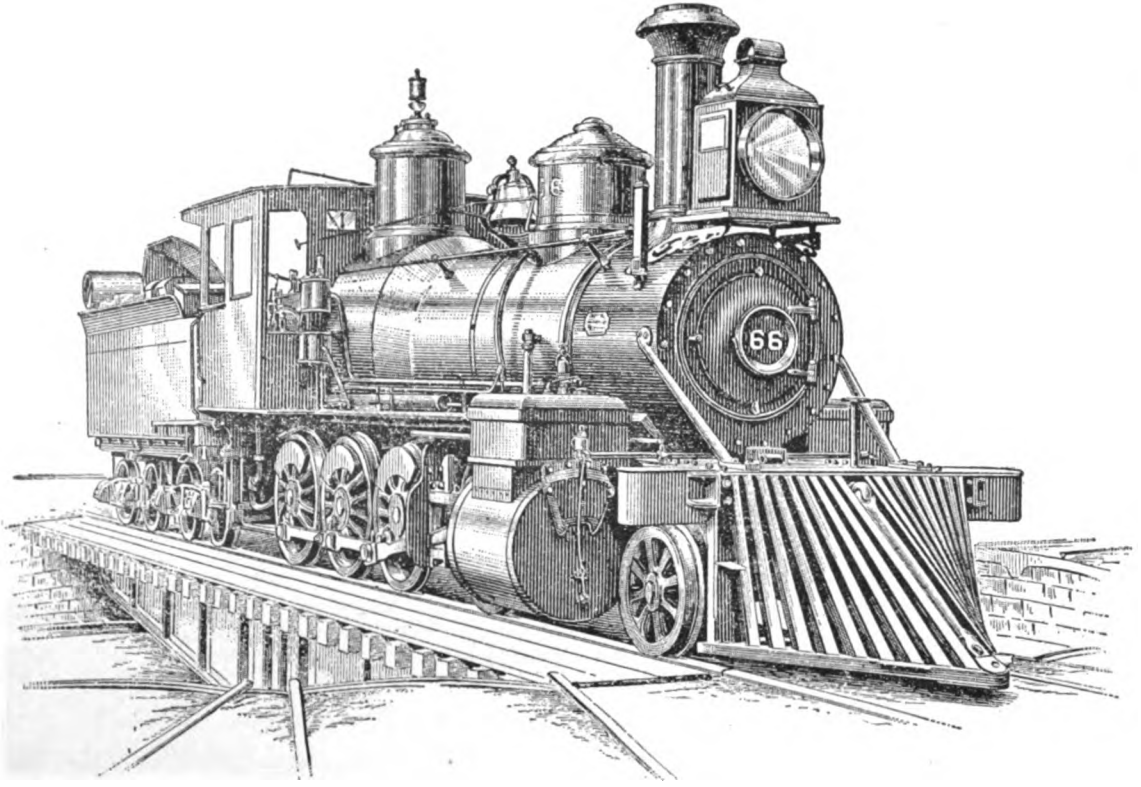

FIG. 146.—Compound Locomotive, Mexican Central Railway. Designed by F. W. Johnstone, Superintendent Motive Power.

JOHNSTONE COMPOUND LOCOMOTIVE, NO. 66.
MEXICAN CENTRAL R. R.

(From the *Railroad Gazette*, May 22, 1891.)

The Design.—It will be seen that the high-pressure cylinder, which is 14 inches diameter by 24-inch stroke, is placed within the low-pressure cylinder, which is 30¾

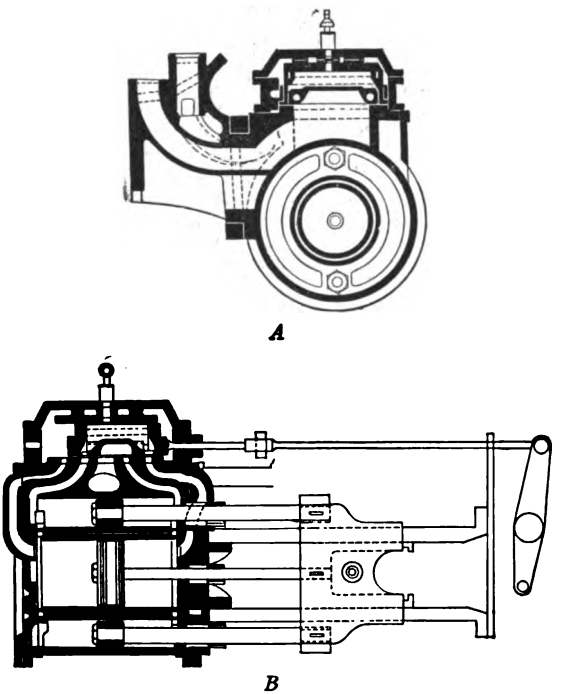

FIG. 147.—*A*, Cross-section through Valve, Steam-chest, Cylinder and Steam-passages; *B*, Section through Cylinders, showing Piston-heads, Rods, and Cross-head.

of 24¼ inches diameter after deducting the area of the inches diameter by 24-inch stroke, or equal to a cylinder

high-pressure cylinder and the sleeve surrounding it. The ratio of the cylinders is three to one. The low-pressure piston is provided with two rods and the high-pressure with one. The three rods are secured to the same cross-head, both pistons acting in the same direction.

The valve, which is a very important feature of this design, distributes steam to both high- and low-pressure cylinders, requiring but one valve-stem, which is actuated by the link motion as formerly used on the locomotive, no change having been made in it. The valve is made in two sections, the outer portion distributing steam to the high-pressure cylinder and the inner section to the low-pressure cylinder. The inner section is carried by the outer and has 1 inch less travel, the outer travelling 6 inches, the inner travelling 5 inches. The object of this is to retard the point of cut-off to the low-pressure cylinder, and also to reduce the compression on the front of the high-pressure piston. By reference to the indicator cards it will be seen that this has been accomplished in a very satisfactory manner. For instance, when the high-pressure admission is cut off at 9 inches, the low-pressure valve continues open to the admission of steam for 17 inches. On the other hand, the compression on the high-pressure piston, which would begin at 9 inches piston travel, were both sections of valve made to move together with the same point of cut-off, does not take place until 17 inches in the high-pressure piston and 19 inches in the low-pressure. With 14 inches cut-off in the high-pressure cylinder, there is 20 inches cut-off in the low-pressure cylinder, compression beginning at 20 inches in the high pressure and 22 inches in the low pressure.

A simple arrangement of starting-valves enables the

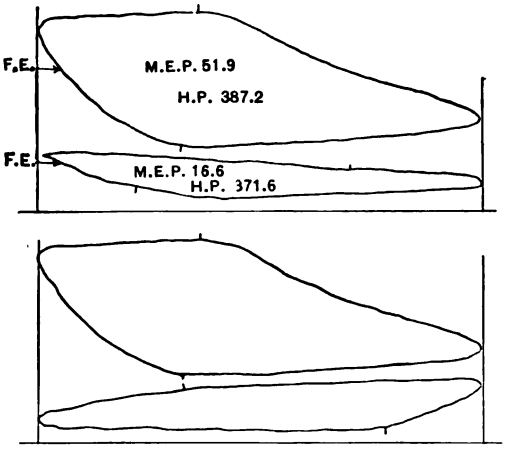

Cut-off: High pressure, 9; low pressure, 16¼. Compression begins High pressure, 16¼; low pressure, 19. Boiler pressure, 150. Revolutions, 200.

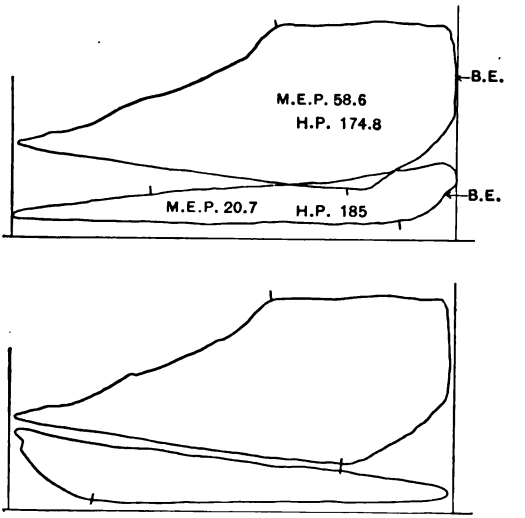

Cut-off: High pressure, 10; low pressure, 17½. Compression begins: High pressure, 17½; low pressure, 20. Boiler pressure, 150. Revolutions, 80.

FIG. 148.—INDICATOR DIAGRAMS. MEXICAN CENTRAL ENGINE No. 66; JOHNSTONE'S COMPOUND.

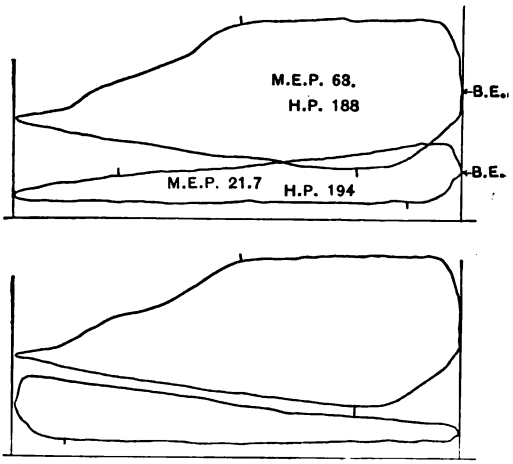

Cut-off: High pressure, 12; low pressure, 18½. Compression begins: High pressure 18½; low pressure, 21¼. Boiler pressure, 140. Revolutions, 80.

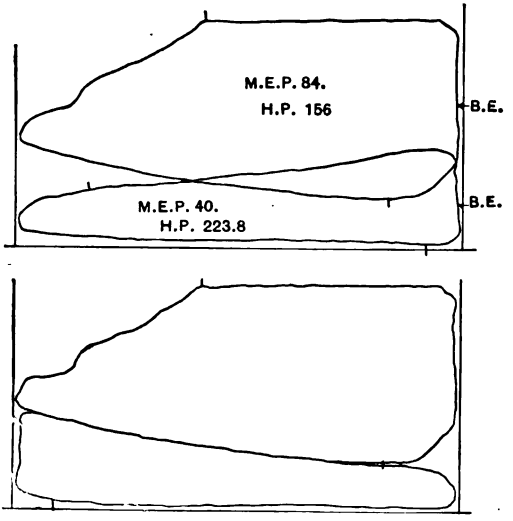

Cut-off: High pressure, 14; low pressure, 20. Compression begins: High pressure, 20; low pressure, 22. Boiler pressure, 150. Revolutions, 50.

FIG. 149.—INDICATOR DIAGRAMS. MEXICAN CENTRAL ENGINE No. 66; JOHNSTONE'S COMPOUND.

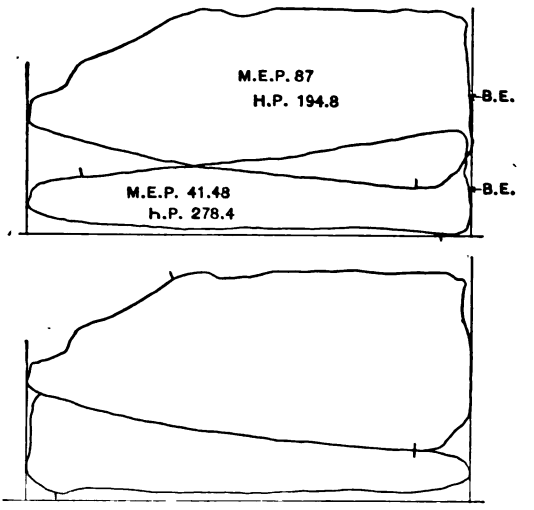

Cut-off: High pressure, 16; low pressure, 21. Compression begins: High pressure, 21; low pressure, 22½. Boiler pressure, 150. Revolutions, 60.

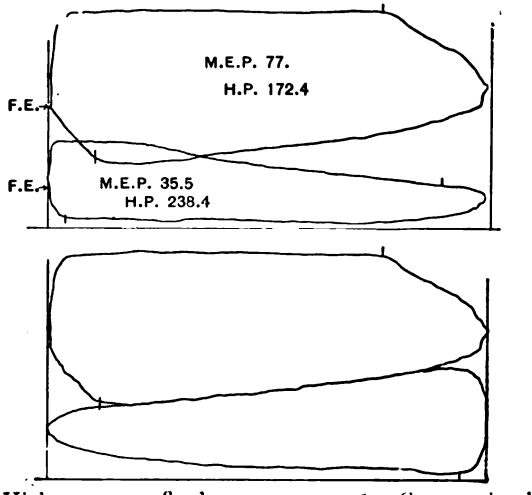

Cut-off: High pressure, 18; low pressure, 21½. Compression begins: High pressure, 21½; low pressure, 23. Boiler pressure, 150. Revolutions, 60.

FIG. 150.—INDICATOR DIAGRAMS. MEXICAN CENTRAL ENGINE NO. 66; JOHNSTONE'S COMPOUND.

engineman to throw the engine into high pressure, steam being admitted through a reduced opening into the low-pressure cylinders. When this is done the high-pressure piston is put into equilibrium, but the two low-pressure pistons act with a force equal to two 24½-inch pistons; therefore the engine has much greater starting power than any high-pressure locomotive of ordinary build.

LOCOMOTIVE DIMENSIONS.

	No. 66 Compound.
Cylinder, size	14 in.×24 in.
Ratio low pressure to high pressure	3 to 1
Driving-wheel diameter	48 in.
Number of drivers	8
Weight on drivers	100,000 lbs.
Weight of engine and tank	180,000 lbs.
Diameter of shell of boiler	52 in.
Number of tubes	200
Size and length of tubes	2 in.×11 ft. 7 in.
Grate-area in square feet	21.5
Heating-surface of fire-box in square feet	148
Heating-surface of tubes in square feet	1200
Total heating-surface	1348
Working boiler pressure	150
Water capacity of boiler in per cent	100
Steam-space of boiler in per cent with water 6 in. above crown-sheet	100
Grate-areas of boilers in per cent	100

RUNS BETWEEN SAN JUAN, DEL RIO, AND MEXICO; BITUMINOUS COAL FROM SAN ANTONIO.

	Engine 66.	
Date of trips	Nov. 15, 1890	Nov. 25, 1890
Total hours on trip	13.20	13.40
Actual running time	10.00	10.40
Number of cars in train	14	15
Total weight of train, including engine and tender, in tons of 2000 lbs.	494	489
Total units of work performed	1,613	1,598
Pounds of coal consumed	13,300	13,200
Pounds of water used	74,000	73,000
Units of work per ton of coal	242.6	242.1
Units of work per ton of water	43.6	43.8

Coal cost $11 per ton.

CHAPTER XIII.

FOREIGN-BUILT COMPOUND LOCOMOTIVES.

ARTICULATED FOUR-CYLINDER COMPOUND LOCOMOTIVES.

THE demand for heavy locomotives of great hauling capacity has developed various types. The increase in size is controlled by gauge and clearances. Wheel-base per running foot per axle is limited. The only way to increase total weight and power is by lengthening the rigid wheel-base and the total wheel-base. In order to overcome the limitations many different designs have been produced, and the one presented here is called the Mallet Articulated Compound Locomotive, using four cylinders.

This type of engine permits compounding under most favorable and advantageous conditions. The high-pressure cylinders can be applied to one truck and the low-pressure cylinders to the other truck. Any desired ratio can be adopted. The work can be divided equally between the two sets of cylinders. This style of engine, as designed by M. Mallet, is shown in Fig. 151. It is in use on the railroads of Saxony. This engine, as shown, is carried wholly on driving-wheels, each set of four being placed in separate trucks. The four truck-frames are connected by an oblique coupling. The boiler

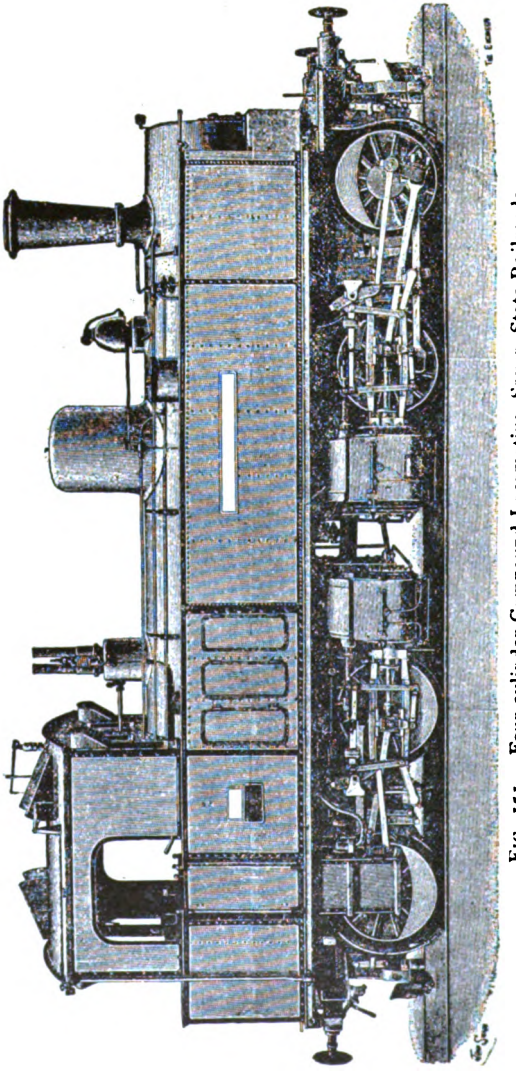

FIG. 151.—Four-cylinder Compound Locomotive, Saxon State Railroads.

and side tanks are carried on an independent frame which is connected to the truck-frames by centre and side bearings. The two high-pressure cylinders are carried on the rear trucks, and the two low-pressure cylinders on the forward truck. The steam connection between the two groups is shown in Fig. 152 in detail.

Pipe *F* serves as the receiver for exhaust-steam between the high- and low-pressure cylinders. Live steam is also

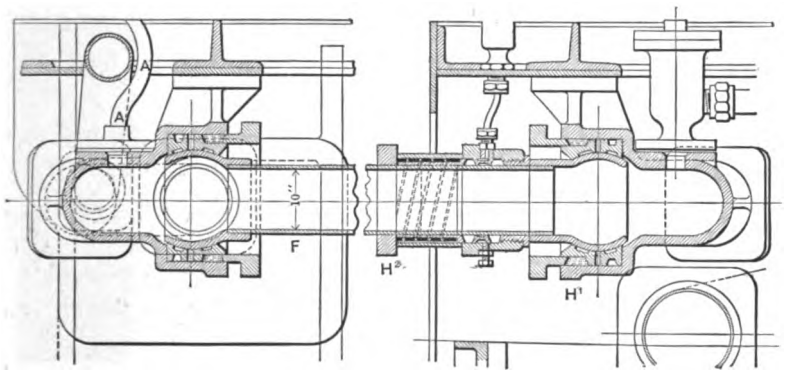

FIG. 152.

admitted into the pipe when starting non-compound. The joint is flexible and is made in the form of a ball and socket, so that any vibration or lateral movement between each truck can take place.

The starting-gear used is the Lindner gear. In this an auxiliary pipe (*AA*, Fig. 152) runs from the throttle-valve to a four-way cock, which is then connected to receiver by pipe *A–A*. The lever of this four-way cock is connected to the reverse-lever in cab and the movement of the latter in either direction, full forward or backward, will open the four-way cock and admit steam into the

receiver *F*, and the point of cut-off is about 70 per cent of the stroke and no live steam passes into the receiver in either direction unless the reverse-lever is at the point named.

It will be noted that the cylinders are placed in the trucks adjacent to each other, bringing the pull and thrust near the centre of the engine length. The valve-gear used is the Walschaert, and is so arranged that the point of cut-off for the high-pressure and the low-pressure cylinder is the same for any degree of expansion in both forward and backward gear. The ratio between high- and low-pressure cylinders is 1 to 2.35.

Slipping of the low-pressure wheels will be stopped when the amount of steam used will be in excess of that delivered by the high-pressure cylinders; also the high-pressure cylinders will be checked by the back pressure of steam in the receiver between the high-pressure and the low-pressure cylinder, therefore decreasing the power of the high-pressure wheels to slip.

The Walschaert gear is radically different in construction from that of the usual link motion used on locomotives and is outside-connected, there being no gear under the boiler. As shown (Fig. 153), it will be seen that the link is a box-link and is suspended in the centre upon which it swings or oscillates. To the lower end of the link is attached the connecting-rod which drives the link. This rod is attached or driven by a crank attached to the main crank-pin on driver and takes the place of the usual eccentric. *F'*, the block in the link, is attached to the valve-rod. In this valve-motion, owing to the fixed position of the link, means must be provided for a movement of the valve equal to

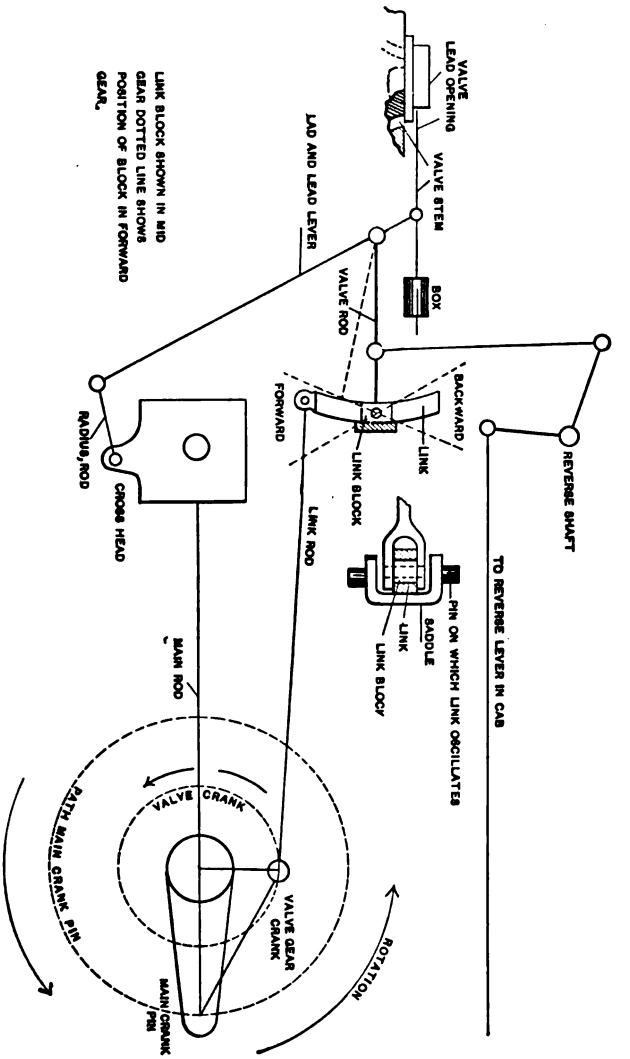
VALVE LEAD OPENING
VALVE STEM
BOX
LAD AND LEAD LEVER
VALVE ROD
LINK BLOCK SHOWN IN MID GEAR DOTTED LINE SHOWS POSITION OF BLOCK IN FORWARD GEAR.
BACKWARD
FORWARD
LINK
REVERSE SHAFT
TO REVERSE LEVER IN CAB
RADIUS ROD
CROSS HEAD
LINK ROD
PIN ON WHICH LINK OSCILLATES
SADDLE
LINK
LINK BLOCK
MAIN ROD
VALVE CRANK
PATH MAIN CRANK PIN
VALVE GEAR CRANK
MAIN CRANK PIN
ROTATION

FIG. 153.

the lap and lead. If not, when the block in the link approached the centre there would be no lead opening of the valve. There is a lap and lead lever. This lever is attached to one end of the cross-head by a link or radius rod. The valve-stem is carried in a sliding bearing at the outer end, and the upper end of the lap-lever is attached to this valve-stem and at a point below *a*, where the lap-lever is attached to the valve-stem. The rod from the block in the link is connected to the lap lever in such manner that the distance between these two points is of such length that upon the movement of the lower end of the lap-lever by the cross-head will move the valve the length of the lap and lead and in advance of the piston-heads. The point of cut-off is varied by moving the link-block in the link by a reverse-shaft, which in this case is underneath the truck frame, and between the drivers is a link attached to the valve-rod and the lifting-arm. The reversing is done by moving the link-block to a point above or below the centre of the link. As will be understood, that portion of the link above the point of suspension moves in the opposite direction to that below the suspension-point.

Data:

Grate-area	14.75	square feet
Heating-surface	930	" "
Heating-surface in fire-box	58.2	" "
Heating-surface in tubes	871.2	" "
Weight of engine, complete with fuel and water	112,400	pounds
Tanks hold	1200	gals. water
Coal	4000	pounds

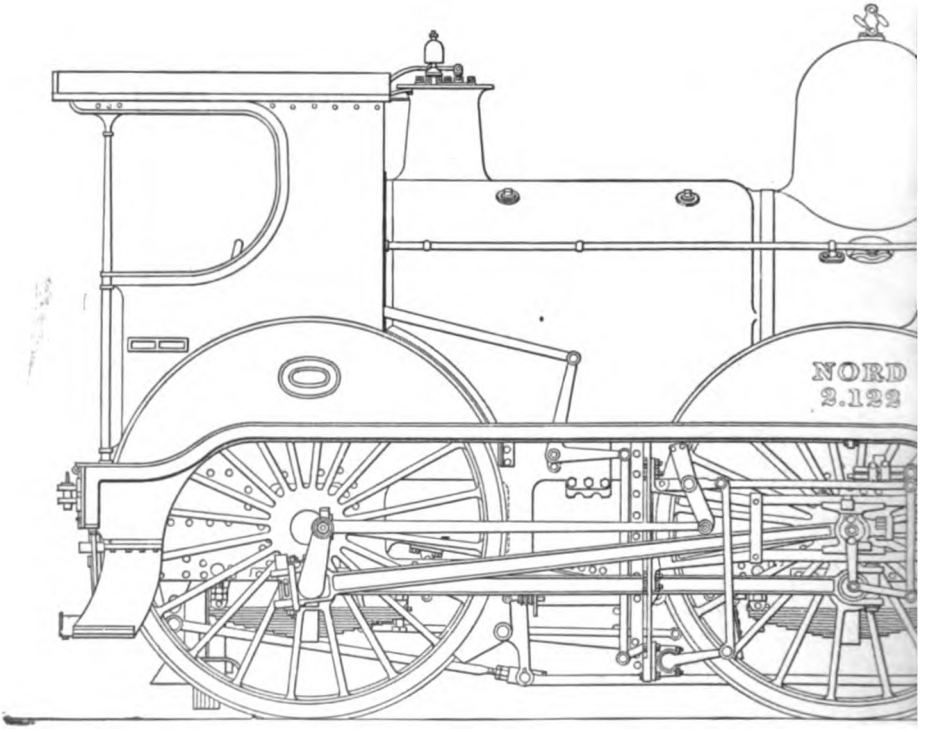

FIG. 154.—Four-cylinder Compound Fast Pas

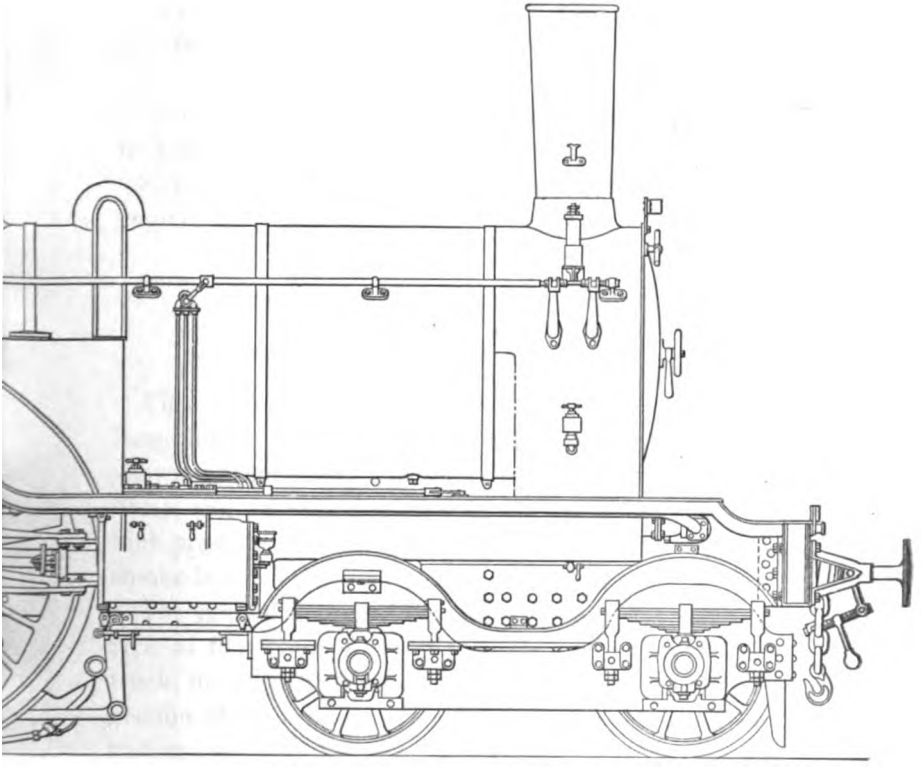

er Locomotive, Northern Railroad of France.

[*To face page* 289.

High-pressure cylinders, diameter. ..	11.8 inches
Low-pressure cylinders, diameter....	18.1 "
Stroke.....	21 "
Driving-wheels, diameter.....	43.3 "
Steam pressure.....	170 pounds

Heaviest load hauled, 150 tons (2240 pounds), up-grade 132 feet to the mile, 3½ miles long, several curves 656 feet radius, at a speed of 9½ miles an hour.

These engines being the forerunner of the engines built in America, it was thought proper to include a description which would stand as a comparison to the late-built engine.

A COMPOUND FAST PASSENGER LOCOMOTIVE.*

(From the *Engineering Journal*. August, 1892.)

Figs. 154–156 show a general view of the engine: a longitudinal section and half-plan; two cross-sections showing respectively the high- and low-pressure cylinders; and an enlarged view of the valve by which the high-pressure exhaust can be turned directly into the smoke-box.

The general design of the engine follows the American type of four coupled driving-wheels and a four-wheeled truck, the peculiarities being in the arrangement and connection of the cylinders. It is a four-cylinder compound having two high-pressure and two low-pressure cylinders connected through an intermediate reservoir. The two high-pressure cylinders are placed outside and imme-

* Northern Railroad of France. M. du Bousquet, Chief Engineer.

diately in front of the forward drivers; their connecting-rods extend to the outside crank-pins of the rear pair of drivers. The low-pressure cylinders are inside, in the smoke-box, and are connected with cranks on the forward driving-axle. The driving-wheels are coupled by parallel rods outside in the ordinary way. This arrangement was adopted after careful consideration and as a result of experience with a four-cylinder compound engine built some time before. The driving-axles are placed one in front of the fire-box and the other behind it.

It may be noted that the cranks of the high- and low-pressure cylinders are not at an angle of 180°, but at 162° —an arrangement adopted to assist the engine in starting.

The boiler is built for a working pressure of 190 to 200 lbs. The barrel is 49.8 in. in diameter inside the smallest ring, and has 202 tubes 1.77 in. in diameter and 12.8 ft. long. The fire-box is 58 in. in depth at the back end and 68 in. at the front; the grate area is 21.96 sq. ft. There is a deflector or water-leg of a kind much in use on the Northern Railroad, and known as the Tenbrink deflector. The heating-surface is: Fire-box—including deflector—146.7 sq. ft.; tubes, 1054.87 sq. ft.; total, 1200.94 sq. ft. The fuel generally used is bituminous coal mixed with briquettes of compressed fuel, which are much used in France

The truck has a plate frame and outside journal bearings; the springs are not equalized. The wheels are 40.9 in. in diameter, and the axles are spaced 4 ft. 11 in. between centres.

The driving-wheels are 83.2 in. in diameter, and the driving-axles are 9.84 ft. between centres. The distance from the rear driving-axle to the centre of the truck is 21

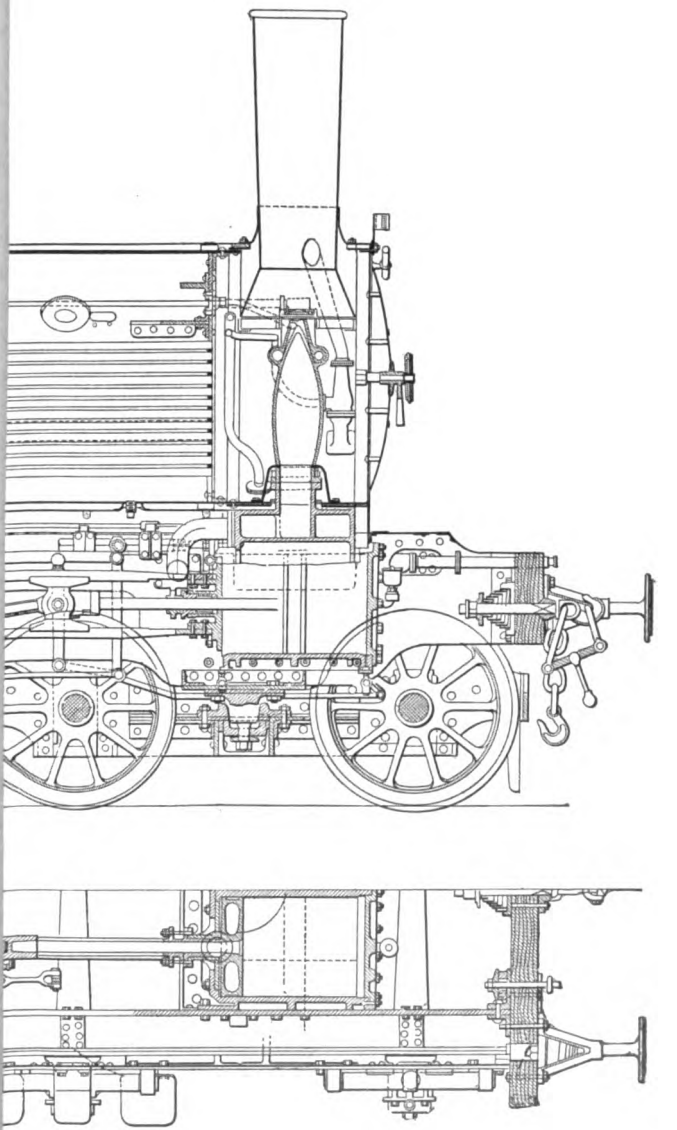

[*To face page* 290.

ft. 11 in. The crank-axle for the forward drivers is of the Worsdell type, with circular jaws.

The frames are of the plate type, and are of steel plate 1.1 in. thick. They are solidly braced together in front of the forward driving-axle by a cast-steel box or frame, which also serves to carry the guides for the low-pressure cylinders. The guides, both inside and outside, are double, with cross-heads of the ordinary type, as shown in the engraving. The driving-springs are not equalized.

The high-pressure cylinders are 13.4 in. in diameter and 25.2 in. stroke; the low-pressure cylinders are 20.9 in. in diameter and 25.2 in. stroke. The ratio of the cylinders is 1:2.42. The size of the intermediate reservoir is such that the ratio between the volume of the two high-pressure cylinders and that of the reservoir is 1:1.36. When working at a boiler pressure of 195 lbs. the pressure in the intermediate reservoir is about 85 lbs.

The valve-gear is of the Walschaert type and there is a separate valve motion for each cylinder. The motions for the high-pressure cylinders are entirely outside, as shown in the drawing. The position of the steam-chests is indicated in the cross-sectional views. The valves of both high- and low-pressure cylinders have 1.07 in. outside lap and 0.12 in. inside lap.

The reverse-levers for the two sets of valve motions are placed side by side, and are so arranged that they can be worked together or separately at the will of the engineer, the connection between the two levers being made by a spring-catch and pin. This enables the engineer to vary the admission to the two sets of cylinders as may be found most advantageous in practice.

For use in starting, or in emergencies when additional

power is required, an arrangement is provided by which the exhaust from the high-pressure cylinders can be turned

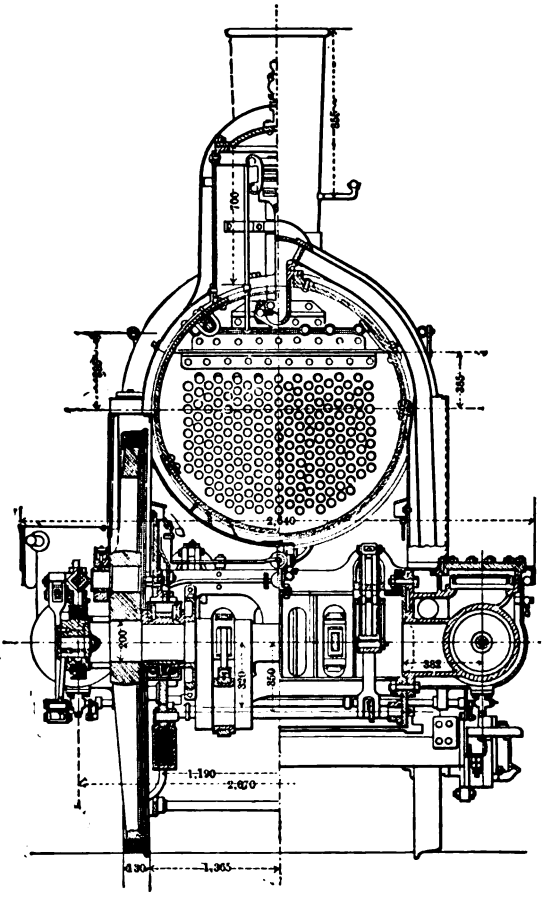

FIG. 156.

directly into the smoke-stack, while at the same time steam from the boiler is admitted through the intermediate

reservoir to the low-pressure cylinders. Experience has shown that the simple admission of high-pressure steam

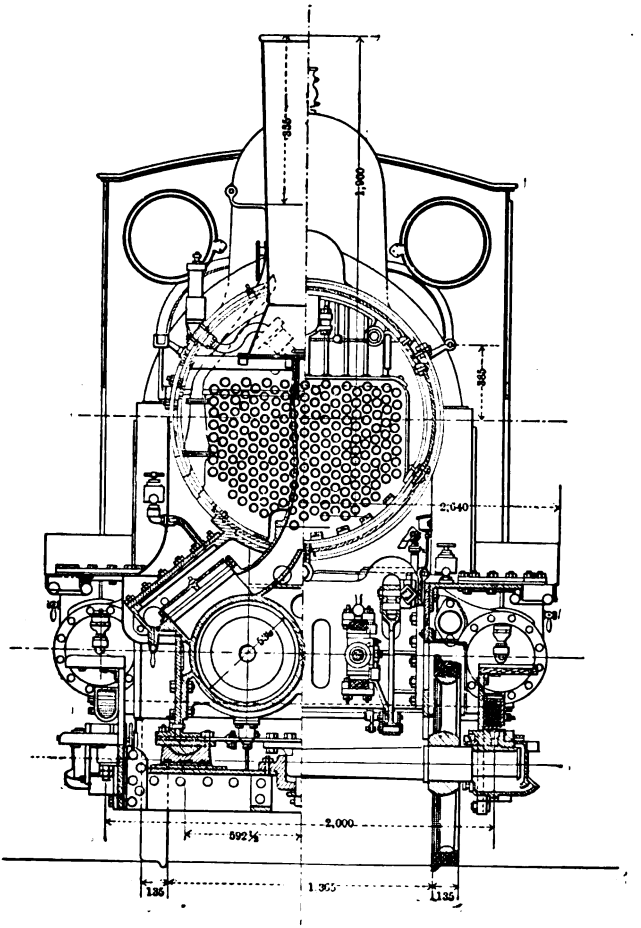

FIG. 157.

to the reservoir, without disposing of the exhaust from the small cylinders, creates a back pressure in the latter

which must be taken into consideration. This apparatus is shown in detail in Fig. 158, and consists of a valve with three openings which is attached on each side to the exhaust-pipe connecting the high-pressure cylinder with the intermediate reservoir. The exhaust-pipe enters a cast-iron box, *A*, the connection being made by an expansion-joint and stuffing-box, *C*. The cylindrical valve *B*, according to its position, permits the exhaust steam to continue directly forward on its way to the reservoir and the low-pressure cylinders, or turns it into the pipe *T*, which leads to the smoke-box. When the valve is placed, as shown in the engraving, the high-pressure exhaust thus passes directly to the smoke-stack. A quarter-turn of the valve *B* is sufficient to make the change. Motion is given to the valve by the rod or stem *t*, which passes through a stuffing-box *L*. As the working of this valve from the cab by rods and levers would require a somewhat complicated arrangement, it is operated by a small steam cylinder, the piston-rod of which is connected to a lever keyed on the valve-rod *t*. Steam is admitted to this cylinder from the boiler by opening a small valve, and the whole arrangement is a very simple one.

The total weight of this engine ready for service is 105,350 lbs., of which 38,130 lbs. are carried on the truck, 33,830 lbs. on the forward drivers, and 33,390 lbs. on the rear drivers; the total weight on the drivers, which is utilized for adhesion, is thus 67,220 lbs.

The tender is carried on six wheels of 49.1 in. in diameter. It will carry 3900 gals. of water and 8800 lbs. of coal. The total weight with a full load of coal and water is 74,050 lbs.

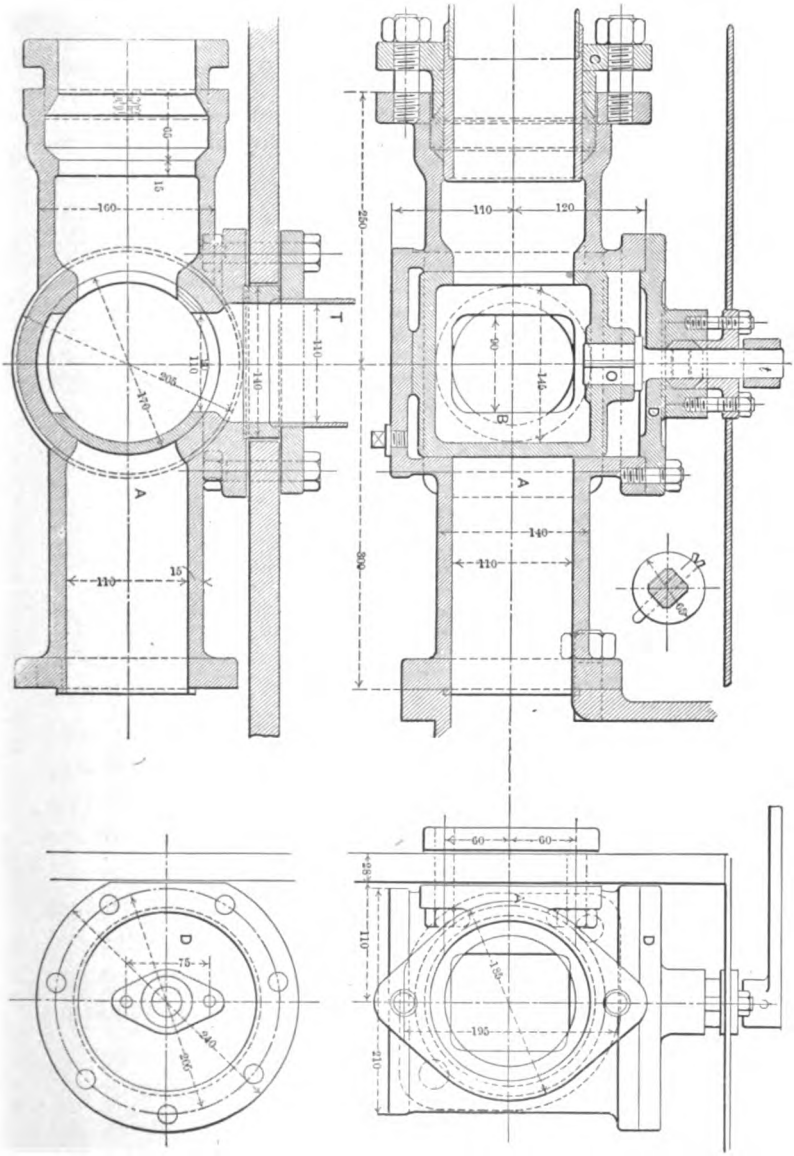
A
B
C
D
T
O
M
160
110
120
140
205
170
90
145
250
300
60
75
240
200
185
195
210
28

FIG. 158.

The total wheel-base of the engine and tender together is 43.8 ft., and their total length outside of the draw-heads is 53.9 ft.

In service these engines are employed on the fast express-trains between Paris, Amiens, and Lille, where a high speed is required, with trains varying in weight from 110 to 200 tons, exclusive of the weight of engine and tender. The average speed of these trains is from 45 to 50 miles an hour. With a train of 140 tons, one of them has made the run from Paris to Amiens, 81 miles, in 90 minutes, or at the rate of 54 miles an hour; and with a train of 200 tons it has made the run from Paris to St. Quentin, 95 miles, in two hours, or at the rate of 47½ miles an hour. In their regular work they are frequently called on for exceptional speed where it is necessary to make up time on account of delays on connecting lines or other causes.

Among these exceptional performances are included a run at the rate of 43.5 miles an hour up a long grade of 0.8 per cent., the train weighing 140 tons, or 220 tons with engine and tender; a run at 46.6 miles an hour up a grade of 0.5 per cent. with a train of 225 tons, or 305 tons, including engine and tender; a run at 55.9 miles an hour on a level with a train of 210 tons, or 290 tons, including engine and tender.

Among the excellent points shown by these engines have been quickness in starting and in reaching full speed from a stop; great stability at high speeds, and an economy in fuel as compared with other engines doing the same work.

A FOUR-CYLINDER COMPOUND LOCOMOTIVE.

(Condensed from Mémoir of M. du Bousquet in the *Revue Générale des Chemins de Fer.*)

M. G. du Bousquet, Engineer and Inspector General of Motive Power of the Northern Railroad of France, was commissioned to make some experiments with the compound locomotive. For this purpose it was decided to adopt the Woolf system, with four cylinders, the cylinders arranged in pairs, or tandem, as it is called. The locomotive selected for the trial was one of those used for working the coal traffic of the road, having four driving-wheels, coupled, with the entire weight upon these wheels. The dimensions of this engine before alteration were as follows:

Diameter of cylinders.....	0.500 metre
Stroke.....	0.650 metre
Diameter of driving-wheels.....	1.300 metres
Total weight of engine.....	44.700 tons
Grate-surface.....	2.08 sq. metres
Heating-surface, fire-box.....	9.20 sq. metres
Heating-surface, tubes.....	116.78 sq. metres
Heating-surface, total.....	125.98 sq. metres

The alterations, which were made in the shops of the company at Hellemmes, consisted in the substitution of new cylinders for the old ones, with the necessary modifications in the guides and valve motion. In consequence of the greater length of the cylinder casting for the compound cylinder a slight lengthening of the frame is necessary, 0.545 metre being the addition. The compound cylinders—high- and low-pressure—were cast in a single

piece, the intermediate head being riveted in. The small cylinder projecting backward beyond the tire of the first wheel, it was necessary to cut the cylinder-head at the side, as shown in the accompanying illustrations.

In these drawings Fig. 159 is a section of the cylinders and steam-chest; Fig. 160 a side view or elevation of the cylinder casting; Figs. 161 and 162 show the cross-head;

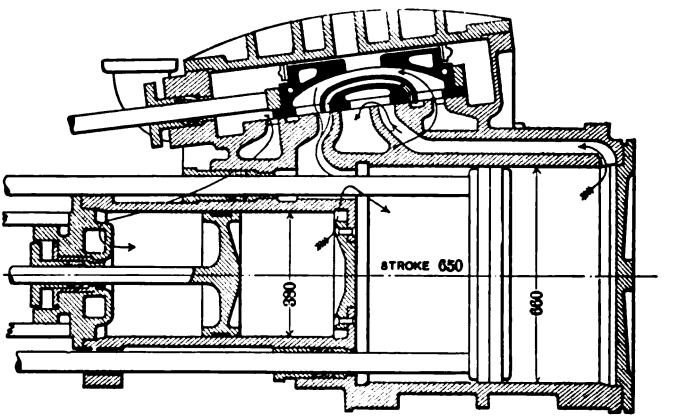

FIG. 159.

Fig. 163 is a view of the back cylinder-head, showing the arrangement of the guides and the stuffing-boxes, while Fig. 164 is a sketch of the locomotive, showing its general arrangement. The valve-gear used is the link motion with the solid link, which is very commonly used in France.

The steam-chest is placed above the two cylinders, as shown in Fig. 159; there is a single valve moving on a valve face having five ports. The two outside ports communicate with the high-pressure or small cylinder; the two intermediate with the low-pressure or large

cylinder, while the central port is the exhaust. The exhaust-port is in the same position with relation to the frame as that of the old cylinder.

The valve is made with a second passage, as shown in Fig. 159, through which the exhaust from the small cylinder passes into the large cylinder at one end or the other, according to the position of the valve. This passage is, in

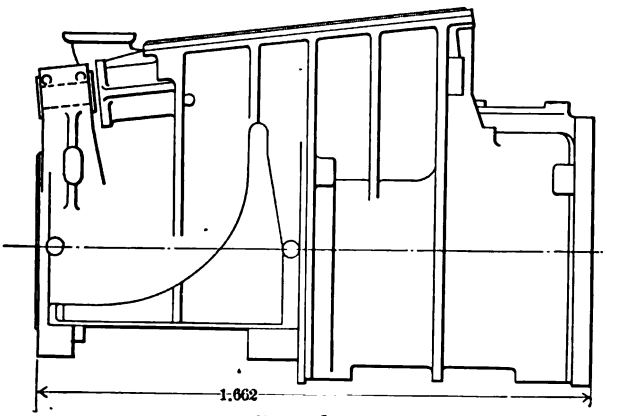

FIG. 160.

fact, the intermediate reservoir for the steam. Its area is 16.5 per cent. of that of the small cylinder.

The passages which conduct the steam from the valve-chest to the small cylinder are longer than usual, and in this way the necessary enlargement of the free spaces of that cylinder is obtained by the position of the steam-chest; they have, in fact, been increased to 16.4 per cent. of its area. The two useless spaces of the large cylinder can thus be made very small; the back space is small in any event, while the forward space can be diminished by moving the steam-chest slightly forward of the centre. In this

engine the area of these spaces was 7 per cent. of that of the cylinder.

The size adopted for the compound cylinders was 0.380 metre diameter for the small, and 0.660 metre for the large cylinder, the stroke remaining 0.650 metre. The ports of both cylinders have the same length, 0.044 metre. A

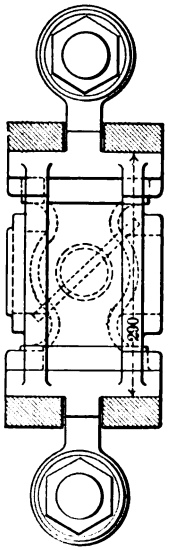

FIG. 161.

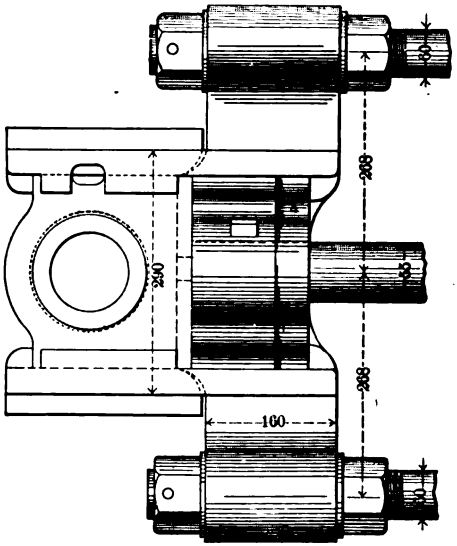

FIG. 162.

small opening of the valve gives a sufficient area for the admission of steam to the small cylinder, while for the large cylinder the valve adopted gives really a double opening.

The valve, which is of bronze, has a rectangular form on the face, but above it is cylindrical, and a groove turned in the cylindrical part receives two segments of cast iron. A ring of cast iron, carefully bored out, is

placed upon these segments which form a sort of piston; this piston is held in place by the pressure of steam and by four springs which are placed on the upper surface of of the rings, which, while leaving it free to turn, give it a constant bearing against the steam-chest cover. The pressure of the steam contained in the steam-chest is

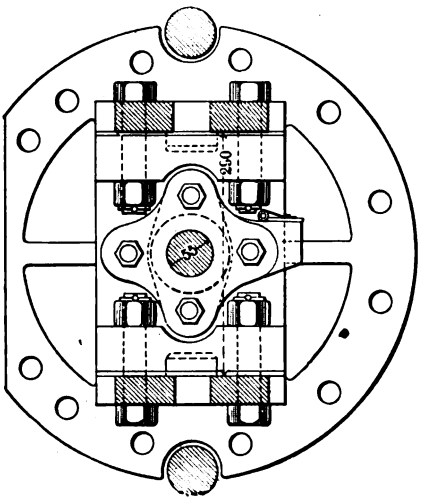

FIG. 163.

then only felt on the rectangular surface of the base of the valve, which is diminished, of course, by the interior surface of the ring, which is 0.480 metre in diameter. Pressure on the valve is thus very light, and is, in fact, insufficient to hold it in place when the central part is in communication, as in an ordinary valve, with the air. For this reason it was found desirable to put this part in communication with the steam held in the intermediate passage by drilling a small hole in the upper part. In practice it was found that, in spite of the large dimensions

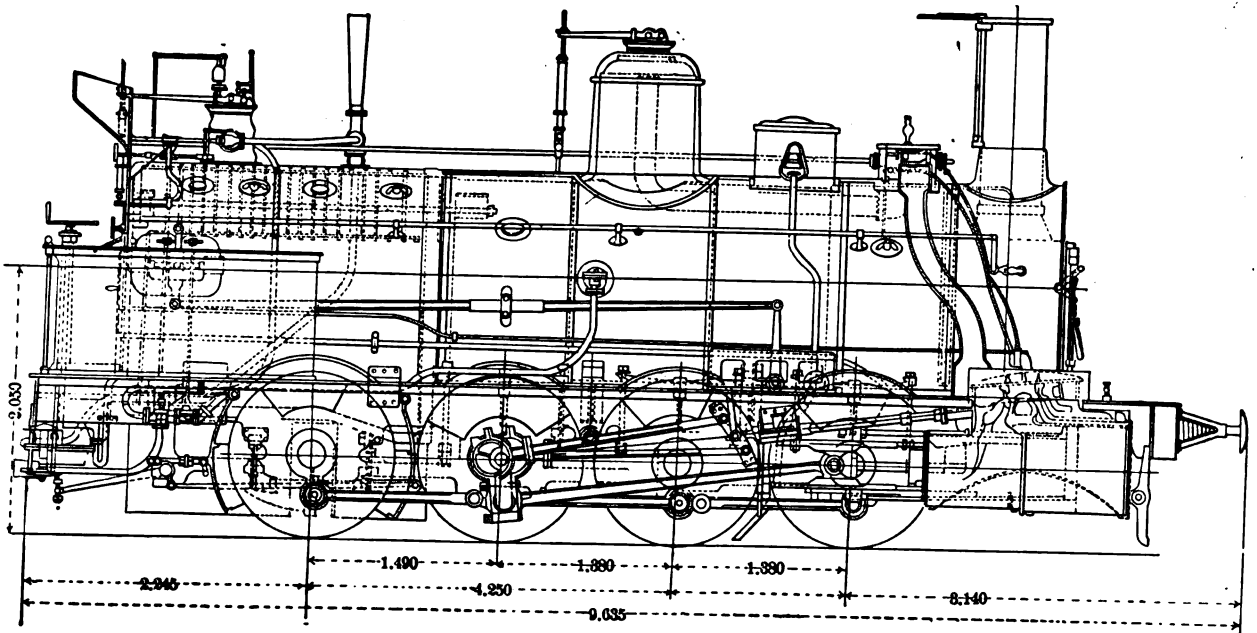

FIG. 164.

of the valve—0.605×0.520 metre—the friction between the valve and the valve-seat could be diminished as much as desired. It may be noted that any slight leakage of steam around the ring would be of no importance, as the steam would pass directly into the large cylinder.

The piston of the large cylinder is of cast iron, with the ordinary packing rings, and has two rods placed far enough apart to pass one on each side of the small cylinder. In this way any use of interior stuffing-boxes is avoided.

The small piston is of wrought iron forged in one piece with the rod. The three rods are connected with the same cross-head, which is of cast steel; the central rod—that of the small cylinder—being held by a key, the two others fitting in taper holes, and held in place by two nuts, as shown in Figs. 161 and 162.

The guides, which are of steel, are made double on account of the form of the cross-head, so as to permit the arms to which the two piston-rods of the large cylinder are attached to pass through them. They are supported at the back end by a yoke or brace in the ordinary way, and at the front end are bolted to lugs cast on the back cylinder-head as shown in Fig. 163.

It will be seen that when it is necessary to take down the pistons, that of the small cylinder must be taken out from the back, and that of the large cylinder from the front.

In this arrangement it will be seen that the breakage of the intermediate head would have serious consequences. Such a breakage might be produced by the breaking of the small piston-rod or by the breaking of the connecting-rod. In order to avoid the first case, it is important to

make the piston-rod large enough; it may also be remarked that even if it should break, the small piston would not strike the cylinder-head with the same force as in an ordinary locomotive, first, because the counterpressure is considerable, and, second, because the steam exhausts into the confined space of the large cylinder, and not freely into the air. The second case is more to be feared, but the remedy is easy; it is to leave more clearance before the small piston at the end of its stroke than before the large one; the large piston would then strike first and the front head of the cylinder would receive the main shock. It is also possible to adopt an arrangement by which the cross-head would strike the end of the guides before the piston would strike the head.

The exhaust used is the ordinary variable exhaust employed on this class of engine. The only change is that the blast-pipe is somewhat larger, the section having been increased from 229 to 308 sq. cm., the steam being more expanded and requiring a greater space; moreover, the right- and left-hand exhaust are separated by a partition which is carried up nearly to the head of the blast-pipe. This arrangement has been found to work very well, and steam pressure is easily kept up in the boiler, even during long stops.

It may be noted that in order to diminish resistance when steam was shut off while the locomotive was in motion, to avoid heating and to prevent the drawing of gas and cinders into the cylinders, a small valve was placed on the steam-chest cover by which the air could be admitted. This was easily worked, and was found to give very good results.

The increased weight of the new cylinders threw too

great a proportion of the weight on the forward drivers; this was remedied by using a heavy cast-iron foot-plate at the rear of the engine; this weighed 3000 kilos. The total weight of the machine was increased by 7000 kilos, its weight after alteration being 51.700 tons.

The weight of the engine and its distribution, before and after alteration, was as follows in tons:

	As Altered.	Old Weight.
On first pair of drivers.....	13.460	12.200
On second pair of drivers....	14.240	11.100
On third pair of drivers.....	13.980	12.100
On fourth pair of drivers....	10.020	9.300
Total, tons.....	51.700	44.700

A special steam-valve 3 cm. in diameter, placed behind the throttle-valve, permits steam to be admitted directly into the large cylinder. The pipe which conducts steam from this valve passes through the centre of the valve-seat and communicates with the passage which forms the reservoir between the two cylinders. In this way steam can, if desired, be admitted directly to the large cylinders, but in practice this is not found necessary either in switching or in ordinary running on heavy grades; it would be, moreover, unfavorable to the proper utilization of the expansive force of the steam.

This special admission of steam, however, is useful in case of a chance stoppage on a heavy grade, as it permits the starting of the train with all couplings in tension, and without a jerk. It will be seen that under these conditions breakages of couplings are much less to be feared.

Each double cylinder is furnished with four-cylinder cocks to discharge condensed water, the same as in an ordinary cylinder.

It is important in compound engines to take some precautions to avoid a useless waste of oil. In the engine described the only additional lubrication required was for the piston of the large cylinders. For this purpose the Consolin oiler was used, by which the steam is charged with oil in its passage from the valve, no attempt being made to lubricate the parts separately.

The first trials of this engine were made upon the main line of the road, where it was put into service hauling coal-trains, and where its work was compared with that of other engines of the same class with the ordinary simple cylinders. The usual load of these trains was 675 tons, or 45 coal-cars; with the compound engine this load was increased to 60 cars or 900 tons. The trip made was from Lens to Longueau, and return, 170 kilometres. This trial was made during the month of January, when the conditions are usually most unfavorable to traction. The starting from Lens was always made without trouble, although somewhat difficult, since the start from the yard tracks is on a grade of 1 per cent., and over a very sharp curve and a train enters immediately upon a grade of 0.5 per cent., 10 kilometres in length.

On certain trips the engine ran through to La Chapelle; on one of them the load of 900 tons was taken from the station at La Chapelle to the coal switches there over a grade of 1.5 per cent., 600 metres long, at the foot of which the train had to be started. To get over this difficult point it was necessary to use the direct admission of steam to the large cylinders; diagrams taken, however, with this admission showed that, owing to the small opening of the valve, 3 cm., there was not the full boiler pressure upon the large pistons, and that, consequently, the strain

upon the working parts was not too great. It was found that the boiler was sufficient to supply all the steam needed.

The officers in charge of the train service considered that it was not advisable to run more than 45 cars to each train on the main line, as they believed it more desirable to increase the speed than the load. For this reason it was determined to make a new series of trials on the branch from Valenciennes to Hirson, on which there are grades varying from 1 to 1.25 per cent., and which has a very irregular profile. The usual train-load on this branch was 422 tons over about one-half of its length, and 387 tons on the remaining half, where the heaviest grades were situated. With the compound engine this load was increased to 540 tons over the whole line.

The following table shows the results obtained in the consumption of fuel on these trials with different loads. The fuel used was generally waste coal containing a large proportion of slack, with enough briquettes (prepared fuel) to maintain a good fire, and it may be noted that the compound engine required a much smaller proportion of the briquettes than the other. The table gives the consumption of fuel per kilometre with different train-loads, No. 4729 being the compound engine, and No. 4728 another engine of the same class which has not been altered.

Train-load.	Kilog. burned per Kilom. No. 4729.	No. 4728.	Per cent. of Saving.
400 tons.....	17.3	20.0	13.5
450 tons.....	26.5	20.0	24.5
500 tons.....	25.2	19.6	22.4
540 tons.....	35.2	27.0	23.6

After this series of trials the two engines with which they were made were put, in July, 1888, in ordinary service

between Fives and Hirson, hauling the same trains on alternate days. The station agents had orders to put a load of 522 tons on the compound engine and 462 tons on the other, these loads being calculated on the limit of adhesion. The table below gives the results obtained in the consumption of fuel per kilometre, No 4729 as before being the compound engine, and No. 4728 the other; this trial was extended over two months, and the results are averaged for each month:

Month.	Kilog. burned per Kilom. No. 4729.	No. 4728.	Per cent. of Saving.
July.....	13.81	15.86	12.9
August.....	14.18	15.94	11.0

It will be seen that in this case the saving in fuel, in spite of the increase of 13 per cent. in the load, was from 11 to 13 per cent., while the expense of lubrication was less for the compound engine than for the other. If the load be taken into account, the saving in fuel per kilometre-ton was from 27.2 to 21.1 per cent.

STANDARD COMPOUND EXPRESS LOCOMOTIVE OF SAXON STATE RAILROADS.

It will not be necessary to dwell upon the general construction of the engine, so clearly is it shown by the illustrations; but it may be well to point to some of the interesting features, such as the use of a brick arch in the fire-box, a peculiar grate-bar, suitable for finely divided or coarse coal, and others. The method of supporting the crown is novel, having a crown-bar at the sides longitudinally with the box and radial stays in the centre; the fire-box is made of copper and the boiler-

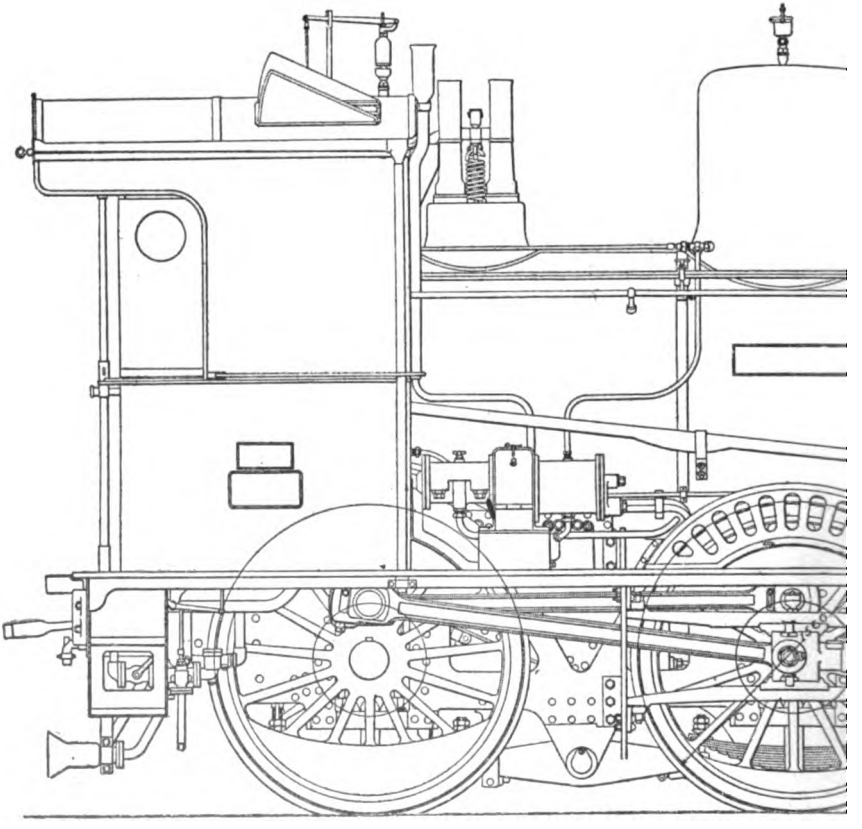

FIG

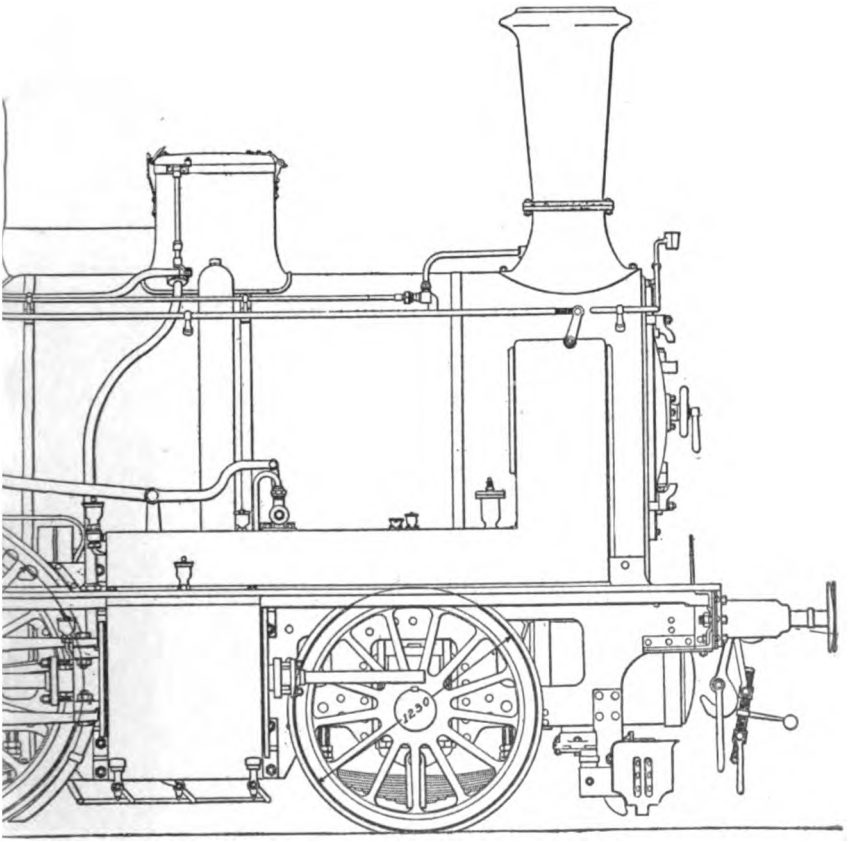

54a.

[To face page 308.

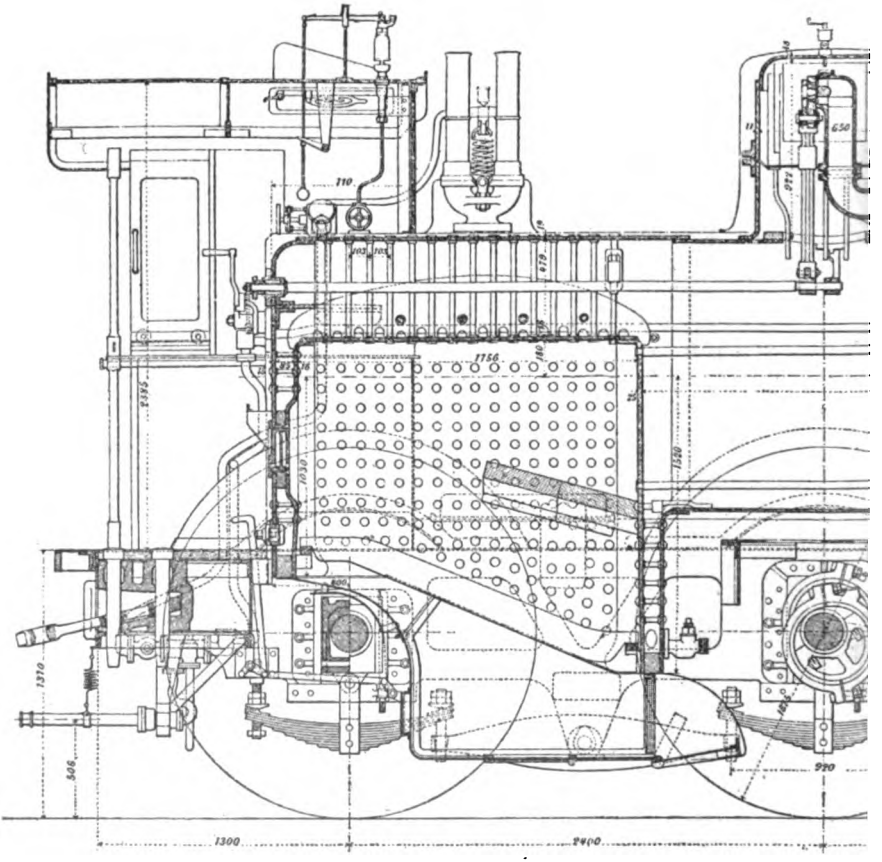

FIG. 165.—The Standard Compound Ex

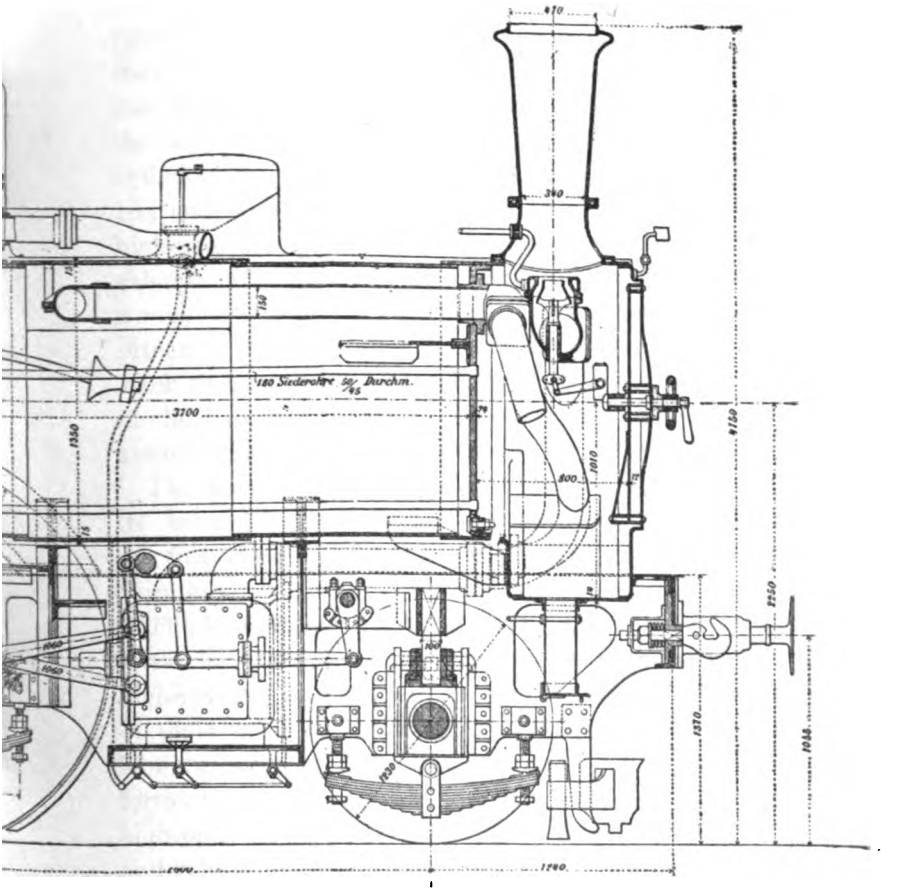

ess Locomotive of the Saxon State Railroads. [*To face page* 309.

shell of steel; in the dome is placed a steam separator, consisting of a series of cylinders arranged so as to form a tortuous passage for the steam from the boiler-shell to the throttle. It is intended with this last device to remove as much as possible of the water, which is often carried over with the steam into the cylinders. Also may be mentioned the steam-pipe to the cylinders, which can hardly be termed a dry pipe, as it passes outside of the boiler from the side of the dome, forward as far as the cylinders, and directly around the boiler, as shown in Figs. 164 and 164*a*. There it enters the steam-chest of the high-pressure cylinder. In the smoke-box is a variable exhaust of unique design, forming with the smoke-stack a very satisfactory exhausting apparatus on the ejector principle. The method of admitting steam into the stack to blow the fires is clearly seen in the illustration at the base of the stack, where a small pipe enters an annular ring around the exterior of the exhaust-nozzle.

The peculiar joint in the dome, about midway of its vertical height, is for the purpose of permitting an inspection of the water-separating apparatus and throttle.

The location of the starting-valve which admits steam to the low-pressure cylinder is shown just in front of the high-pressure cylinder. It is operated by an extension of the reach-rod, as clearly seen from the illustration The exhaust-pipe from the high-pressure cylinder, which forms the receiver, passes, as will be noticed, from the high-pressure cylinder forward through the smoke-box, and returning on the other side to the low-pressure cylinder. In this design the cylinders are located considerably in the rear of the smoke-box. The steam-chest

valve for the low-pressure cylinder has the Allen or Trick port to assist admission of steam to that cylinder. This is clearly seen from the plan of the engine. The piston-rod for the low-pressure cylinder is extended through the front cylinder-head and works within a case attached to the stuffing-box, as shown in the plan. This covering for the piston-rod is not uncommon on the Continent. The location of the air-pump is horizontal and just in front of the cab. The brakes are constructed on the Carpenter system, which is used on all the state roads in Germany. The general features of construction are most clearly seen from the outline drawing showing the exterior of the locomotive. The link motion shown on this engine is known as the Allen link motion. It differs from the ordinary motion principally in having a straight link, not curved. The links are located on the inside of the engine and are driven from the forward axle, which is not the axle to which the main connecting-rod is connected. The location is shown on the plan, and the design of reversing-gear can be seen on the side elevation. It will be noticed that the link is connected to one arm of the reversing-shaft, and the connecting-rod from the link to the rocker is raised and lowered by another arm of the reversing-shaft. Therefore, when the engine is reversed, both the link and also the connecting-rod to the rocker are raised or lowered as the case may be.

Since 1885 the Royal Saxon State Railroads have compounded quite a number of locomotives, and through experience have developed a form of admission-valve which permits trains to be started with great evenness. The locomotives of the Saxon State Railroads which are compounded and supplied with the Lindner admission-

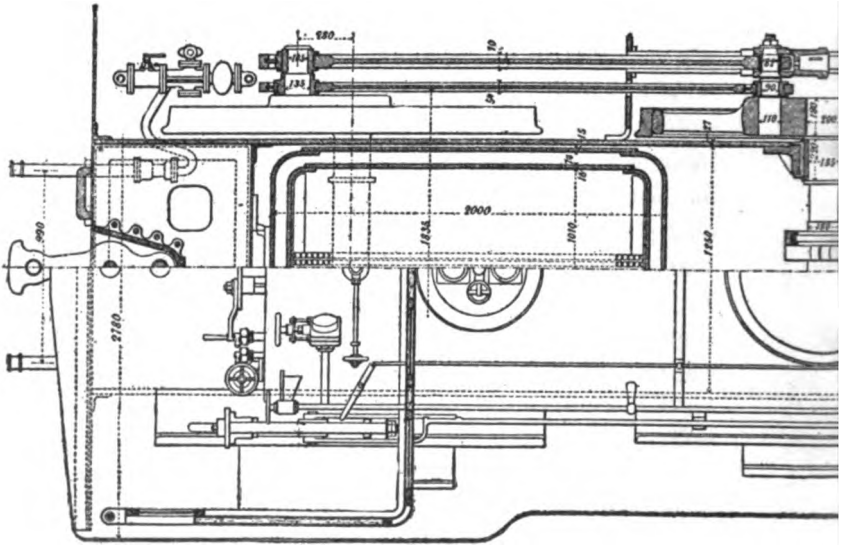

Fig

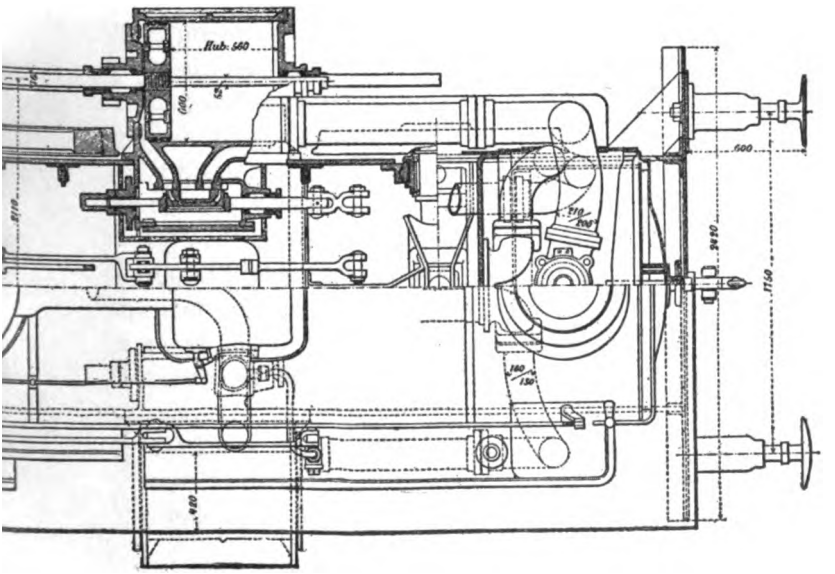

;a.

[*To face page* 310.

valve, work with satisfaction in starting trains, and show an economy in fuel consumption of about 20 per cent. These locomotives draw express trains of ordinary speed on the Dresden and Chemnitz line, which has inclines of 1 in 40 and 1 in 60 for 9 miles in length. It draws up these inclines seventeen German cars without stopping, and also will start such trains upon the inclines at any position of the cranks. The principal dimensions of the locomotives are as follows:

Steam pressure	177 lbs. per sq. in.
Grate-surface	19.6 square feet
Heating-surface in fire-box	85.7 " "
Inside heating-surface of tubes	958.3 " "
Total heating-surface	1044.0 " "
Actual weight, empty	80,924 pounds
Actual weight, ready for service	89,303 "
Weight available for adhesion	60,196 "
Diam. of the high-pressure cylinder	16½ inches
Diam. of the low-pressure cylinder	25½ "
Proportion of the cylinder cross-sections	1:2.4
Proportion of the contents of the receiver to that of the high-pressure cylinder	2.46:1

This locomotive has several arrangements peculiar to the Saxon State Railroads, such as the water partition in the dome, which, it will be noticed, tends to subdivide the steam in a considerable degree before it enters the throttle. It is expected in this way to collect a large percentage, if not all, of the water which would otherwise pass over to the cylinders. The forward axle is

carried in movable boxes, by means of which it can assume any necessary position with reference to the rails. The movable boxes are attached to a cross-tie, which binds them together, and which in the middle has a trunnion whereon it can turn. At the ends of this centrepiece are oblique or incline surfaces on which the spring supports can slide. In action these locomotives are very satisfactory. Steam is freely made, scarcely no sparks are thrown, and no spark-catcher is needed when firing, even with brown coal. By a proper arrangement of the receiver with regard to drainage, and by loosely fitted cylinder cocks in the low-pressure cylinder, no water is thrown, when the engine starts, through the smoke-stack. By reversal of the engine and the admission of steam into the opposite sides of the piston when the locomotive is running ahead, and by the opening of a brake-cock, which admits a mixture of steam and water into the exhaust-pipe of the low-pressure cylinders, the locomotive can be let down the steep inclines at any speed with perfect safety. The safety-valve arranged on the receiver leads away the larger part of the hot mixture of air and steam, and only a small portion of it reaches the boiler. The indicator diagrams herewith show the good working of the locomotive when braked, and show how equal is the division of the work of braking in the two cylinders.

A HUNGARIAN COMPOUND LOCOMOTIVE.

Fig. 166, taken from the *Revue Générale des Chemins de Fer*, shows a compound locomotive for express traffic recently built for the Hungarian State Railroads. As

will be seen from the sketch the engine has four driving-wheels connected and a four-wheel truck. The cylinders are outside and are placed in tandem, the low-pressure cylinder being in front and the high-pressure cylinder behind, the pistons of both being connected to the same rod. The low-pressure and the high-pressure cylinders are entirely distinct castings, and the connection between them is made by means of a steam-pipe which serves as an intermediate reservoir. The valve motion is outside, and is of the Walschaert type, the same valve-rod moving the valves of both cylinders. The reversing-gear is of the screw type, and can be closely adjusted. The throttle-valve is so arranged that live steam from the boiler can be admitted to the low-pressure cylinder, and the reversing-gear is also arranged so that when it is in full gear, forward or backward, live steam enters the intermediate reservoir, and consequently the low-pressure cylinders. The boiler is of steel and has a very long fire-box, with an inclined grate for burning the coal which is ordinarily used on the Hungarian Railroads, and it is a sort of lignite. The frames are of steel and of the plate type ordinarily in use in Europe, and the truck-frames are also of steel plate. The boiler is built for a working pressure of 165 lbs.

The high-pressure cylinders are 0.370 m. (14.57 in.) and the low-pressure cylinders 0.550 m. (21.65 in.) in diameter, both being 0.650 m. (25.58 in.) stroke. The ratio is 1 : 2.20. The driving-wheels are 2 m. (6.56 ft.) in diameter, and the truck-wheels 1.05 m. (41.33 in.). The total weight of the engine ready for service is 119,900 lbs., of which 61,500 lbs. are on the driving-wheels, and 58,400 lbs. on the truck. The conditions which this engine was

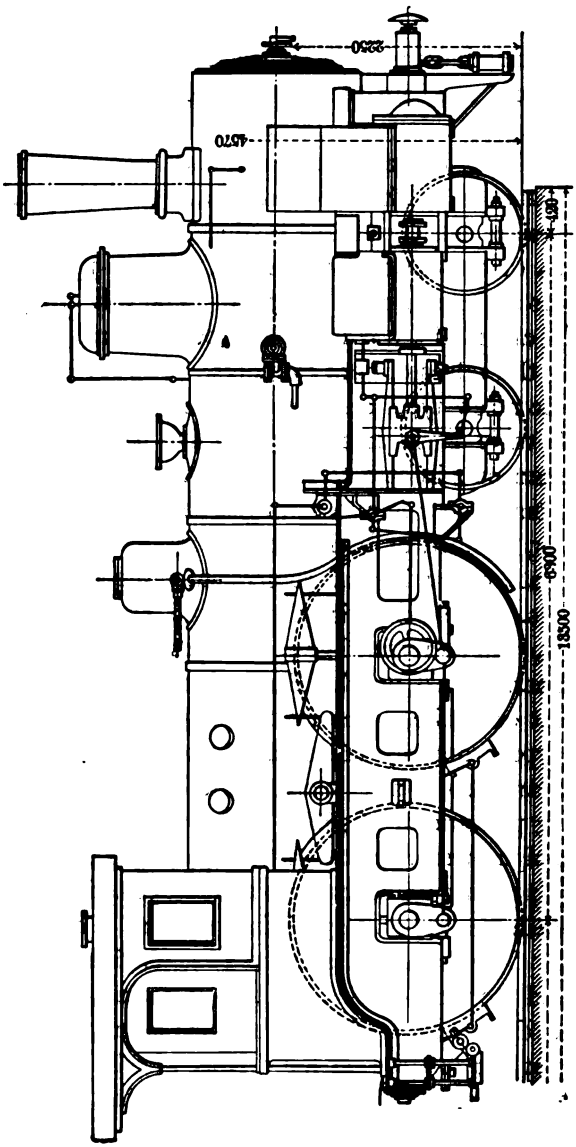

FIG. 166.—Hungarian Tandem Compound.

built to fulfil were that it should draw a train weighing 160 tons over grades of 0.67 per cent., having curves of small radius, at the speed of 37 miles an hour, and that with the same train on a level it should be able to reach a speed of 49 miles an hour. The weight on an axle was not to exceed 14 tons. One object of the design was to secure the greatest possible amount of grate-surface on account of the nature of the fuel, and also to keep down the wheel-base of the engine as much as possible. The distance between the driving-wheels is 2.40 m. (7 ft. 10.46 in.), and the distance between the centre of forward driver and centre of truck is 3 m. (9 ft. 10 in.)

COMPOUND LOCOMOTIVE—VON BORRIES SYSTEM—HANOVER RAILROAD (GERMANY).

The illustrations represent a form of compound engine invented by Mr. Von Borries, the Mechanical Engineer of the Hanover State Railroad. The engine illustrated is intended for passenger traffic, but many freight and local traffic-engines on this system of compounding are running in different parts of Germany with excellent results, saving from 14.3 to 21 per cent. of fuel, as compared with ordinary locomotives engaged in the same services. These amounts are taken from the official figures according to which the engineers' and firemens' premiums for coal saving are calculated.

The first compound locomotive on the Von Borries system went into operation in 1880, and 18 were in operation on the Hanoverian railroads in 1885, with, it is said, entire satisfaction, while several have been built since.

The engine illustrated differs from the freight-

engines in having the cylinders set further back—undoubtedly avoiding, as claimed by Mr. Von Borries, much of the swaying and pitching caused by the excessive overhang of the usual German engine, which has the cylinders entirely in front of the leading wheels. On the other hand, there will be noted as unfavorable features the long steam- and exhaust-pipes exposed to refrigeration, which must be particularly injurious with the high pressure carried (170 lbs.).

The compounding is effected by the use of two cylinders acting on cranks at right angles to one another. The high-pressure cylinder exhausts into a receiver placed underneath the boiler barrel, and the low-pressure cylinder takes its supply of steam from this receiver. The passages connecting the cylinders and the receiver are clearly shown in the plan and cross-section of the engine.

When working compound the steam is only admitted to one cylinder, and as, with this arrangement, the engine might often stick on the centres and be unable to start, an arrangement is made by which, at starting, some steam can be admitted direct to the low-pressure cylinder, so that the engine can start readily, even if the high-pressure crank is on a dead centre. This valve closes automatically when the engine has taken one or two strokes.

The starting-valve is placed in the passage between the receiver and the low-pressure cylinder, but is not shown in the general views of the engine, but is, however, shown in detail. The arrows show the direction in which the exhaust steam flows from the high- to the low-pressure cylinder when the engine is working compound. The spindle *D* can be operated from the cab by the engineer.

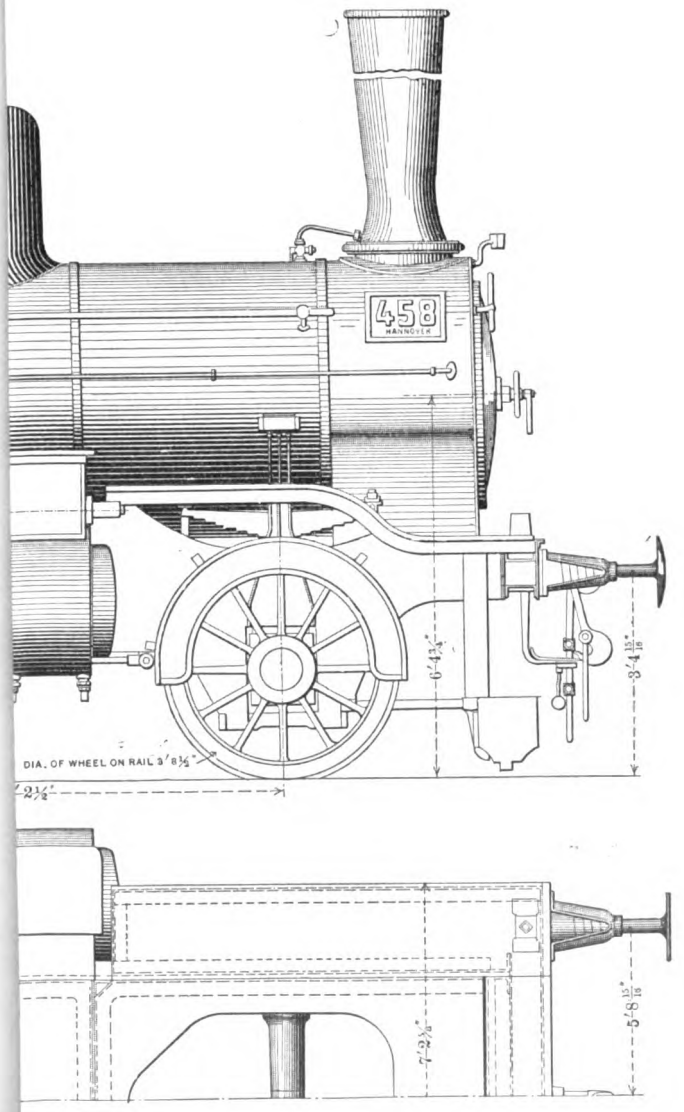

[*To face page* 316.

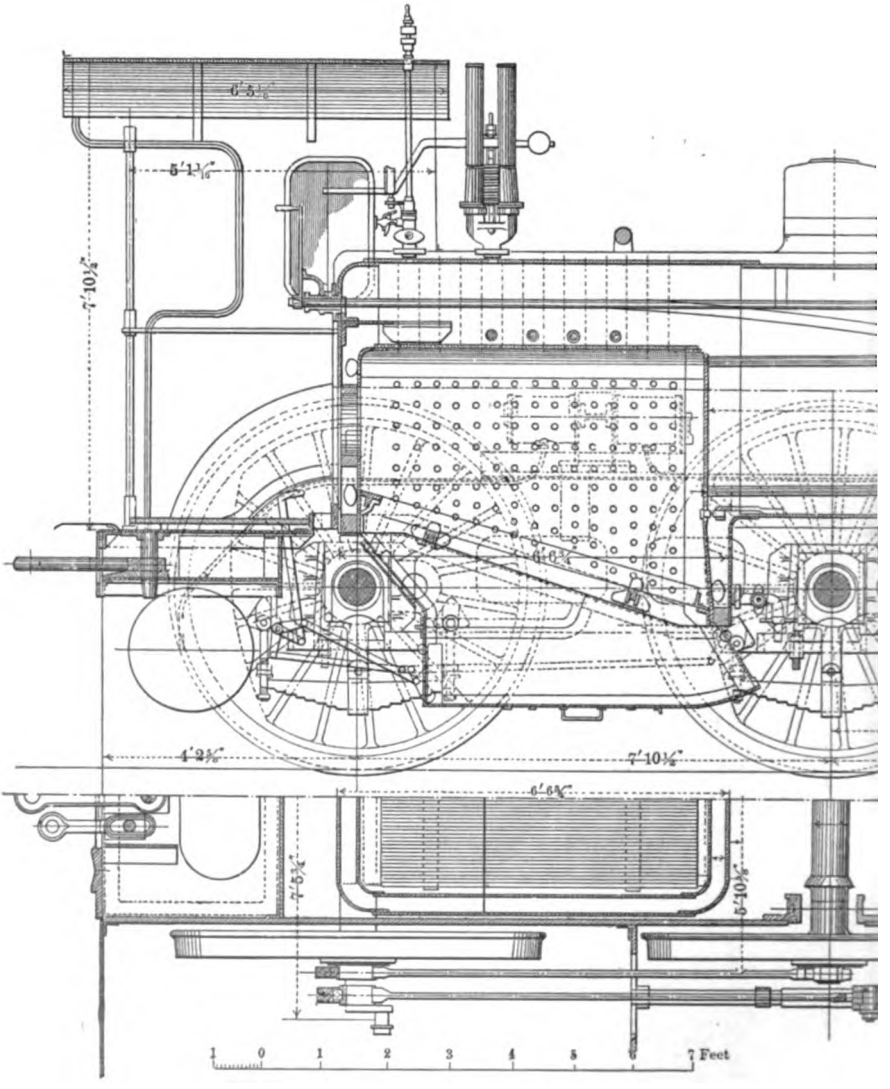

FIG. 168.—Compound Locomotive

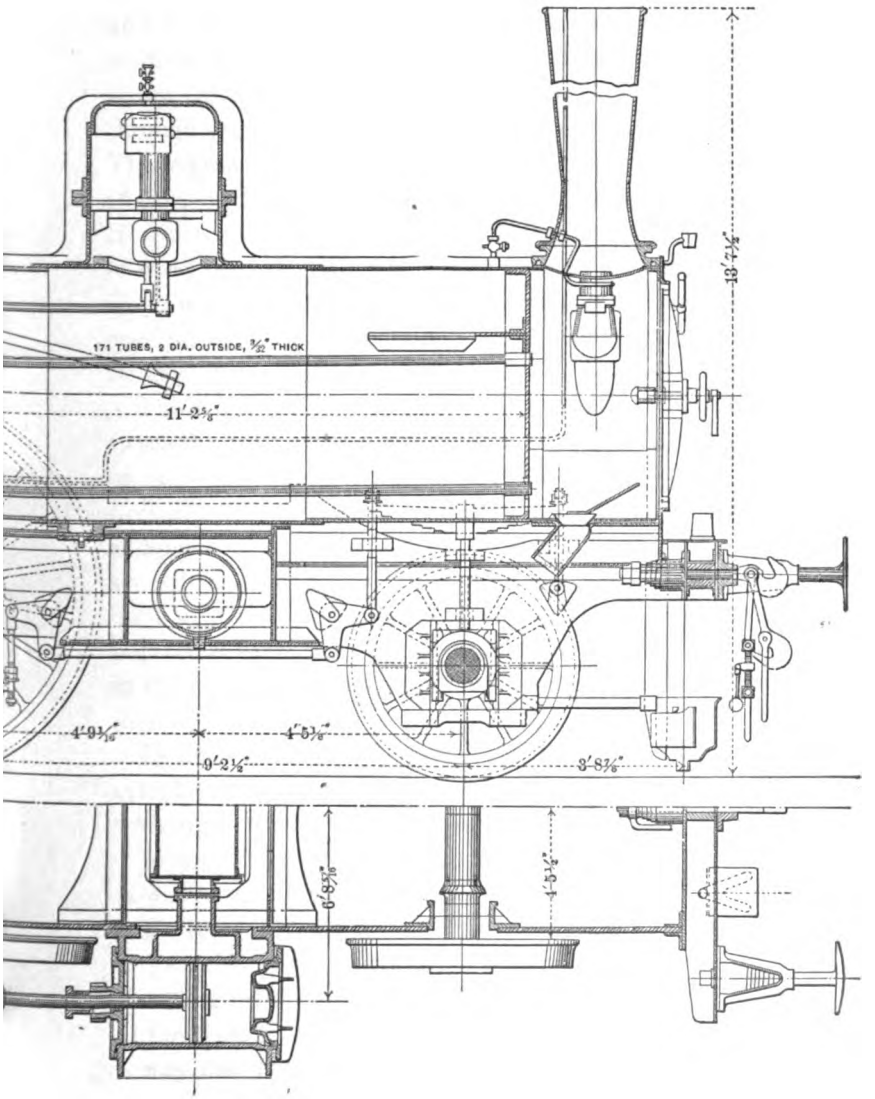

Hanover Railroad, Germany.

[*To face page* 317.

A valve *A* placed in the passage between the receiver and the low-pressure cylinder is closed, as shown, before starting the engine. The closing of the valve allows steam from the boiler to enter the low-pressure cylinder through the opening *B* and a recess in the valve-spindle. The engine thus starts as an ordinary double-cylinder engine, the high-pressure cylinder exhausting into the closed receiver until the pressure therein becomes sufficient to open the valve *A* against the pressure of steam behind it. The valve *C* then closes the opening *B* and the engine goes on working compound. A flap-valve may be substituted instead of the valve *A*.

The receiver of the locomotive illustrated is placed between the two cylinders, and the intercepting-valve is placed on the side, where the receiver is connected to the low-pressure valve-chest; it is, however, a more desirable arrangement to construct the receiver in the form of an arched pipe round the interior of the smoke-box, as is done by Mr. Webb, in order to superheat the steam passing through it. An arrangement of this kind is employed in the case of the compound freight-engines on the same line.

In the engine illustrated the ratio of areas of the two cylinders is 1 to 2, which does not give each piston an equal working power. With ordinary valve motion a ratio of 1 to 2.25 or 1 to 2.3 is required in order to divide the power equally between the cylinders.

However, by taking these latter proportions, a rather awkward-sized low-pressure cylinder is obtained, and, therefore, Mr. Von Borries has adopted a ratio of 1 to 2; at the same time, he has altered the reversing-gear in such a way that both cylinders, nevertheless, develop approxi-

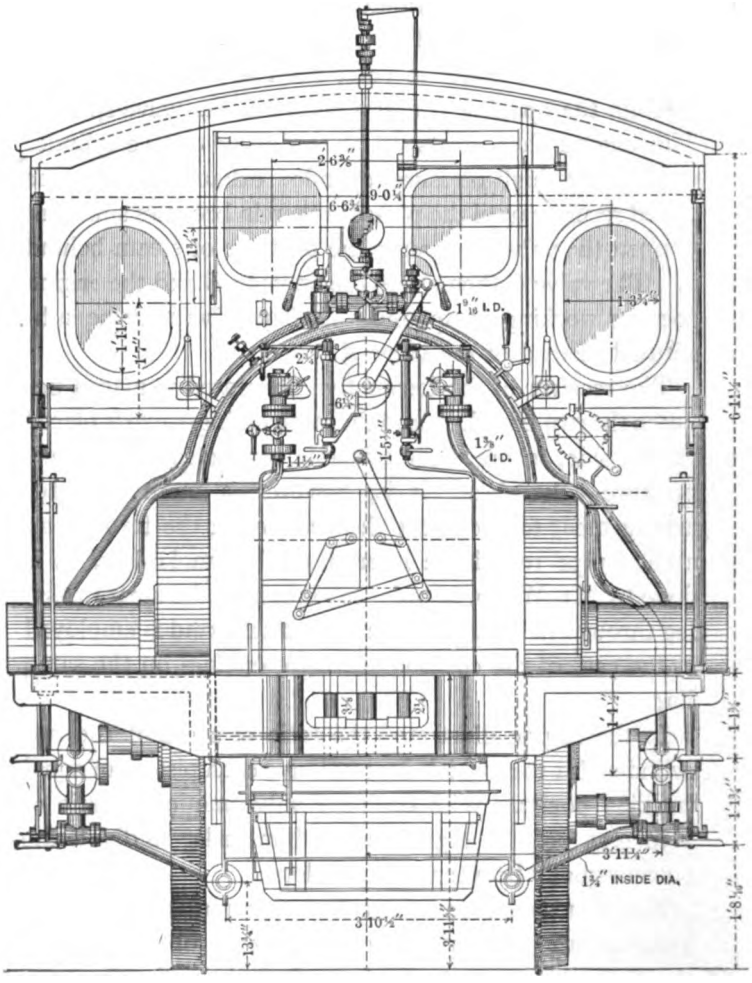

Fig. 169.—Compound Locomotive. Hanover Railroad, Germany.

mately the same powers.* The alteration consists in certain changes in levers of the reversing-shaft (see annexed cut); the levers are of equal length and keyed to the reversing shaft at different angles, and the corresponding suspension links are of different lengths. This is the only change made with the usual arrangement of valve-gears; as the reversing-arm is notched up toward the centre of quadrant, the lever attached to the low-pressure link moves through a smaller vertical distance than the lever attached to the high-pressure link. It is, therefore, evident that the block in the low-pressure link is not so much raised as the block in the high-pressure link. The latter will, therefore, cut off earlier than the low-pressure; when the reversing-lever is notched up, although in full gear, the valve-gears for both cylinders cut off practically at the same point. The corresponding degrees of admission are as follows:

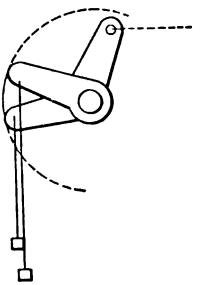

FIG. 169*a*.

High-pressure cylinder.	Low-pressure cylinder.
0.75	0.75
0.50	0.50
0.30	0.33

When reverse lever is pulled over to the backward position, the low-pressure valve cuts off earlier than the high pressure, because the elevation of the two levers is, of course, changed to the contrary position. This is, however, of no consequence, as engines of this class only run tender first when being used for shunting purposes at stations, etc., which can be done by an admission of 0.75 without any disadvantage.

* Cut applies to Allan valve-gear. Various means are used with other forms of gear to produce the same results.

In order to avoid excessive "drop" or back pressure, the cut-off in the low-pressure cylinders should bear a fixed relation to the ratio of the area of the cylinder.* In this case, the ratio being 1 to 2, the cut-off should be about ½. Mr. Von Borries attempts to meet this requirement by so arranging the lifting-arms of his weigh-shaft that the cut-off in the low-pressure cylinder shall not vary as much as the cut-off in the high-pressure cylinder.

The express-engine, as illustrated, is fitted with gear of the Heusinger von Waldegg type, which is so largely used in Belgium, but called there "Walschaert gear." Of course it does not matter what kind of gear is adopted for these compound locomotives. For each type a small alteration, according to the arrangement described above, will effect a suitable admission to the two cylinders. Even if Joy's valve motion be used, only a slight alteration is required for that purpose. The boiler pressure employed in Mr. Von Borries' engines is 170.7 lbs. per square inch.

Most of the principal dimensions of the engines will be found on the illustrations, and further particulars are given below.

The details of the engine are generally in accordance with Prussian standards, but a greater length was given to the axle-journals in order to diminish wear.

HIGH-PRESSURE CYLINDER.

	Feet.	Inches.
Diameter		16½
Stroke		22⅞
Centres of cylinders	6	8¾
Centre line of cylinder to valve face	1	4⅞
Outside lap of slide-valve		1 5/16
Inside " " "		0 5/16
Lead " " "		0 3/32

* An explanation of the cause of "drop," etc., will be found in the enlarged edition of *Recent Locomotives*, p. 103.

LOW-PRESSURE CYLINDER.

	Feet.	Inches.
Diameter		$23\frac{5}{8}$
Stroke		$22\frac{7}{8}$
Centre line of cylinder to valve face	1	$4\frac{7}{8}$
Outside lap of slide-valve		$1\frac{5}{16}$
Inside " " "		none
Lead " " "		$0\frac{3}{32}$

TRACTIVE-FORCE.

Per pound average pressure in cylinder, starting	127.5 lbs.
" " " " " " running	85 lbs.

HEATING-SURFACE.

Fire-box	78.50 sq. ft.
Tubes	969.29 sq. ft.
Total	1,047.79 sq. ft.
Fire-grate area	18.73 sq. ft.
Pressure of steam	170.7 lbs. per sq. in.

WEIGHTS.

Weight of engine, empty	76,112 lbs.
" " " in working order leading wheels	26,432 lbs.
" " " in " " trailing "	28,672 lbs.
" " " in " " driving "	28,672 lbs.
Total	83,776 lbs.

It will be noticed that the tractive power of the engine when working compound is considerably less than is usual in express-engines of similar weight here. The tractive power at the moment of starting is high; but, as this power cannot exist after the receiver is full of exhaust steam at a high pressure, the engine cannot exert any great tractive pull for any distance. Therefore, any heavy incline must be mounted with the engine working compound. When the engine is working compound in the full-gear notch, the equivalent total degree of expansion

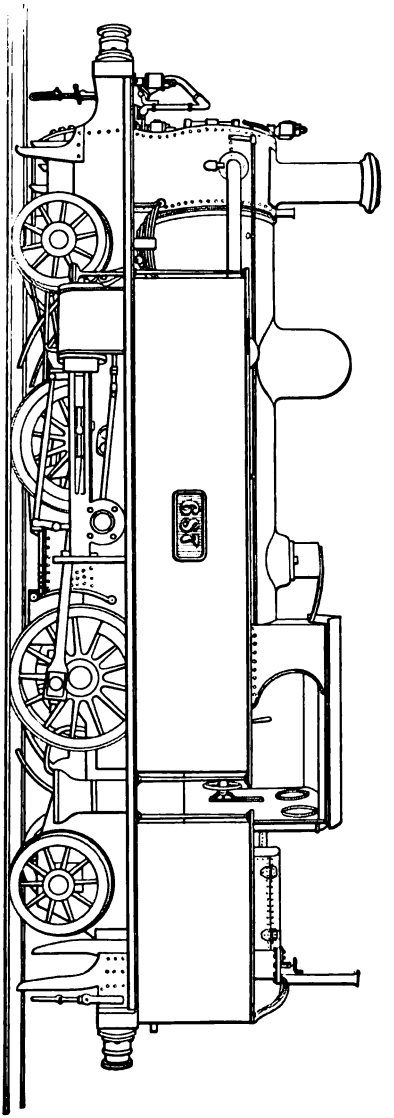

FIG. 170.—Webb Three-cylinder Compound Locomotive.

is about 1 : 2.7, equivalent to a cut-off in a simple engine of about 37 per cent. With the high boiler pressure used it is possible that even with this comparatively considerable degree of expansion, an average pressure of 100 lbs. per sq. in. might be obtained in the cylinders. The gross maximum tractive power of the engine, therefore, when working compound would be

$$85 \times 100 = 8500 \text{ lbs.}$$

WEBB THREE-CYLINDER COMPOUND.

These locomotives are used on the London and Northwestern Railway, and have three cylinders, two high-pressure and one low-pressure. The two high-pressure cylinders are on the outside of frame and back of pony truck. The high-pressure cylinders are connected to back pair of driving-wheels, and the low-pressure cylinder is connected to the front pair of driving-wheels. The axle of this pair is a crank-axle. There are no side-rods connecting the two pair of driving-wheels. The low-pressure cylinder is placed under the smoke-arch and ahead of the truck and attached to the frame. The frame is of the flat or slab type, with an inner frame between front end and fire-box, the forward pair of driving-boxes fitting over these frames, the frame being cut out to receive the boxes. The high-pressure cylinders are bolted to the outer frame. The fire-box is dropped between the two axles. The guides are bolted to the cylinders and to a yoke attached to the frames. The Joy valve-motion is used to operate the valves for both the high- and low-pressure cylinders. The motions are independent of each other, having a screw adjustment for

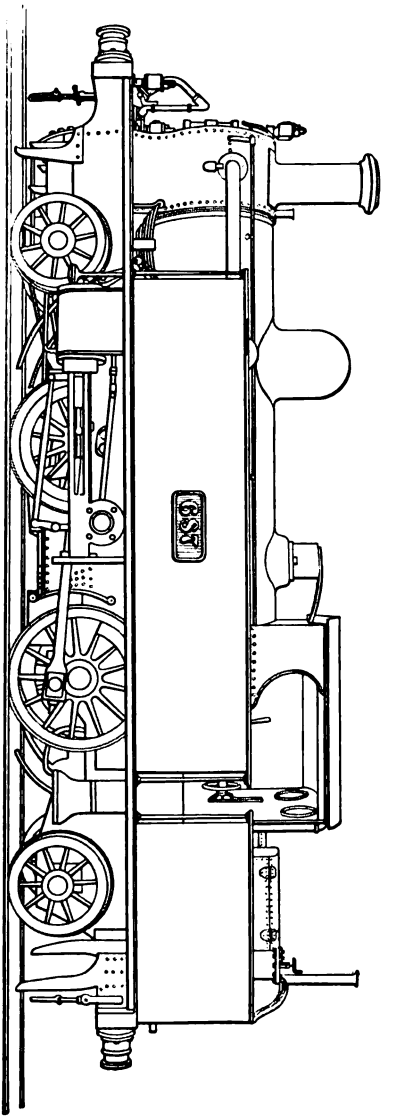

FIG. 170.—Webb Three-cylinder Compound Locomotive.

reversing-lever and the usual lever for the low-pressure valve; using this motion no eccentrics are required. The motion is taken from the main-rod.

The steam-piping is as follows: The high-pressure steam or branch pipes connect to the tee or bulkhead in the front end, pass around and out of the front end back between the two frames and connect to the high-pressure steam-chest of each cylinder. The exhaust-pipe extends from each high-pressure cylinder between the frames and connects to an arched pipe, of which there are two, one for each exhaust. These pipes form receivers and are connected to the low-pressure steam-chest. Under this construction the exhaust-steam from the high-pressure cylinders can be superheated to a certain extent. The exhaust-pipe of the low-pressure cylinder is attached to each side of the low-pressure exhaust and combines at the top to form an exhaust-nozzle. A relief-valve is placed in the receiver-pipe to relieve an excessive pressure in the low-pressure cylinder. In starting these locomotives, when the throttle is opened steam enters the high-pressure cylinders and causes them to revolve the back pair of drivers, and if the tractive effort is not sufficient to move the train this pair of drivers will slip and thus supply steam to the low-pressure cylinder, which will now add its power to that of the high-pressure cylinder and move the train. Under this principle wheels of different diameter could be used on the same engine. Fig. 170 shows one of these locomotives, built for suburban traffic, equipped with side-tanks and extended frame carrying the cab and water-tender, with a trailing truck under tender. The diagram (Fig. 171) shows the general con-

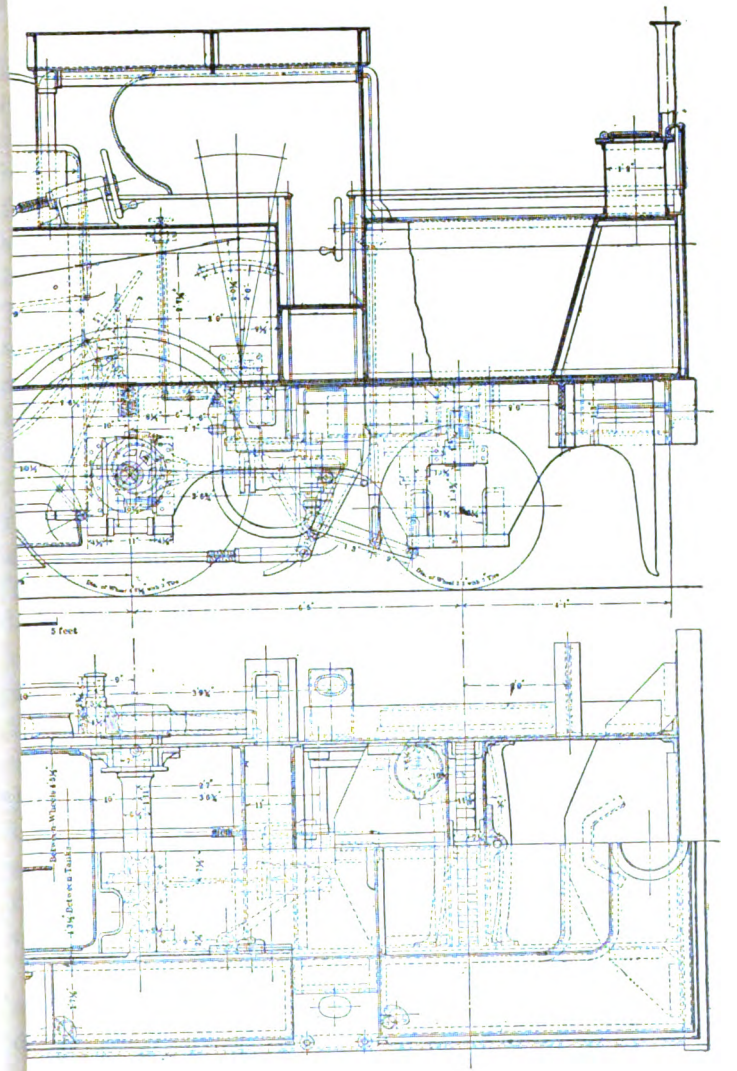

[To face page 324

struction clearly. The principles involved are the same in express and freight locomotives.

The radial truck has an axle, and in a frame extending across the frame having a radius or curve, this axle is placed between driving-frames of the same radius which are attached to the main frames. Suitable retarding springs are placed between the axle-boxes and main frame to keep the truck central with the main frame. The valve-motion for the low-pressure cylinder has a shaft, in centre of which is the link, which has curved slots. This link is capable of being moved either way from a vertical position or rotated by the shaft; a block slides up and down in this link. Attached to this sliding-block is a lever to which is connected the valve-rod at a point above the pin in the sliding-block. The lower end of the lever is attached to an intermediate lever driven by the main-rod to which it is connected at one end. To the other end of this lever is a radius rod pivoted to a fixed joint. The lever connected to the sliding-block and intermediate lever acts as the operating and lap and lead lever, and the lead opening is regulated by the position or point at which the lower end of operating lever is attached to the intermediate lever. The centre lines of this motion are clearly outlined in Fig. 171. The operation of the Joy gear (see Fig. 172) is as follows: Starting from the back centre, the crank travelling upward will also move upward and forward, driving the sliding-block up in the curved link. This being set for the forward motion, the upper end of the link will be inclined forward.

Movement of the blocks drives the valve forward; on covering the back steam-port the opening movement of the valve, being controlled by the inclination of the link

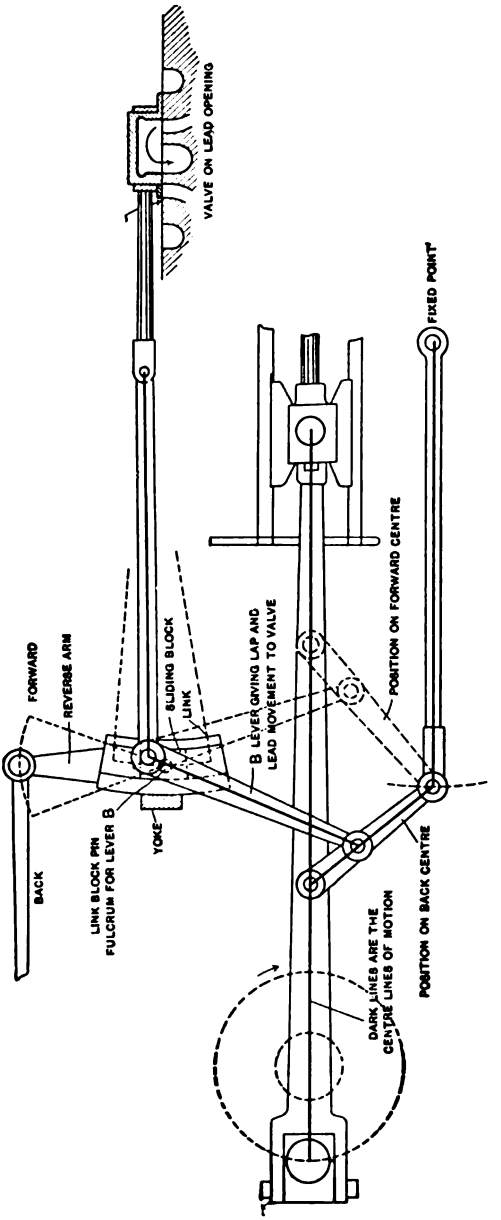
VALVE ON LEAD OPENING
FIXED POINT
FORWARD
REVERSE ARM
SLIDING BLOCK
LINK
B LEVER GIVING LAP AND LEAD MOVEMENT TO VALVE
POSITION ON FORWARD CENTRE
BACK
LINK BLOCK PIN FULCRUM FOR LEVER B
YOKE
POSITION ON BACK CENTRE
DARK LINES ARE THE CENTRE LINES OF MOTION

FIG. 172.

and the lap and lead lever, after the crank-pin leaves the quarter, the main-rod pulls the sliding-block down towards the centre of the link, and with the assistance of the lap and lead lever closes the valve to back port. The sliding-block now being in the middle of the link, the piston-head in the forward end of the cylinder or on the forward centre, the lap and lead lever has moved the valve sufficiently to uncover the front port, the amount of lead opening, without this action of the lap and lead lever with this motion when the crank was on centre the valve would be in the centre of its travel with all ports closed. Upon further movement of crank-pin, from forward centre downward and backward, the sliding-block is drawn down on the link and back of the vertical line, opening the front and back ports, returning to the centre position when the crank-pin comes to the back centre. In the forward motion the top portion of the link is thrown forward and in the backward motion the top of the link is thrown backward from the vertical position. This motion gives a constant lead opening for all points of cut-off. The links for the high-pressure engines are in the form of a disk with curved slots in which the blocks slide. The whole as a disk is held in a cylindrical frame which forms the axis upon which the link is rotated, a lever being attached to the disk. These links are placed on top of the H.P. guide-bars.

TWO-CYLINDER COMPOUND LOCOMOTIVE, NORTHEASTERN RAILWAY, ENGLAND.

Fig. 173 is a two-cylinder compound engine, built on the Worsdell von Borries system. This locomotive has a single pair of drivers and is inside-connected, that is, having a crank-axle and with the cylinders between the frames under the smoke-arch. The peculiar arrangement of the high- and the low-pressure cylinder is due to the large diameter of the low-pressure cylinder as shown in Fig. 175; the one is above the other. The two cylinders are cast in one piece· also the steam-chest for each cylinder. A peculiarity is the position of the steam-chest and valves, which are at the sides and extend outside of the frames. Fig. 175 shows an elevation and cross-section of cylinders, steam-chest, and exhaust-pipe of the low-pressure cylinder. The high-pressure steam-pipe passes through the left side of the smoke-box to the high-pressure steam-chest, the exhaust-pipe from the high-pressure cylinder to the low-pressure steam-chest forming a receiver-pipe on the right-hand side. In the receiver is an intercepting-valve.

The construction of this valve is shown in detail in Fig. 174, which is a plan and elevation of the valve. The intercepting-valve is a flap-valve and closes the receiver to the low-pressure steam-chest. This valve swings on a shaft which extends to the outside of the smoke-box, to which is attached a lever. The position of the valve in drawing is open. On the outside of the smoke-box is a cylinder which contains the starting-valve; also a piston head and rod. This piston-rod extends out to the lever on the intercepting-valve. The starting-valve is a double

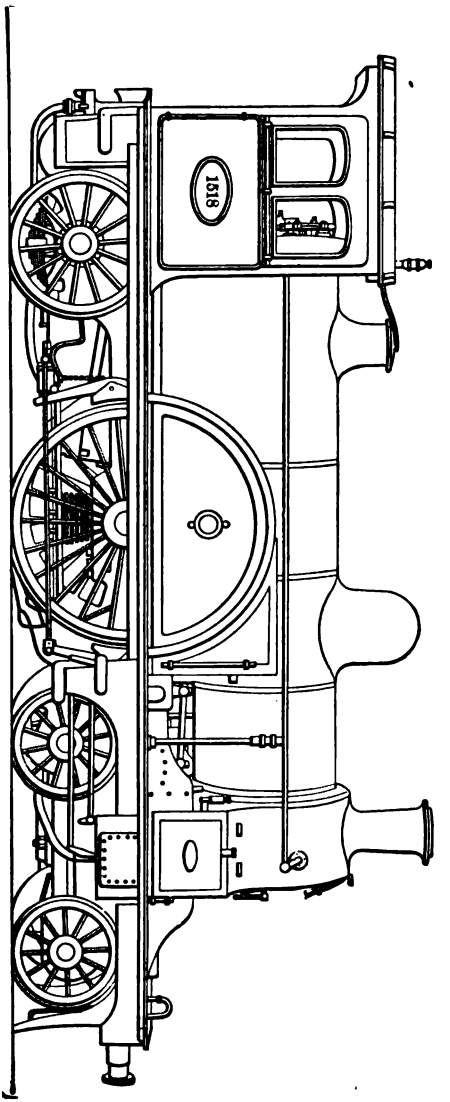

FIG. 173.—Two-cylinder Compound, Northeastern Railway, England.

valve, or a valve within a valve. These valves are actuated by a rod connected to a lever in the cab. The inner valve seats and covers a small port leading to the chamber containing the piston-head, and the increase of movement of the lever in the cab opens the larger valve, permitting steam to enter the port. Attached to the chamber

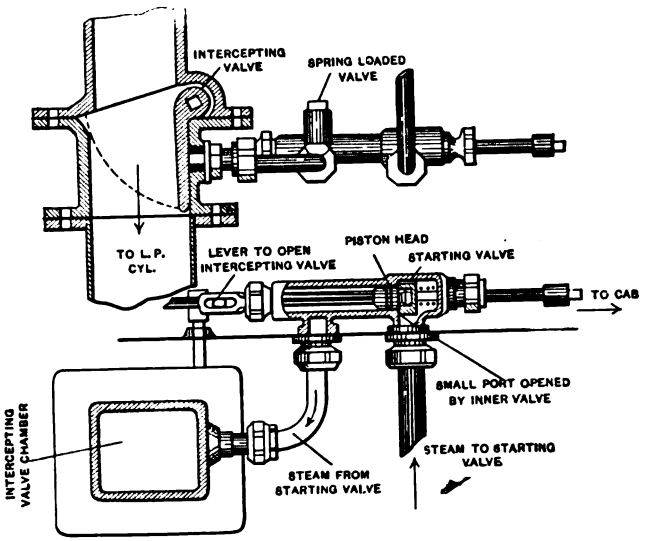

FIG. 174.—Intercepting-valve Mechanism.

containing the piston-head is a valve-chamber containing a spring-loaded valve closing a small port leading from the chamber containing the piston-head to the pipe leading to receiver back of intercepting-valve. A pipe for live steam is tapped from the live-steam pipe of the high-pressure cylinder and is connected to the starting-valve chamber as shown. Fig. 175 shows clearly the position of the intercepting-valve, the exhaust-ports, and

the passages of each cylinder with valves. The operation of the intercepting-valve is as follows: In starting the locomotive the flap-valve is closed against its seat by the engineer operating the lever in the cab. This action causes the starting-valve to be opened, admitting steam in front of the small piston-head. This forces the rod forward, closing the intercepting-valve against the exhaust from the high-pressure cylinder. In the meantime the steam from the starting-valve opens the spring-loaded valve, admitting live steam from the boiler to the low-pressure cylinder. After the engine has started and the receiver pressure becomes great enough above the intercepting-valve, that valve is caused to open and at the same time drive the small piston-head back in the chamber, cutting off live steam to the low-pressure cylinder from the boiler. The engine is then operating as a compound engine.

GENERAL DIMENSIONS.

The boiler is of steel, the barrel 51 inches in diameter and 10 feet 7 inches long. The fire-box is of copper, 6 feet $3\frac{1}{2}$ inches long, 3 feet $2\frac{3}{4}$ inches wide, 6 feet $3\frac{1}{2}$ inches deep at the front end and 5 feet $3\frac{1}{2}$ inches at rear end. There are 203 brass tubes $1\frac{3}{4}$ inches in diameter and 10 feet 11 inches long. The heating-surface of the fire-box is 123 square feet, that of the tubes 1016 square feet, making a total of 1139 square feet. The boiler is built to carry 200 pounds pressure. The driving-wheels are 7 feet $7\frac{1}{4}$ inches and the trailing-wheels 4 feet $7\frac{1}{4}$ inches in diameter. The engine-truck wheels are cast steel with steel tires. The truck-axles have bearing 6×9 inches, trailing-axles 7×11 inches; crank-axle of steel

with journals 8×9 inches. Crank-bearings are 8¼ inches in diameter and 5 inches long. The high-pressure cylin-

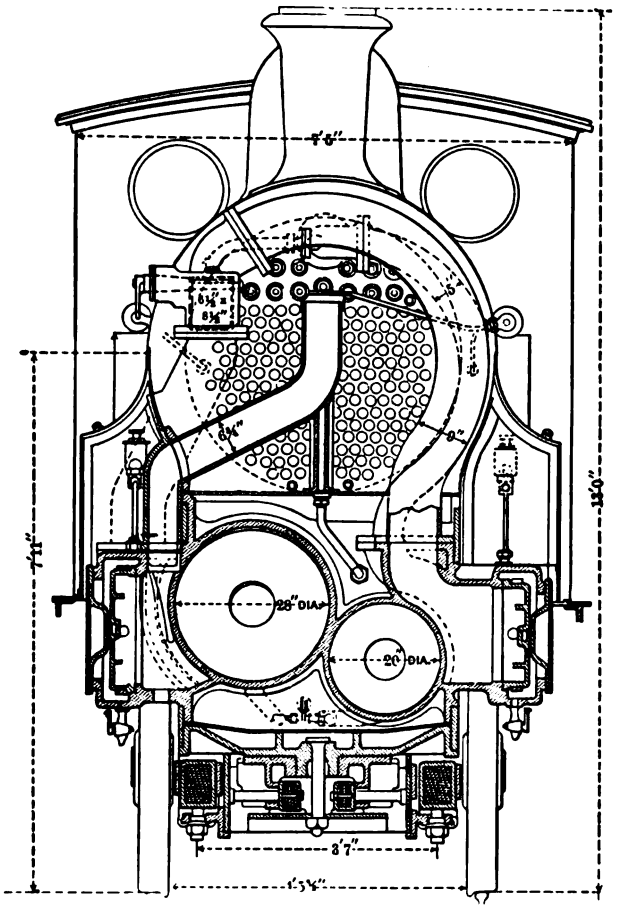

FIG. 175.—Elevation and Cross-section of Two-cylinder Compound.

der is 20 inches and the low-pressure cylinder 28 inches in diameter, both 24-inch stroke. Steam-ports for high-

pressure cylinder are $1\frac{3}{4} \times 17$ inches long. Exhaust-ports, $3\frac{1}{2} \times 17$ inches. The low-pressure steam-ports are 2×20 inches and the exhaust-ports $3\frac{1}{2} \times 20$ inches. The Joy gear is used. The valve for the high-pressure cylinder has a $1\frac{1}{8}$-inch lap, $\frac{1}{8}$ inch inside clearance, $\frac{3}{16}$ inch lead, and $4\frac{3}{8}$ inches maximum travel. The low-pressure valve has the same lap, inside clearance and lead, and $5\frac{3}{4}$ inches maximum travel. The piston-rods are $3\frac{1}{2}$ inches in diameter, connecting-rods 6 feet 1 inch between centres. Total weight of engine in working order is 104,550 pounds, 35,670 pounds on the truck, 39,760 pounds on the driving-wheels, and 29,120 pounds on the trailing-wheels. The truck-wheels are 6 feet 6 inches between centres. The distance between truck to centre of driving-wheel is 10 feet, centre of driving-wheel to centre of trailing-wheel, 8 feet 8 inches, total length of engine 28 feet 8 inches. The tender carries 3940 gallons of water and 4 tons of coal. The performance of these engines is stated to be as follows: A run was made between New Castle and Berwick with 32 empty coaches, a distance of 67 miles; total weight of train, 270 tons. The running time was 78 minutes. The consumption of coal averages 26.4 pounds per mile. A speed of 90 miles has been attained per hour with 18 English coaches.

STANDARD TYPES OF FOREIGN LOCOMOTIVES.

In the sketch of the development of the compound locomotive in foreign countries given in a previous chapter the illustrations, which were made at the time these engines were tried, show the successive stages of improvement. It will be seen that the various types depicted follow the general outlines of foreign locomotives.

In the development of the compound locomotive up to the present period the general principles of compounding have been retained, the improvements have been along the line of increased boiler capacity, raising the centre of gravity, and the adoption of the engine trucks and trail-wheel, the use of outside connected cylinders and drivers to a certain extent and abandoning of the single drivers. While the inside connected crank-axle is still a standard, the general outline of the cab has remained, the absence of appliances on the boiler, the low foot-board, and having no pilot makes a contrast between American and foreign locomotives. It will be seen that the question of compounding has been thoroughly tried and all the methods possible with various cylinder combinations have been used. Means for starting and changing from high pressure to compound have been used in foreign-built engines. The locomotives in Figs. 176 to 179 represent the latest development and outline of European locomotives. Fig. 176 is a photograph of the Du Bousquet de Glehn type of compound used on the Nord

and Paris Orleans Railways of France. This is a four-coupled four-cylinder compound using crank-axles for

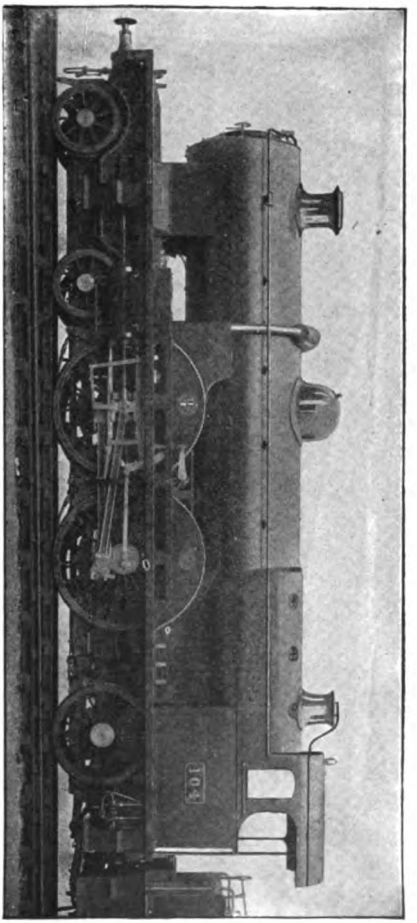

Courtesy of Cassier's Magazine.

FIG. 176.—Du Bousquet de Glehn Compound Locomotive, France.

the front pair of drivers, the outline follows the Atlantic type using engine trucks with a trail-wheel under the fire-box, the boiler is of the Belpaire type, the centre

of gravity being high in order to clear the driving-wheels the diameter of driving-wheels is 6 feet 8 inches. The low-pressure cylinders are between the frames and in the saddles beneath the smoke-box or front end, and are connected to the crank-axle of front pair of drivers; the high-pressure cylinders are on the outside of frames and close to the front pair of driving-wheels, and are connected with the back pair of driving-wheels. The Walschaert valve-gear is used. Steam for high-pressure cylinders is brought from the boiler by an outside steam-pipe which passes down each side of the boiler, the high-pressure cylinders are 14 inches diameter × 25½ inche, stroke, the low-pressure cylinders are 23 inches diameter × 25½ inches stroke. These engines have attained a speed of 90.2 miles. On test up a rising grade of 1–200 ft., a speed 62.1 was continuously maintained for 13 miles with over 300 tons behind tender.

It will be seen that this locomotive in its construction resembles the four-cylinder engine used on the same lines and previously described and shown in Fig. 155, except that the driving-wheels in the latter engine are ahead of the fire-box and a trail-wheel used. The position of cylinders and connecting-rods is clearly shown in Fig. 175 as for both engines, also the steam-pipe, and its connections to dry pipe in steam dome, and the high-pressure cylinders. Fig. 177 is the latest type of English locomotive using outside cylinders, engines, trucks, and trail-wheel, or the Atlantic type driving-wheels are 6 feet 7 inches in diameter, cylinders, 18½ inches diameter, 26 inches stroke, single expansion, four-drivers coupled, London, Brighton & South Coast Railway.

Fig. 178 is a four-wheel coupled inside and connected,

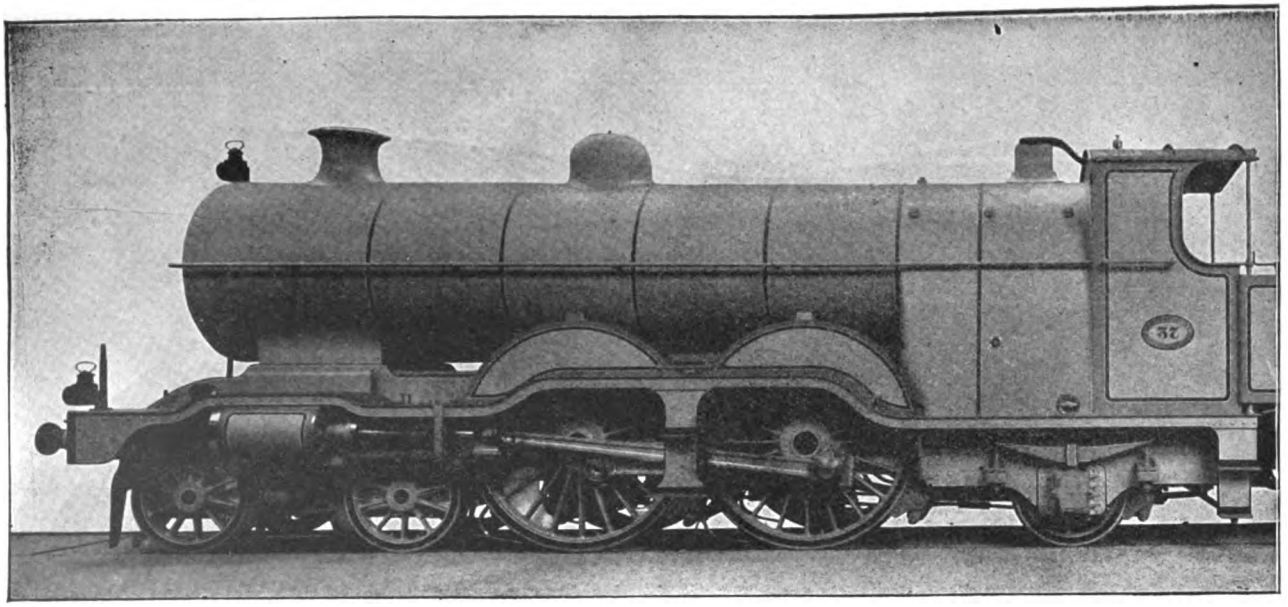

Courtesy of Cassier's Magazine.

FIG. 177.—Atlantic Type of English Locomotive.

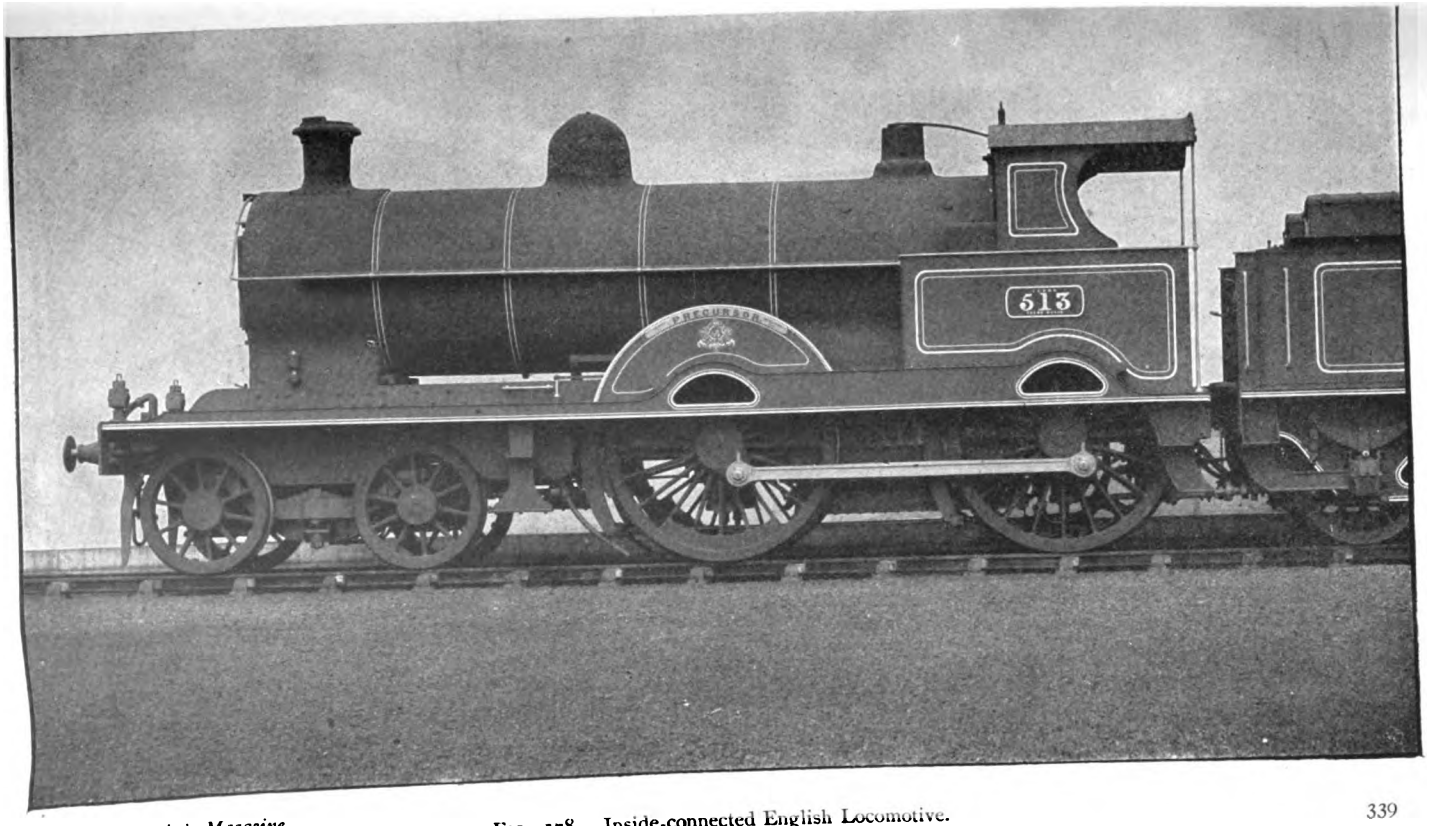

Courtesy of Cassier's Magazine.

FIG. 178.—Inside-connected English Locomotive.

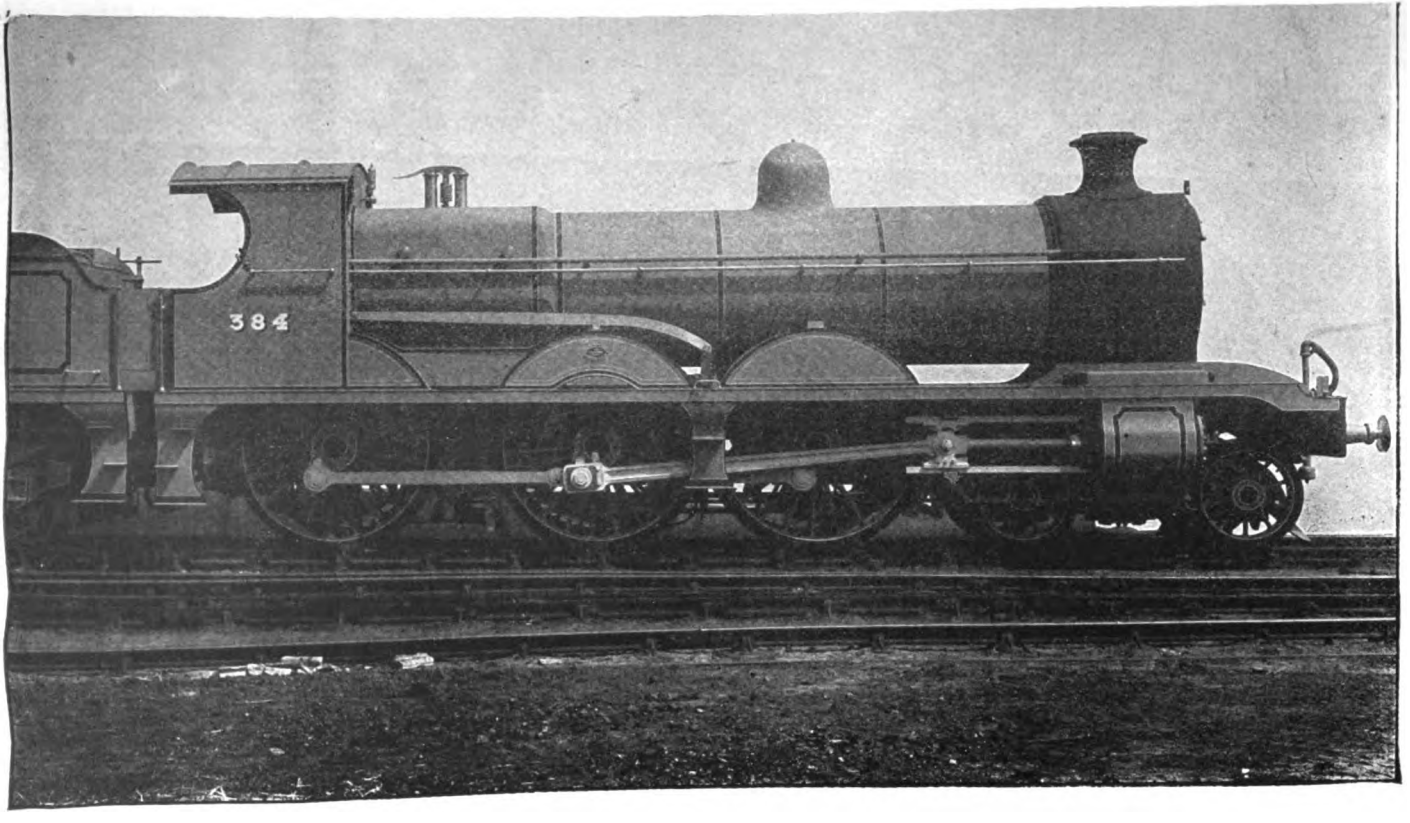

Courtesy of Cassier's Magazine

FIG. 179.—Six-coupled Outside-connected English Locomotive.

using crank-axle diameter drivers, 6 feet 9 inches cylinder, 19 inches diameter×26-inch stroke, London & Northwestern Railway. Fig. 179 is a six-coupled outside-connected locomotive, having four-wheeled engine truck, driving-wheel 6 feet 9 inches in diameter, cylinders 20 inches diameter, 26-inch stroke, used on the Glasgow & Southwestern Railway.

CHAPTER XIV.

SUPERHEATERS AS APPLIED TO LOCOMOTIVES.

In Fig. 180 is shown a superheater as applied to a locomotive. The purpose of the superheater is to increase the efficiency of the engine by increasing the power in the cylinders through reduction of cylinder condensation, thereby increasing the elasticity of the steam; thus shorter cut-off and smaller volume of steam are required for a given horse-power. This means an increase in boiler capacity. When the surplus heat in the steam, or the superheat, is sufficient it reheats the cylinder walls and maintains the temperature necessary, preventing cylinder condensation and the loss during expansion. With superheated steam great care must be given to lubrication. The increased temperature and dryness of the steam requires that the oil be of the very best, of high test, and fed uniformly into the steam-chest, cylinders, and packings.

The superheater illustrated is the Cole type, and one type is constructed as follows: A number of 3-inch tubes are placed in the barrel of the boiler above the standard tubes, which they displace, and extend from fire-box to front end. In these tubes are placed the superheater tubes. The superheater proper has a header divided

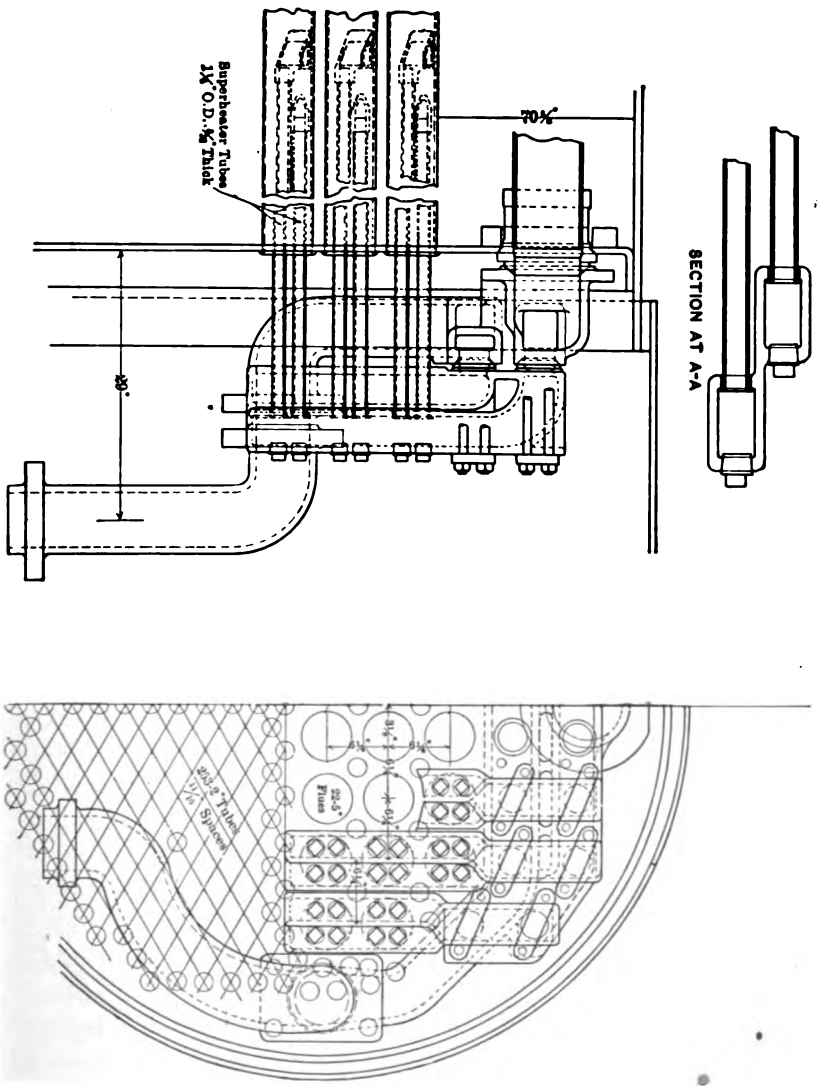

FIG. 180.—New Type of Cole Superheater.

into two compartments. This header is in the smoke-box on front end, and is attached to the steam-pipe. The header contains two sets of tubes, one $1\frac{3}{4}$ inches and the other $1\frac{1}{8}$ inches in diameter. The tubes having a diameter of $1\frac{3}{4}$ inches are fitted into the compartment next to the flue-sheet and project into the 3-inch flues. The $1\frac{1}{8}$-inch tubes are fastened to the header and extend through it into the $1\frac{3}{4}$-inch tubes. The outer compartment of the header is open to the dry pipe or tee, while the inner compartment is connected to the branch or steam-pipes to cylinders. The tubes of the heater are held to the top of the 3-inch tubes. The header has plugs opposite each tube by which small tubes can be inserted or taken out.

The operation is as follows: When the throttle is opened steam from the steam-pipes passes into the outer compartment of the header, through the small tubes into the large tubes of the heater, back into the inner compartment of the header, and from there into branch pipes and to cylinders. In its passage through the tubes of the superheater the steam comes in contact wth heat from the fire-box which passes through the 3-inch tubes, thereby adding heat to the saturated steam from the boiler. When the throttle is closed the heat is prevented from flowing through the 3-inch tubes by closing a damper in the front end, the header being encased and the damper being attached thereto. This is not shown in the cut.

A superheater must be free to expand; and in this construction this condition is met, as the heater is fixed at one end only and the other end is free to move in the 3-inch tubes, thereby throwing no strain on the device. The type shown in Fig. 180 is constructed somewhat

differently from the first engine built after the Cole design. The usual large fire-tubes are provided as formerly. The headers in this type are vertical and connected to horizontal cross-headers, which in turn are attached, one set to the steam- or dry-pipe in the smoke-box, and the other horizontal header to the steam-pipes leading to the steam-passage in the saddle. The vertical headers attached to the dry-pipe extend down in front of and beyond the large fire-tubes, which are 5 ins. in diameter. This header covers about one-half of the diameter of the fire-tubes. The header attached to the steam-pipes and the horizontal header lie between the header attached to the dry-pipe and the fire-tubes, and cover the other half of the fire-tube, as shown in Fig. 180. This does not mean that they are in direct contact with the fire-tubes, but as seen from an end view. The openings in the horizontal headers are directly one above the other, and the vertical headers are attached and made steam-tight by ball-joints, which allows for expansion and any movement due to expansion, as shown in Fig. 180. There are four superheater-tubes extending into the large fire-tubes; one end of these superheater-tubes is expanded into the vertical header attached to the dry-pipe, and the proper name for this header is the saturated-steam header. The other end of the tube is expanded into the header attached to the steam-pipes and is the superheated-steam header. There are two complete superheater-tubes per large tube, or four single tubes which are $1\frac{1}{4}$ in. in diameter outside. There are plugs in front of each tube in the headers for the purpose of examining tubes and providing a way to expand the same into the header. The tubes are joined by

a return bend into which they are fastened at the far end or next to the fire-box. Fig. 180 is a cross-section at *AA* showing the relation of the saturated- and superheated-steam headers to each other and the position of the tubes. The operation is as follows: When the throttle is opened, steam flows from the dry-pipe into the horizontal header, thence into the vertical saturated-steam headers, from there into the superheater-tubes, back to the extreme end and return into the superheated-steam headers and then into the steam-pipes and so to the cylinders; the saturated steam being superheated in passing through superheater-tubes and in contact with the hot gases passing through the large fire-tubes. The locomotive illustrated having this heater installed, has a superheating surface of 764 square feet (Fig. 181).

SCHMIDT SUPERHEATER.

This superheater is applied to a locomotive in the same manner as the one just described. It originated in Germany and has been applied in that and other countries. The header or steam-collector is also divided into compartments. The opening for the heater tubes is on the bottom, or face down. The usual tubes in the upper portion of the tube-sheet are displaced by larger tubes $4\frac{5}{8}$ inches diameter, the number depending on circumstances. As an example in practice, the header is connected to the dry pipe in front and forms the tee pipe of usual construction. This header is divided into two compartments: one into which the steam passes from the boiler, and the other from which the steam passes into the branch pipes to cylinders. As will be seen by

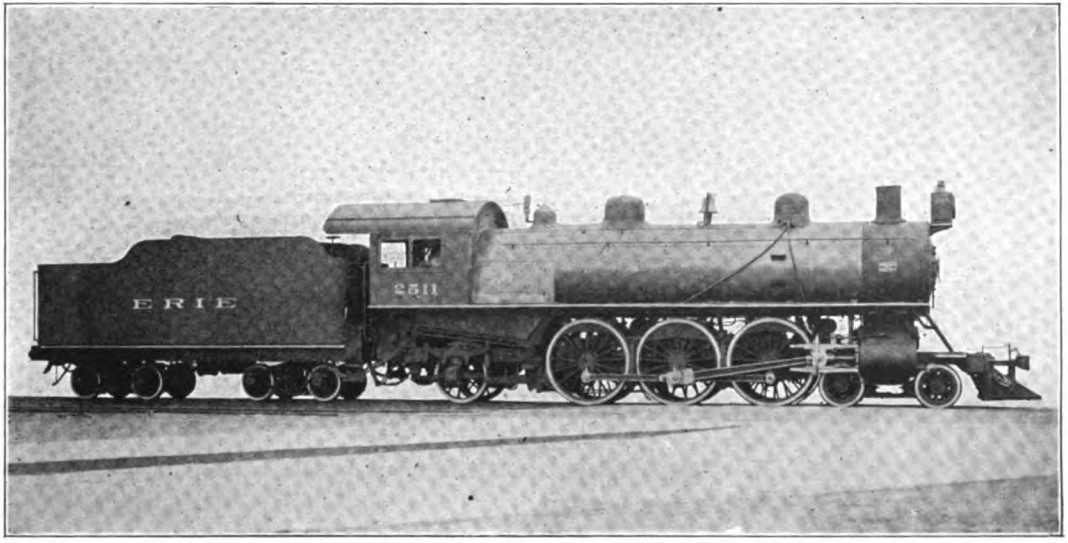

FIG. 181.—Equipped with Cole's Superheater.

Cylinders: Diameter, 22½ inches; stroke, 26 inches. Driving-wheels, 74 inches. Boiler: Diameter, 75 inches; pressure, 200 pounds superheating surface, 764 square feet. Total weight, in working order, of engine, 230,500 pounds.

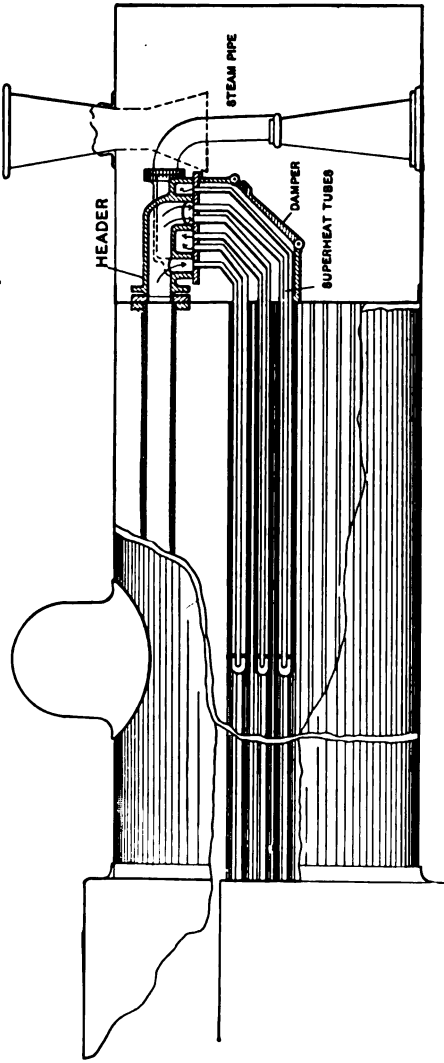

FIG. 182.—Schmidt Superheater.

the vertical cross-section, there are six small tubes, U-shaped, which project into the large tube towards the fire-box. One end of each tube is connected to each compartment in the header. There are two openings

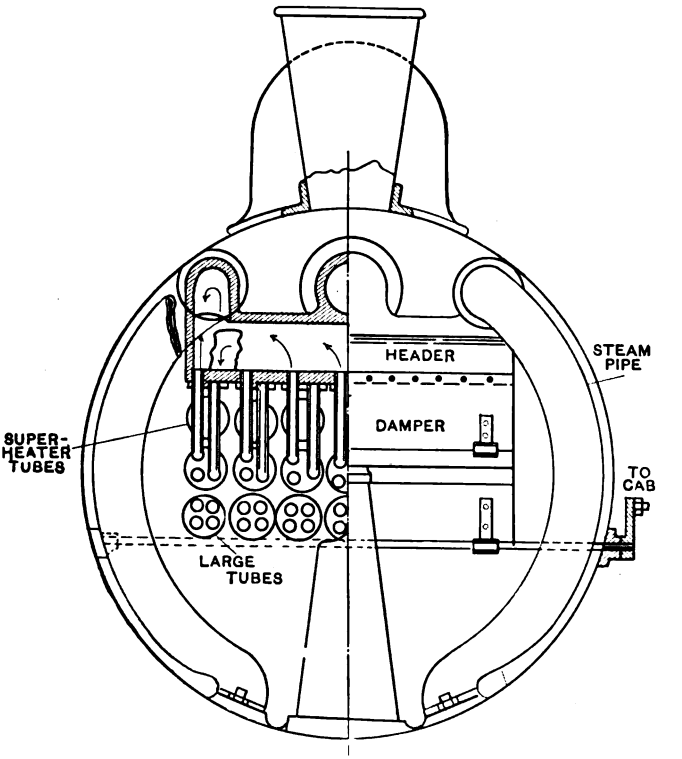

FIG. 183.—Elevation and Cross-section of Schmidt Superheater.

from the dry pipe into the header, and two openings to the compartment to which the branch pipes are attached. There are two pairs of superheating tubes to each larger tube. The tubes are enclosed, and in the front of the

tubes a damper is provided which can be opened or closed, and in this system is generally attached to the throttle-lever so that it is opened and closed simultaneously with the throttle. This prevents the hot gases passing through and around the superheater tubes when steam is not flowing through them.

Fig. 182 is a longitudinal cross-section showing header and superheater tubes, branch pipes, and course of steam through superheater. The arrows show the steam from the boiler passing into one end of the superheater tubes, also passing from tubes into the other compartment to the branch pipes. The heater tubes are different from those of the Cole heater. The difference consists in that they are one continuous tube, while the Cole has a tube within a tube. The superheater tubes leaving the header are bent into an easy curve to enter large tubes. Fig. 183 is a vertical section showing a front view of the superheater.

The operation is as follows: When the throttle is open the steam flows into the dry pipe, from there into the steam-collector or header, through the superheater tubes, into the other compartments of the header to branch pipes and cylinders, the gases from the fire-box passing through the large fire-tubes and around the superheater tubes, superheating the steam while the throttle is open.

CHAPTER XV.

THE READING'S SINGLE-DRIVER LOCOMOTIVE—FOR THE ROYAL BLUE TRAINS.

THIS engine's drivers are equalized with the trailing-wheels by a nice system of underhung springs. This makes her, in service, something similar to an eight-wheeler, so far as the track is concerned.

Ample journal-bearings make the engine run cool; the driving-box and that on the trailing-wheel are each 12 inches long.

The dome is placed over the fire-box and behind the cab; this is unusual, but gives room in the cab, allows the men to see, and prevents the surge of water ahead at stops from entering the dry pipe to injectors, etc. Three 4-inch pops are used—two on the left side of the dome and one on the right; one of these is set to pop at 195 pounds pressure, one at 198, and the third at 200; when steam is suddenly shut off, that $8\frac{1}{2} \times 9$ foot fire makes all three pops sing at once.

The cab is wonderfully comfortable; being in the centre of the boiler, there is little vibration, and each side is roomy. The throttle is an innovation; the stem coming, as it does, from the dome in the rear of the cab, shoves in instead of pulling out, and has a long stem running in brackets on top of the boiler. The lever is the regulation Baldwin ratchet, but on the stem, between the brackets, there is a stiff-coiled spring, which is adjusted by a hand-nut; the tension of this spring tends to open the throttle, and can be so adjusted that the engineer can handle his valve easily without jerking. On the stem outside of the first

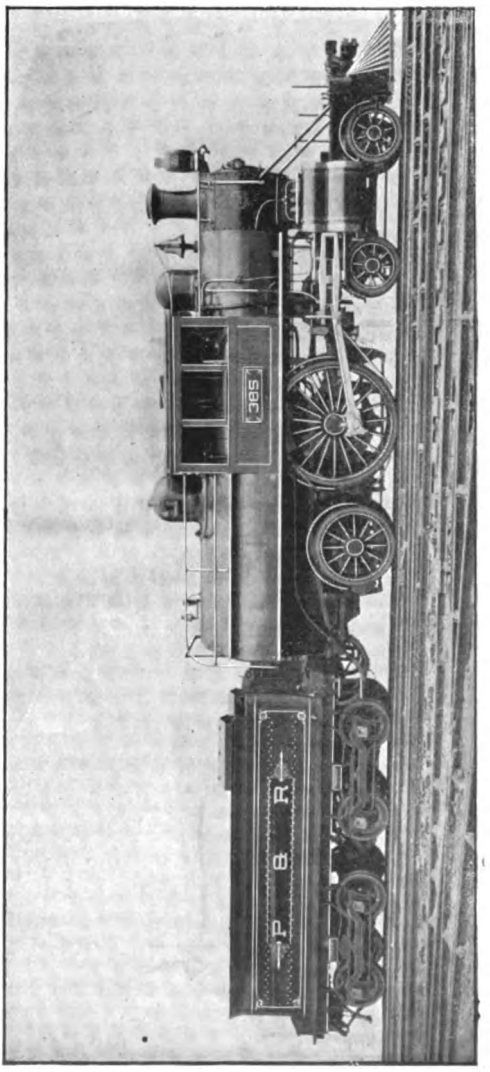

Photo Furnished by B. L. Wks. Baldwin Locomotive Works Builders.

FIG. 184.—PHILADELPHIA & READING R. R. CO.'S SINGLE-DRIVER LOCOMOTIVE.

bracket a coarse-pitch thread is cut, and a heavy, knurled brass nut is placed; when the engineer leaves his engine, he can quickly run this nut up to the bracket and lock the throttle shut. There are sand-boxes in the back of the cab to use for backing up, provided, as the regular box is, with Leach air sand-jets.

The tires are secured on the drivers by retaining-rings; but an improvement over the Mansell pattern is that they are lipped into the wheel centre as well as the tire, the rivets merely holding the ring in place.

The engine and tender are painted royal blue and gold-leafed to match the trains hauled, and look very handsome.

Gould couplers and passenger platform-buffers are used on the engine both forward and back.

Both injectors are on the right side, the blower can be worked from either side of the cab or from the fire-box deck, and there is a steam-gauge and light on the rear of fire-box for the benefit of the fireman.

The driver and trailing-wheel brake-shoes are on the rear of the wheel, which plan gives a splendid chance to get all the brake apparatus in in nice shape; the push-cylinders are located just back of the guides; the levers are straight, stand vertical, and are fulcrummed in the plate-bracket shown just ahead of the driver.

There is no reach-rod on engines with cab located as this one is; the tumbling-shaft arm is simply extended up to form a reverse-lever.

She is a Vauclain compound, and when working the hardest at speed makes less noise at the exhaust than the injectors do.

She has a short smoke-arch, with a vertical netting and a variable exhaust-nozzle. The Wootten fire-box has a brick bridge-wall at the combustion-chamber.

The following are the general dimensions of this locomotive:

Gauge of track, 4 ft. 8½ in.

Cylinders, 13 in. H. P., 22 in. L. P., by 26-in. stroke.

Driver, 84¼ in. diameter, cast steel.

Total wheel-base, 22 ft. 9 in.

Rigid wheel-base, 7 ft.

Wheel-base, engine and tender, 50 ft.

Weight, in working order, 115,000 lbs.

Weight on drivers, 48,000 lbs.

Weight on trailer, 28,000 lbs.

Weight on truck, 39,000 lbs.

Limit of height, 14 ft. 3 in.

Limit of width, 9 ft. 3½ in.

Boiler, Wootten; shell, 56 in. diameter at arch, straight, made of ⅝-in. steel; longitudinal seams butt-jointed; circumferential seams, double-riveted; working pressure, 200 lbs. per square inch; dome over fire-box.

Three hundred and twenty-four tubes, 1½ in. diameter, 13 W. G., and 10 ft. 3 in. long.

Fire-box, 114 in. long by 96 in. wide; side, back, and crown sheets, ⅜ in.; flue-sheet, ½ in. thick; water-space, 3½ in.

Crown supported by crown bars of inverted T irons, set 2½ in. above sheet; stay-bolts, 1⅛ in. diameter spaced 4 in. between centres.

Water-tube grates and bars.

Engine-truck, rigid, centre-bearing; 36-in. wrought-

iron Vauclain wheels, steel-tired; journals, $5\frac{1}{2} \times 10$ in.; trailing-wheels, $54\frac{1}{4}$ in., cast steel; journals, 7×12 in.

The valves are $11\frac{1}{2}$ in. diameter, piston pattern; drivers (2), $84\frac{1}{4}$ in. diameter outside tires; centres, 78 in.; tires, $3\frac{1}{8}$ in. thick, 6 in. wide; journals, $8\frac{1}{2} \times 12$ in.; Sellers' "'87" injectors, No. $10\frac{1}{2}$; Westinghouse brake on drivers, trailer, tender, and train; $9\frac{1}{2}$-in. pump, air-signal, Leach sanders, and U. S. metallic packing.

The boiler is lagged with magnesia blocks, and all the trim is bright iron.

The tender has a water capacity of 3500 gallons, frame of 8-in. channel iron; fitted with water-scoop; Boies wrought-iron centre steel-tired wheels; journals, $4\frac{1}{2} \times 8$ in.

THE 1895 CLASS "L" EXPRESS ENGINES FOR THE PENNSYLVANIA R. R.

The engraving shows the general appearance of these engines. They are fine-looking and fine-working locomotives.

Particular attention has been paid to getting them handy and comfortable to the men in the cab. The steam- and air-gauges are on a bracket on the corner of the Belpaire fire-box, and facing the engineer, who is seated at the corner; the engineer's valve is just below them, and the reverse-lever ahead of the runner, on the side of the boiler. The throttle-stem enters the head and a lever is carried up to top of boiler, which is actuated by a crank on a shaft; this shaft runs to the engineer's side of the boiler, and the throttle-lever is

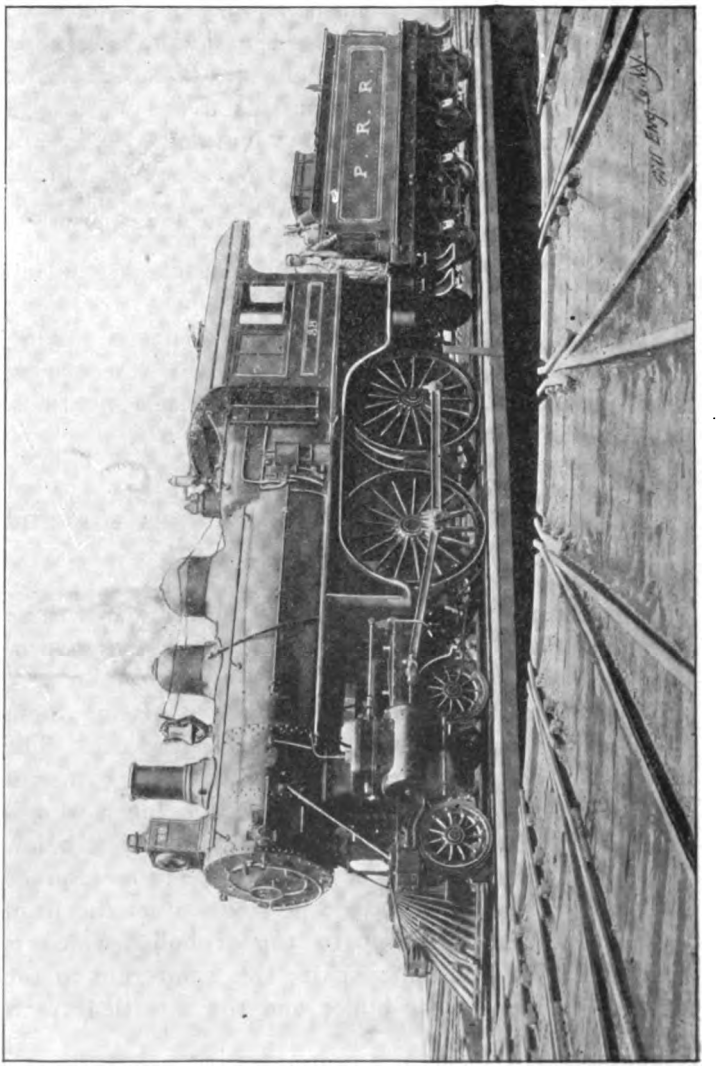

FIG. 185.—CLASS "L" EXPRESS LOCOMOTIVE, PENNSYLVANIA R. R., 1895.

keyed to it; this lever hangs straight down along the boiler side, and the end is turned out for a handle, having a ratchet-latch. Everything is within easy reach of the runner. The lubricator is on the left side, and the feed must be looked after by the fireman.

The boiler has a 62-inch ring at the smoke-box, then a course that is a frustum of a cone, enlarging to 68 inches; back of that there is a straight 68-inch course, carrying the dome, and behind that a Belpaire fire-box. This is 60 inches wide at the rear and across the entire top, the sides being rounded out in front to the size of the shell, and this bulge runs out to the flat at the rear; this gives more room at the rear in the cab.

The fire-box is 120 inches long and 41½ inches wide, fitted for anthracite coal. There are 210 flues 1⅞ inches diameter.

The cylinders are 18½ × 26 inches; the valves have a 6-inch travel, 1¼-inch lap outside, and ¼-inch clearance inside. The ports are 20 inches long, 1⅝ inches wide. The drivers are 80 inches diameter, of cast steel.

A Dean cross-head is used, but made of two pieces instead of three.

The links, hangers, etc., have forged cups where ordinary oil-holes are generally used.

The jacket is steel, painted black, and adds much to the "business" appearance of the engines.

They have sand-boxes on top of the boiler.

The smoke-box door has inside hinges on a swinging link, and is bolted up tight all around outside.

The pistons are fastened into cross-head by a split nut, the end of piston being shaped like an axle, the nut surrounding it and forcing it into cross-head.

There are no back-boards in the cab; it is open, like an eight-wheeler, and the men can see and converse with each other.

Good steps and hand-holds are used; inside checks and branch pipes fastened against the boiler.

These engines carry 180 pounds of steam-pressure.

To the bottom of the piston-heads of these engines is attached a carrier or shoe. These piston-heads are very light, being of the single-web dish type of steel. In order to have a perfect-fitting, steam-tight, smooth-working piston-head, the snap-ring packing is used; and to break the joint and prevent any leakage of steam through the opening of the rings the Peacock break-joint is used, which has been tested under severe usage. The reciprocating parts of these engines were reduced to the lightest weight possible. As shown, the main and side rods are channeled, making them very light and strong. Brakes are provided on the engine-trucks. A very good feature is that good steps are on the engine and tender. The outlines of these engines are very pleasing to the eye, and the centre of gravity is high. Taking all into consideration, these engines are a leading example of the modern steam locomotive in appearance, construction, and operation.*

* Single-expansion type.

MODERN FRENCH LOCOMOTIVE. (Fig. 186.)

The locomotives described in former chapters were American-built. It will be proper to give a description of a foreign engine in order to have a comparison and to show how master mechanics differ in their ideas of locomotive construction, although conditions of traffic and country through which the engine operates may often have something to do with the type and outline. The locomotive shown involves ideas which are not in use in America. The purpose has been to reduce the wind resistance when running by placing deflectors in front of the locomotive; even the cab is pointed. This is supposed to cut through air the same as a ship cuts through the water. The boiler is of the Belpaire pattern common in the United States. An unusually large steam-dome is provided, and placed well forward on the boiler. The throttle-valve is worked from the side by a shaft and lever; to the lever is attached the rod, which extends into the cab. A feature not seen in the American locomotive is outside steam-pipes, which extend from the dome down to the steam-chest on the outside of the boiler. This is open to objections due to radiation and change of temperature. It will be seen that the sand-box is between dome and stack, and the steam-pipe ends and tee are in this box, as with many foreign engines a damper is hinged to the top of the stack. The steam-cylinders are placed between the driver and the rear engine-truck wheel,—differing from American practice, where the cylinders are attached to the front end of boiler smoke-arch, the cylinder and saddle forming one casting. In this engine the cylinder is bolted to the frame, which is of

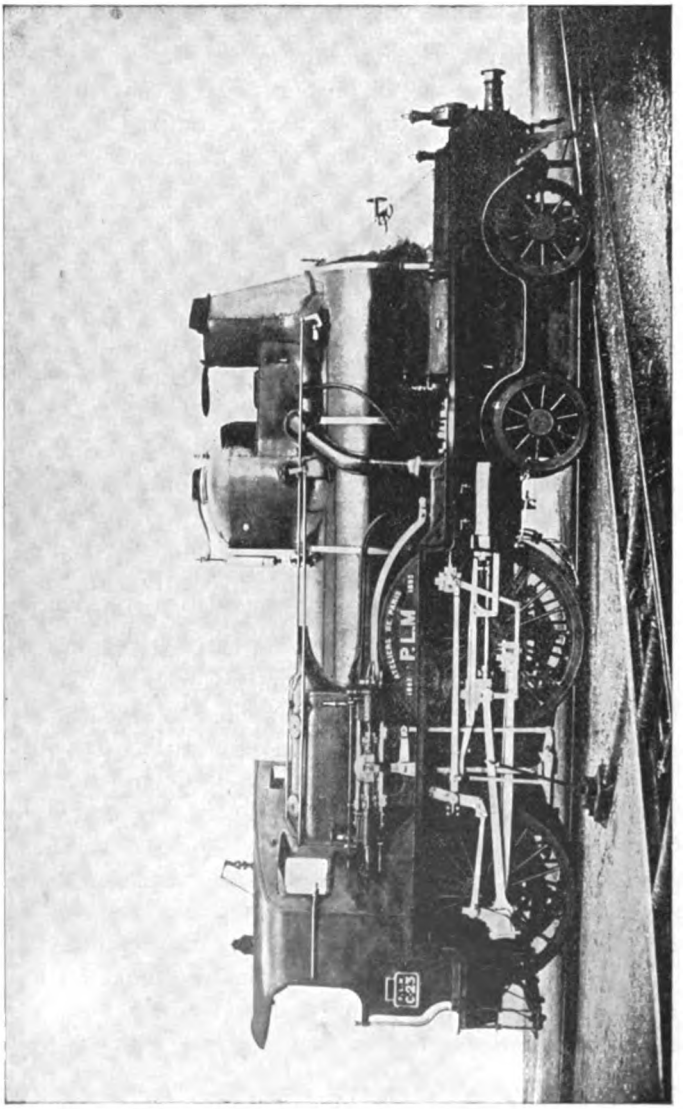

FIG. 186.—MODERN FRENCH LOCOMOTIVE.

the slab type. By placing the cylinders as shown, the tendency to nose around is not as great. The absence of a pilot looks odd to the average American. Life-guards are provided instead, which project downwards towards the track. Sand is placed on the track by a jet. The valve-motion is a point of interest, as it is entirely on the outside and not under the boiler. It is the Walschaert motion. The usual eccentric is missing; instead a small crank is attached to the main crank-pin, which in this engine is on the rear driver. This crank extends from the centre of main crank towards the centre of axle, giving the required throw to cause the valve to travel the proper distance. A rod extending from this crank connects to a stationary link at the bottom. This link is pivoted at the centre, which allows it to swing back and forward each side of the axis. This link does not raise or lower, but the radius-rod is raised and lowered in the link. This link is curved towards the steam-chest, and the radius depends on the length of radius- or valve-rod, which is from the centre of link to the pin at valve-stem cross-head. A block slides in the link to which end of the radius-rod is attached. The radius-rod has attached to it a small cross-head which carries a fulcrum-pin; to this pin is affixed a lever whose lower end is connected to the main cross-head by a link. To the upper end of this lever, which is called the lap-and-lead lever, is connected the valve-stem. The valve will be moved by the crank and link at one time; and when coming to the centre will be under the control of the lap-and-lead lever, and the motion given the valve by the lap-lever will be the width of lap and the lead opening. The position

of the block in the link determines the direction in which the engine will run: when block is above the centre of link it will move forward; when below, it will move backwards. There is no angular advance given to the centre of small crank which drives the motion; consequently the lap-and-lead lever has to be used. In order to reverse the motion a rock-shaft is put below the frame as shown, and a link extends up to the radius-rod, which is moved up and down. The mechanism used to operate the reverse-shaft is somewhat complicated. It is a steam-reverser, having two pistons and cylinders with a yoke attached to the piston-rods; between the two cylinders a bell-crank lever is attached to this yoke. A rack has a toothed wheel meshing with it; this wheel is also attached to the yoke. The purpose of this is to hold the piston in any position. The other end of bell-crank has attached to it the lifting-link to reverse-shaft.

Locomotives having outside connections are not seen very often in the United States, although some of the older ones were built that way. The last one the writer saw was on the Camden and Amboy Railroad, now part of the Pennsylvania Railroad system.

INTERCEPTING-VALVE FOR COMPOUND ENGINES.*

The intercepting-valve for compound engines here illustrated was designed by F. W. Dean of 53 State Street, Boston, Mass. It is in use on engines on the Old Colony Railroad and on the Lehigh Valley. To the upper side of the casing *A* is firmly bolted the secondary casing *B*, provided with the inner pendent tubular hub *B'*, which extends into the chamber of the lower casing and is bored out to form a cylinder having two different diameters, the upper portion being the larger. The upper end of the cylinder is closed by a cap, connected with which is the pipe *D*, the upper part of which is curved and threaded to receive the end of a pipe leading from the interior of the converting valve D^2, as shown in Fig. 187.

The interior of the casing *A* is formed with a valve-seat for the valve *E*, which is provided with a tubular stem whose outer surface closely fits the smaller bore of the hub *B'*. The bore of the stem is fitted to form a steam-tight bearing on the tube *D*, and it extends through the valve, but of somewhat enlarged diameter, and is threaded to receive a plug the upper end of which is somewhat removed from the lower end of the tube *D* when the valve is raised to its highest position, as shown in Fig. 187. On the upper end of the tubular valve-stem is screwed a sleeve-like piston, formed with two grooves to receive metal packing-rings; the stem is also provided with a pair of packing-rings to work in the lower portion of the cylinder *B'*, and has cut

* Iron Age.

through it just below the packing-rings several rectangular or flat-bottomed radial openings, so located relative to the seating face of the valve and the lower end of the pendent tube *D* that the openings will not begin to be uncovered by passing below the lower end of the tube until the valve has descended nearly to its seat and its outer periphery is partially inclosed by the annular raised rib. Surrounding the valve-seat suitable packing-rings make a steam-tight joint between the tube *D* and the valve-stem.

Live steam direct from the boiler is admitted through the pipe *F*, the upper end of which communicates through the tube-sheet with the steam-space of the boiler, as shown in Fig. 188; but instead of the steam having free access to the chamber through an opening of the size of the pipe, the steam is wire-drawn through a very small hole in a plug or bushing, as shown in Fig. 188.

The tube *D* has drilled through it, just below its junction with the cap, a small hole, through which steam may pass from the interior of the tube to the chamber above the piston, to aid in forcing the valve to its seat.

The casing *B* has formed in its upper part a small vent-hole, the lower end of which opens into a groove in the piston when in its highest position, and its upper end communicates with the annular chamber formed in the upper packing-face of the casing *B*. The cap is also provided with a vent-hole extending from the under side of its flange or its packing-face to the interior of the steam passage through the cap and tube, as shown in Fig. 187, whereby any steam leaking from the

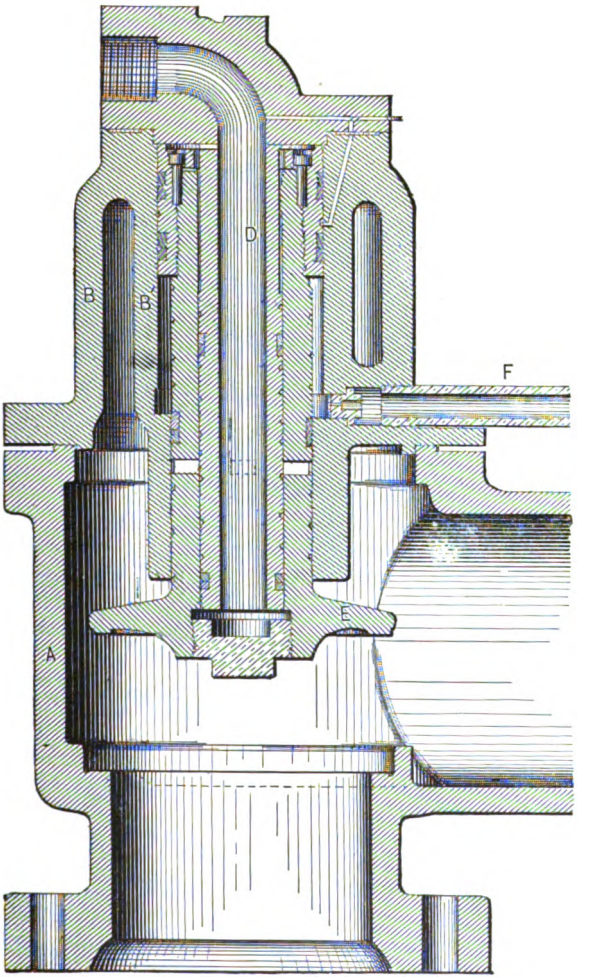

FIG. 187.—F. W. DEAN PATENT INTERCEPTING-VALVE FOR COMPOUND ENGINES. (Central Vertical Section, enlarged.)

chamber and passing the lower packing-rings into the groove can escape into the tube *D*, instead of finding its way past the upper packing-rings into the chamber above the piston.

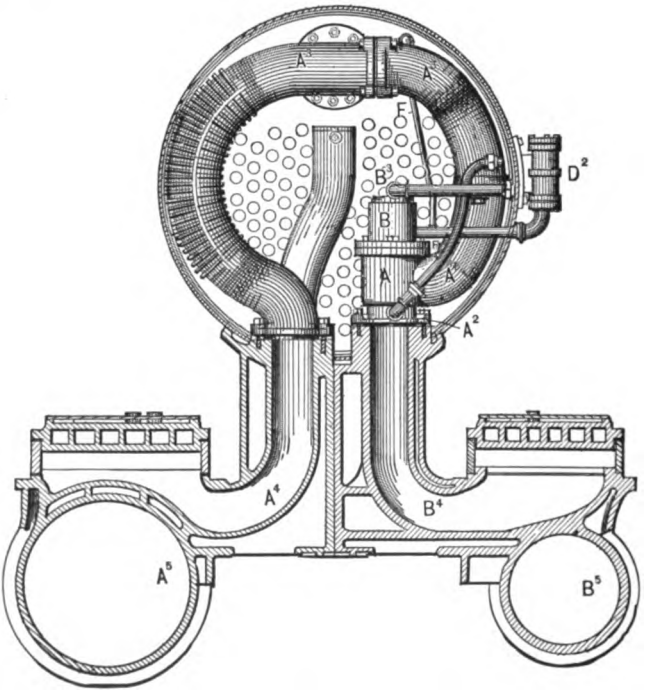

FIG. 188.—F. W. DEAN PATENT INTERCEPTING-VALVE FOR COMPOUND ENGINES. (Transverse Vertical Section through Smoke-box.)

The area of the annular lower end of the piston in the upper chamber *B'* is approximately equal to the area of the lower end of the pipe *D*, so that the pressure of steam in the chamber will nearly counterbalance

the pressure of steam in the pipe tending to move the valve downward, and so maintain the valve in its elevated position until steam enough has passed through the small opening in the upper part of the pipe *D* into the chamber above the piston to overcome the upward pressure in the chamber. The valve then moves downward as fast as the steam can pass through the opening until it has nearly reached its seat, when the openings in the valve-stem will permit the escape of steam from the pipe *D* into the chamber *A*, and the valve will seat without jar.

By admitting the live steam from the boiler to the chamber through the small orifice in the bushing of the pipe *F*, the upward movement of the valve *E*, which is started promptly by the steam in the chamber, which is substantially at boiler-pressure in its continued upward movement, will be somewhat retarded by the restricted supply of steam which can pass through the orifice, and as some steam will remain in the chamber above the piston, which can escape only as fast as it is forced through the orifice into the pipe *D*, the upward movement of the valve will be arrested without slam or jar.

The construction shown and described insures the opening of the valve *E* before the pressure of exhaust-steam in the high-pressure exhaust passage accummlates above the receiver-pressure, and thus relieves the high-pressure piston of the early back-pressure, as the valve being acted upon by the steam in the chamber at substantially boiler-pressure is made to open promptly, when the converting valve is closed and a passage is opened from the interior of the tube *D* to the atmos-

phere, and is also opened in advance of an accumulated back-pressure on the high-pressure piston.

The cap is connected by a pipe with the converting-valve, and as a consequence it follows that when the converting-valve is closed the steam in the tube *D* is free to escape into the open air, and as the converting-valve is closed as soon as the high-pressure cylinder begins to exhaust, it follows that before the pressure of the exhaust can accumulate above receiver-pressure the pressure above the valve *E* will have been relieved and the pressure in the chamber will have commenced to raise the valve *E* to open communication to the receiver.

CHAPTER XVI.

INJECTORS, SAFETY-VALVES, STEAM-GAUGES, ETC.

THE INJECTOR.

THE injector is a part of the locomotive machine that must always be in perfect condition. Any defect in it will prevent it from working, and place an engineer in a very bad position, as on it he must depend to get water into the boiler, for the day of pump-using is past.

There are usually two injectors on a locomotive, so that if one fails the other may be used. The action of the injector seems a mystery to many, in regard to the manner in which the water is forced into the boiler, at or above the steam-pressure which is working it.

The operation is as follows:

Steam under pressure acquires a very high velocity in escaping through a tube. Then the steam passing from the boiler in the steam-nozzle *N*, and having a high velocity, comes in contact with the water in combing-tube *O*, condenses, and also imparts to the water its own velocity. Water being a heavier body and acquiring the velocity of the steam, passes from the combining-tube into the delivery, from there it strikes the check with sufficient force to raise it against the boiler-pressure.

If the steam is not perfectly condensed, the injector will not work, but will spray and cause it to fly off, in most automatic-regulating injectors. In answer to the

question, "Why does it force water against a higher pressure than that which is working it?" we answer: A pressure in motion is working against a pressure at rest, or without motion. The pressure in motion is the steam escaping from steam-nozzle combining with the water imparting to it its velocity. The pressure at rest or without motion is the steam in the boiler into which the water is being forced. The pressure in motion having the greater power (due to the velocity and weight acquired), overcomes the pressure without motion.

The most simple form of the injector is shown in Fig. 189. *N* is a steam-nozzle, which extends into the

FIG. 189a.

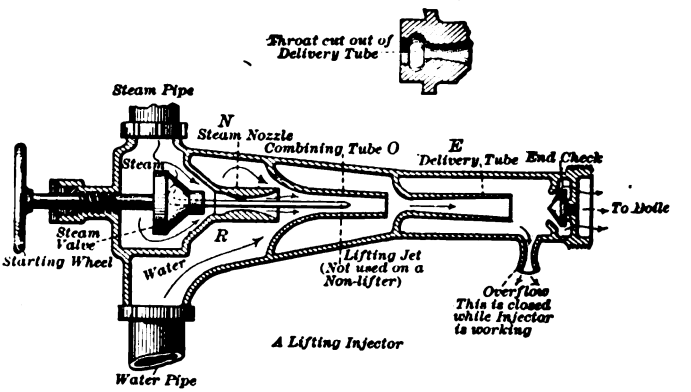

FIG. 189.

tube *O*, which is called the combining-tube. In this tube the steam and water combine, the mouth of the combining-tube being open to the water-chamber *R*. In front of the combining-tube is the delivery-tube *E*. Beyond this is the overflow and end check.

The capacity of an injector is known by the diameter of the smallest tube, which is the delivery-tube. The purpose of the overflow is to allow the steam, which is creating a vacuum, to escape. Also, for the water to acquire a velocity before being forced into the boiler.

A very simple illustration of how an injector operates is shown in Fig. 190. The man is blowing into the

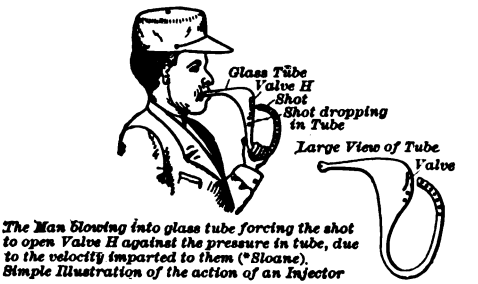
Glass Tube
Valve H
Shot
Shot dropping in Tube
Large View of Tube
Valve
The Man blowing into glass tube forcing the shot to open Valve H against the pressure in tube, due to the velocity imparted to them (*Sloane).
Simple Illustration of the action of an Injector

FIG. 190

tube, which has a valve at *H*, which opens inward. The neck of the tube is bent around and the end is in line with the valve *H*, and the diameter about the size of shot. The tube has some shot in it, and when the man blows into the tube the shot will acquire a velocity, issue from the tube, and strike the valve *H* and open it against the pressure that gives to it its velocity.*

When an injector fails to work, the tank-valve should be examined, and if that is found to be open, the next point is to take down the screen and see if there is any dirt in it. Blow the injector out with a

* Professor Sloane.

little steam. After this, if it does not work correctly, examine the joints in water or suction pipe and see if any air enters: if there is, tighten them up; and if all these necessary matters have been attended to, the injector will now probably work correctly.

Do not start out on the road until you are assured that both injectors are working correctly, for the right-hand one may fail at any time.

When an injector gets hot, the best way to make it work is to let the hot water out at the screen. Sometimes they can be made to work by blowing the water back into the tank, first dropping the tank-valve. When this is done, open tank-valve quickly and start suction. Another way is to pour cold water over the injector and pipes.

At present the lifting and non-lifting injectors are in use, also the restarting.

A lifting-injector is one that will lift the water to combining-tube. The non-lifting will not lift the water, but the water must flow to it. The restarting injector is one that, should the water-supply be stopped and then return, the injector would start to work again, as there is a continuous suction.

The difference between a lifting and restarting injector is, that in a lifting-injector there is generally a closed overflow, and when from any cause the flow of water or steam is stopped, the injector breaks and cannot go to work, because, there being no outlet for the steam except back into the tank through water-pipes, this forces the water away from the injector and makes it hot.

In a restarting injector (which is a lifting-injector

also) there is a free overflow, which is opened by the steam, and the tubes are provided with suitable openings. When the water breaks, the steam, instead of passing back into the water chamber and pipe, escapes beyond the combining-tube into the atmosphere, forming a continuous suction in the water-chambers, and when water returns it will go to work again; but if the overflow is fastened shut, it will not restart, but be as a closed overflow. A closed overflow seems to be preferred, as it will not let the water overflow into the waste-pipe when there is much variation in the pressure.

In fitting up an injector, all the tubes should be in line and free from obstruction inside; the joints on water-pipe must be tight, or the injector will not lift on account of the vacuum being impaired.

Another cause of the failure of an injector to work is dirt in the tube—usually the delivery-tube. This will generally be known by the steam being driven back in the tank, also by dirt, such as fine coal or waste, in the tank valve or screen. These obstruct the flow of water and prevent the injector from working. The screen should be taken down before going out on each trip.

Another cause of the failure of the injector to work is when the delivery-tube becomes worn or cut out at the throat. (See Fig. 189*a*.) This is caused by the tube being struck by the water after leaving the combining-tube, due to the velocity with which the water strikes it. This tube is the one that wears out most quickly.

Many trials have been made to get an injector to force very hot water, but the failure to do so in the

past has been caused by the temperature of the water being too high to condense the steam, which it must do before it will work. It is known that hotter water can be forced with steam of a low pressure than with

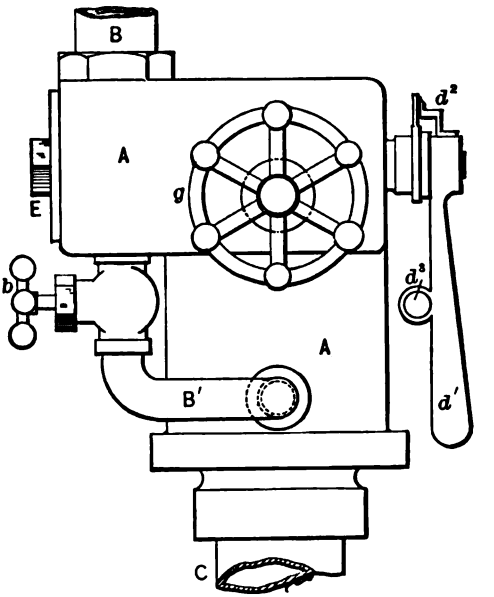

FIG. 191.—THE REAGAN INJECTOR. (Rear Elevation.)

that of a high temperature, for the reason that steam of a low temperature has less degrees of heat to be absorbed by the water, and can be condensed by water of a higher temperature.

The author has taken advantage of this point in injector of Fig. 191, where he converts the steam of a high temperature to a low temperature, before it combines with the water in the combining-tube.

The object sought for in the Reagan Injector was the construction of an injector that would force water

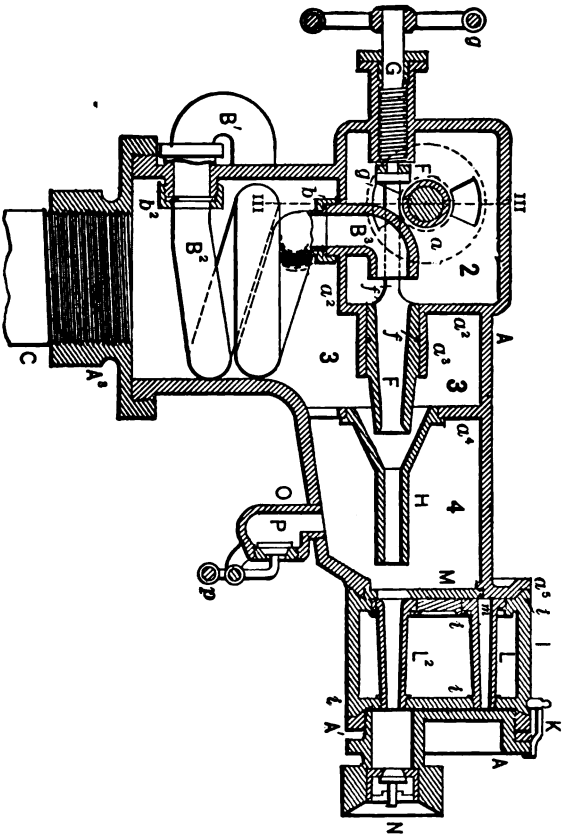

FIG. 192.—REAGAN INJECTOR. (Longitudinal Vertical Section.)

of a high temperature, to be a multi-tube injector, and to reduce the complication of the construction as much as possible.

The first point, that of forcing hot water, is accom-

plished by cooling the steam before it reaches the combining-tube, as in Fig. 192. The steam passes through the coil of pipe in water-chamber. This has the effect of reducing the temperature of the steam, so that it will readily combine or be condensed by the water of a high temperature.

This pipe can be passed through any body of water

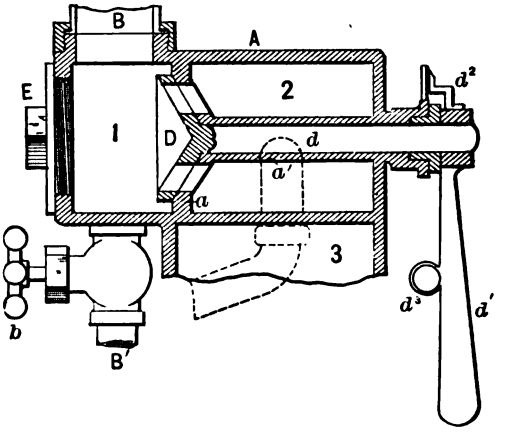

FIG. 193. THE REAGAN INJECTOR. (Vertical Cross-section on Line III III of Fig. 127.)

away from the injector, so that it is brought back to the steam-chamber again.

The second feature, that of multi-tubes, is accomplished by having a rotating cylinder, into which tubes are fitted as in Fig. 192. There can be combining and delivery tubes in line, thus making a multi-capacity injector, by rotating the cylinder in front of the steam-nozzle.

Another feature is that of making the steam-nozzle

act as a water-regulating valve, thus doing away with an extra valve.

Also, the steam-valve is fitted without packing, which is a valuable feature in an injector.

QUESTIONS.

Name the different parts of an injector as shown in Fig. 189.

They are the steam-valve and tube, the combining- and delivery-tube, the overflow and the check.

What takes place in the combining-tube?

The steam combines with the water and imparts to it a higher velocity.

By what tube is the capacity of an injector rated?

By the smallest diameter of the delivery-tube, and by the pressure.

Which tube receives the most wear, and why?

The delivery-tube receives the most wear, because it receives the water from the combining-tube, which has a high velocity, striking the delivery where the diameter is smallest.

What is the effect on the injector? (See Fig. 189*a*.)

Its cuts out the throat of the delivery, which prevents it from working when much worn.

For what is the overflow used?

It is used to allow the water to acquire a high velocity before closing it out and forcing the water in boiler; also, to have an outlet for the steam, which forms the suction to lift the water to the combining-tube.

What causes an injector to fail to work?

There are several causes: small supply of water caused by dirt in screen, dirt in tubes, tubes out of line, loose pipe-joints which impair the vacuum, and injector getting hot.

When an injector fails, what should be done?

Would look for any or all the causes stated.

When an injector gets hot, what is the best way of getting it to work?

By letting the hot water out at the screen, or by cooling the injector with cold water.

What is the difference between a lifting and a non-lifting injector?

In a lifting-injector the water is raised by the steam forming a vacuum; in a non-lifting, the water must flow to it.

What is a restarting injector?

An injector which will recommence work without the attention of the engineer, when from any cause the steam or water should have been stopped.

Why does it operate in this way?

The overflow is free or open, and the steam can escape into the atmosphere, forming a continuous vacuum.

Why is it that an injector with a closed overflow cannot restart?

Because the steam can only escape back into the water-pipe, which forces the water into the tank.

How can a restarting injector be changed to a non-restarter?

By closing the overflow-valve tight; this would make a heater out of it.

When running an engine, and it should become snow-

bound, what should be done to prevent freezing of injectors and pipes?

The frost-cocks should be opened and the water drained out of pipes and injector.

Are non-lifting injectors much used on locomotives, and are there any points in favor of the non-lifter?

There are not many used, but they have the advantage that the tubes do not become coated with sediment as does a lifting-injector, because the water surrounds the tubes and keeps them cool; in a lifting-injector the water falls away and the tubes become dry.

Is it policy to start out on the road without examining both injectors, or if the right-hand one should fail just before starting?

No, it is best to know that both are in working condition.

What should be done in cold weather with the left injector?

A heater should be made out of it to prevent it from freezing up.

Why does the right-hand injector not freeze also?

Because it is being used, and water in the pipes being kept in motion prevents it from freezing.

The injectors that are shown are of three types—single tube, non-restarting; double tube; and a restarting. All are lifting-injectors.

WILLIAM SELLERS & CO., INCORPORATED.

The cuts (Figs. 194, 195) show the new restarting injector of 1887. As will be seen, the principal difference between this injector and others is, that if from any

cause the flow of water or steam is interrupted and then returns, the injector starts to work without atten-

FIG. 194.—WILLIAM SELLERS & CO.'S RESTARTING INJECTOR. (Perspective View.)

tion, as long as the overflow-valve is open. To make a heater the overflow-valve is closed.

Its construction is such that small particles of dirt,

etc., are not liable to interfere with its working; and as its tubes are in a straight line, a wire can readily

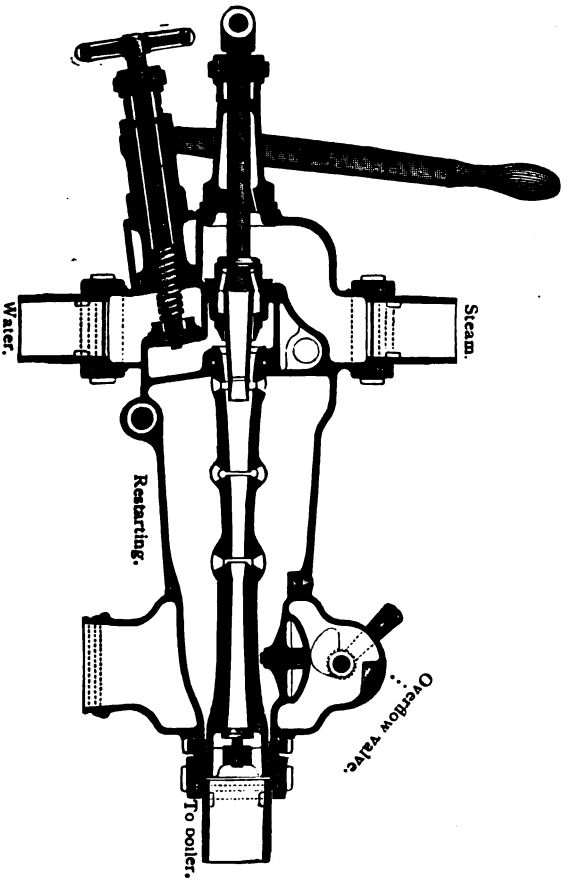

FIG. 195.—WILLIAM SELLERS & CO.'S RESTARTING INJECTOR. (Sectional View.)

be passed through them to dislodge an obstruction if necessary. By simply disconnecting the pipe union at

the delivery end of the injector the combining and delivery tubes may be taken entirely out.

Its manipulation when lifting the water is extremely simple:

To start.—Pull out the lever.

To stop.—Push in the lever.

Regulate for quantity with the water-valve.

When the water flows to the injector it is of course necessary to open the water-valve before pulling out the lever, and to close it after pushing in the lever.

In starting on high lifts and in lifting hot water it is best to pull out the lever slowly.

This apparatus will be found applicable to all kinds of service, and perfectly reliable under conditions much more severe than any likely to arise in ordinary practice on locomotives or on stationary or marine boilers. It will start at the lowest steam-pressures with water flowing to it, and will lift the water promptly, even when the suction-pipe is hot. At 10 pounds steam-pressure it will lift the water two feet; at 30 pounds,

CAPACITY OF INJECTOR.

Size No.	Cubic Feet per Hour at 120 lbs.	Gallons per Hour at 120 lbs.	Size of Pipe-steam and Delivery.			
			Iron.	Copper.	Water-Supply	
					Iron.	Copper.
4 5/16	75	562	3/4	1	3/4	1
5 1/16	118	885	1	1 1/8	1 1/4	1 1/4
6 1/8	170	1275	1 1/4	1 1/4	1 1/4	1 1/4
7 1/8	227	1702	1 1/4	1 1/4	1 1/4	1 1/4
8 1/8	291	2182	1 1/4	1 1/4	1 1/4	1 1/4
9 1/8	364	2730	2	2	2	2 1/4
10 1/8	444	3330	2	2	2	2 1/4
11 1/8	530	3975	2	2 1/4	2	2 1/4

five feet; and at all ordinary pressures, say 60 pounds and over, it will lift from twelve to eighteen feet.

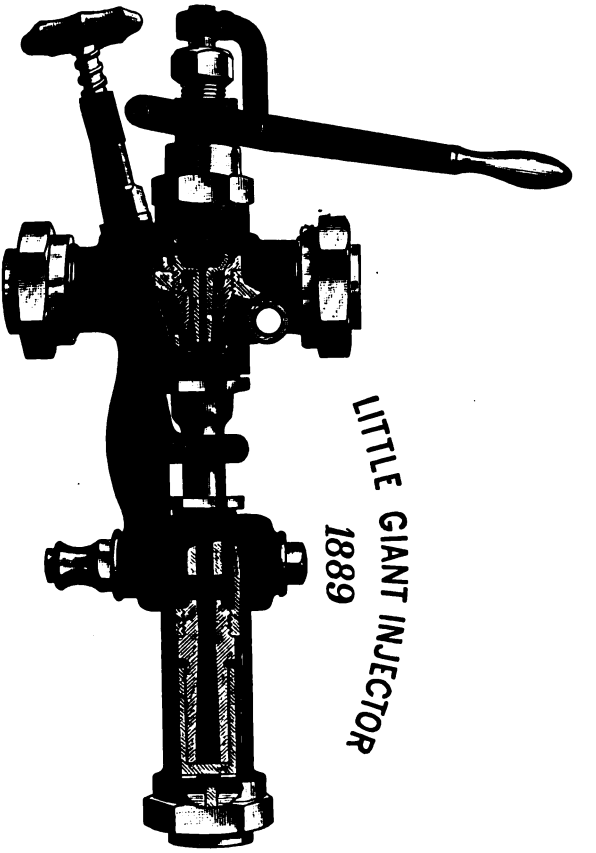

FIG. 196.

It requires no regulation to work without waste of water for any variation of steam-pressure above 40 pounds.

RUE INJECTORS.

The combining-tube is adjusted by a screw which gives very fine graduations. This pattern of injector (manufactured by the Rue Manufacturing Co.) conforms to the latest standard, and can be used in place of such with little if any change in pipes.

Directions for Operating.—To start injector: Have the combining-tube in position to allow sufficient water to condense the steam when starting-valve is wide open. Then open the starting-valve slightly; when water shows at overflow, open starting-valve wide, where it should remain while injector is at work. The quantity of water is graduated by moving the combining-tube. Towards the discharge gives *more* and towards the steam gives *less* water.

To stop injector: Close starting-valve. To use as a heater, close overflow by moving combining-tube against the discharge, and open steam-valve to admit what steam is required.

Size of Injector.	Copper Pipe, Outside.		Iron Pipe, Inside.		Gallons of Water per Hour with 125 Pounds Steam.
	Steam.	Water and Delivery.	Steam.	Water and Delivery.	
4	1 1/4	1 1/4	1	1	600
5	1 1/2	1 1/2	1 1/4	1 1/4	950
6	1 1/2	1 1/2	1 1/4	1 1/4	1275
7	1 3/4	1 3/4	1 1/2	1 1/2	1800
8	1 3/4	1 3/4	1 1/2	1 1/2	2250
9	1 3/4	2 1/4	1 1/2	2	2800
10	1 3/4	2 1/4	1 1/2	2	3500

THE METROPOLITAN DOUBLE-TUBE INJECTOR.

The locomotive injector shown in the engravings, in perspective and in section, is an improved form by

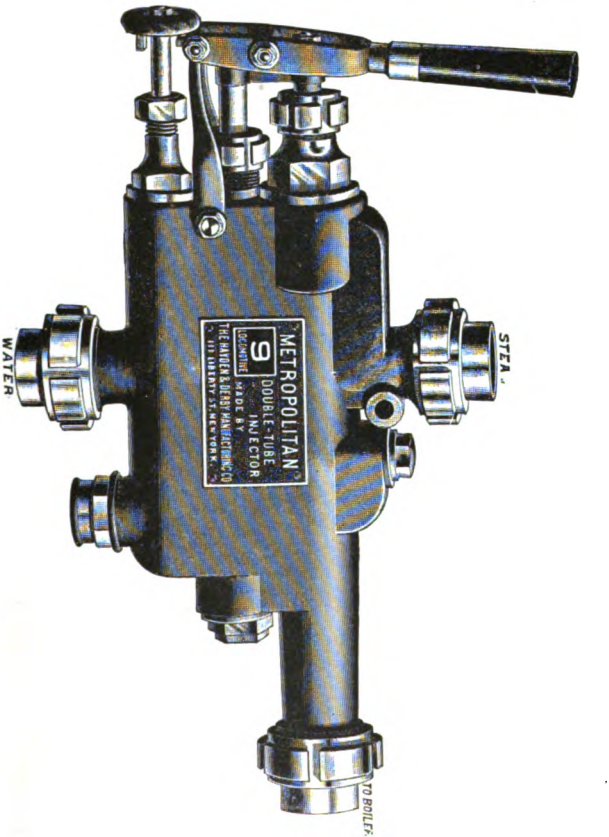

FIG. 197.—METROPOLITAN DOUBLE-TUBE LOCOMOTIVE INJECTOR.

the Hayden & Derby Manufacturing Co. of New York. The construction of the apparatus is simple.

There are no outside attachments to become broken or interfere with placing the numerous attachments necessary in a cab. The tubes are all removed from the back end of the injector, and can be taken out without taking the injector off the engine. The valve-seats are independent of the body casting, and can be easily replaced or reground. This latter feature is a particularly good one, as there is no necessity to put the body casting in a lathe to turn up the valve-seats. The overflow-valve stem is attached rigidly to the steam-valve stem, and when the injector is working the overflow is closed and the valve held to its seat by boiler-pressure.

Water cannot then run out of the overflow, and it is not necessary for an engineman to look out of a cab to see whether the injector is feeding or the water escaping from the overflow.

The sectional view shows all of the parts so clearly, that description is not necessary. At 6 is shown the steam-valve, and the parts relating to it are numbered 1 to 5. The forcing steam-tube is shown at 7, and the combining-tube at 8. At 10 is shown the line check-valve. The overflow-valve stem is shown at 12, and the valve and its seat and other parts at 16, 17, and 47. The regulating-valve wheel is shown at 20; 24 and 25 show the lifting steam-tube and combining-tube.

Another important feature claimed for this injector is that the capacity steadily increases as the steam pressure increases. For instance, with 125 lbs. steam-pressure the No. 9 injector has a capacity of 2900 gallons of water per hour; with 150 lbs. steam-pressure this capacity is about 3000 gallons of water per hour;

and with 180 lbs. of steam-pressure it is about 3075 gallons of water per hour. These injectors will start with 25 lbs. steam-pressure, and without any regulation

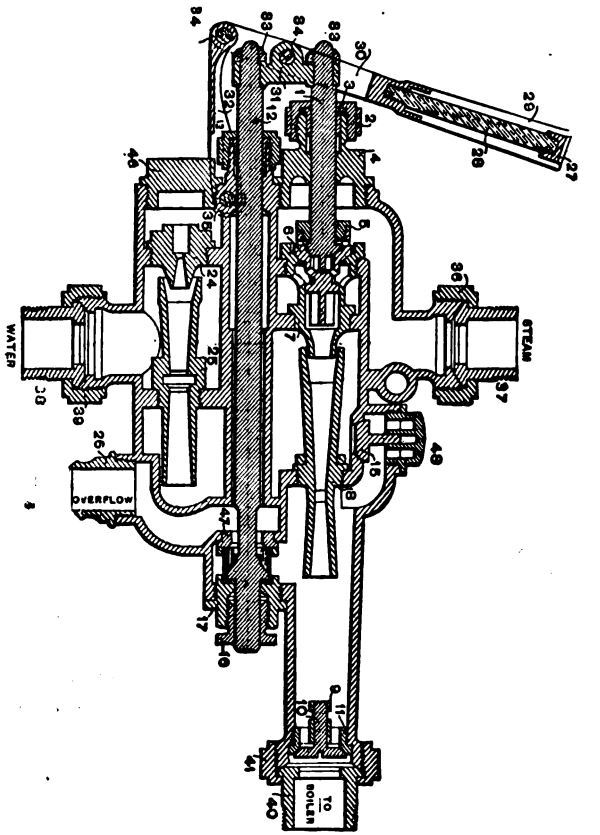

Fig. 96.

the steam or water supply will work at all steam-pressures up to 250 lbs. It is found that the independent lifting and forcing apparatus permits easy and close

regulation of the capacity, and owing to this apparatus these injectors are strong lifters, and no matter how hot the injector or suction-pipe may become, the injector will promptly lift the water. In the most severe test it has been found that it never requires over 30 to 40 seconds to bring the water, even after the injector has been used as a heater for some time.

SAFETY-VALVES.

The safety-valve is a very important device on any steam-boiler, as it governs the amount of pressure that can be carried by the boiler, forms the outlet for any pressure in excess of that which should be carried, and prevents boiler explosions due to high-pressure. This valve should not be tampered with after being set, especially by one not understanding its construction. Locomotives, as a rule, have two safety-valves on them: one is a lock-pop safety, and the other is not locked. The lock-pop is generally set at about 5 lbs. higher than the other, thus making it a positive safety, for if the other were tampered with, the lock-pop would relieve the boiler. A safety-valve must be able to rise at the predetermined pressure and relieve the boiler, and then close, thus preventing any further escape of steam until it reaches the proper pressure. There was this trouble in safety-valves prior to the Richardson safety, that when the valve raised it increased the tension of the spring, and caused the valve to close before the boiler was relieved of the proper amount of pressure, and then if the area of the valve were increased with a spring of the same tension, the valve would stay open

too long and reduce the pressure 15 or 20 lbs.,—not only an uneconomical but a very bad feature on a locomotive hauling heavy trains or on heavy grades. The first successful safety-valve was brought out by a locomotive-engineer named Geo. Richardson, who ran on the Troy and Boston Railroad. The construction is shown in Fig. 199. As will be seen, the valve on the outer edge has an adjustable lip *C'C'*, which can be raised or lowered, and is locked in position by the set-screws *LL*, which fit in the indents *K*; this prevents the lip from turning around. The body of valve behind the lip is hollow, as *CC*; the seat has a cavity around it, as *aa*, into which lip *C'C'* projects. The action of this valve, then, is to get an increased pressure to hold the valve up without increasing the area of the valve proper, which is accomplished in this manner: When the valve rises the steam fills in the cavity *CC*, and is then diverted by the lip *C'C'* down into the cavity *aa*, this produces a reaction or gain of pressure against the valve, and helps to hold it up. To increase the time that the valve will stay up and the amount of pressure reduced, the adjustable lip should be screwed down, which will reduce the opening between the lip *C'C'* and the cavity *aa*. To cause the valve to close quickly and not reduce the pressure too much, the lip should be raised. The proper position at which the valve-lip should be set is when the valve will close at a pressure of 3 to 5 lbs. less than that at which it raised. Bear in mind that it takes but a very little movement of the lip to make a great difference in the action of the valve. To increase the tension of the spring *m*, Fig. 201, the nut *R* is screwed down. The valve in Fig. 201 is a

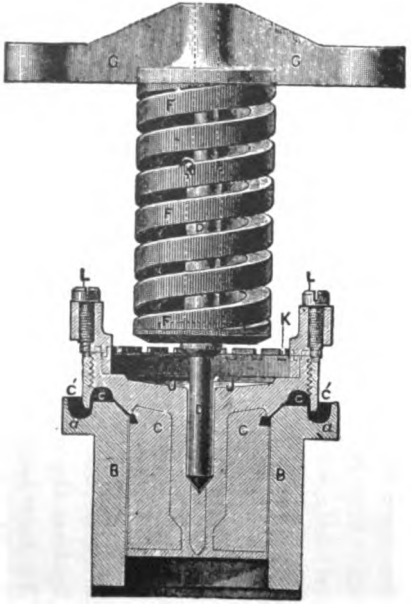

FIG. 199.

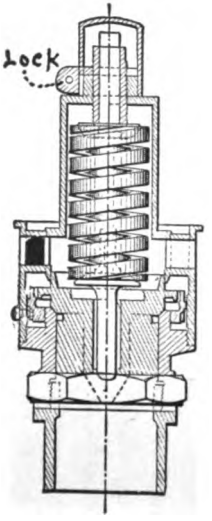

FIG. 200.

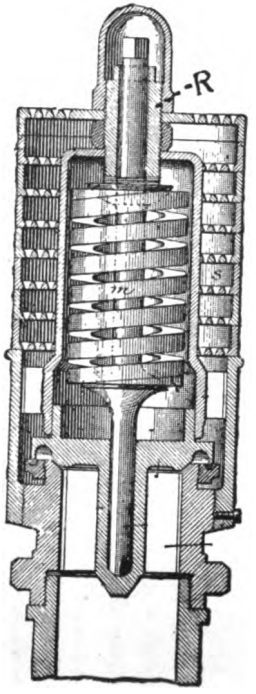

FIG. 201.

combined safety-valve and muffler; the steam passes through the plates in the casing, which are full of holes;

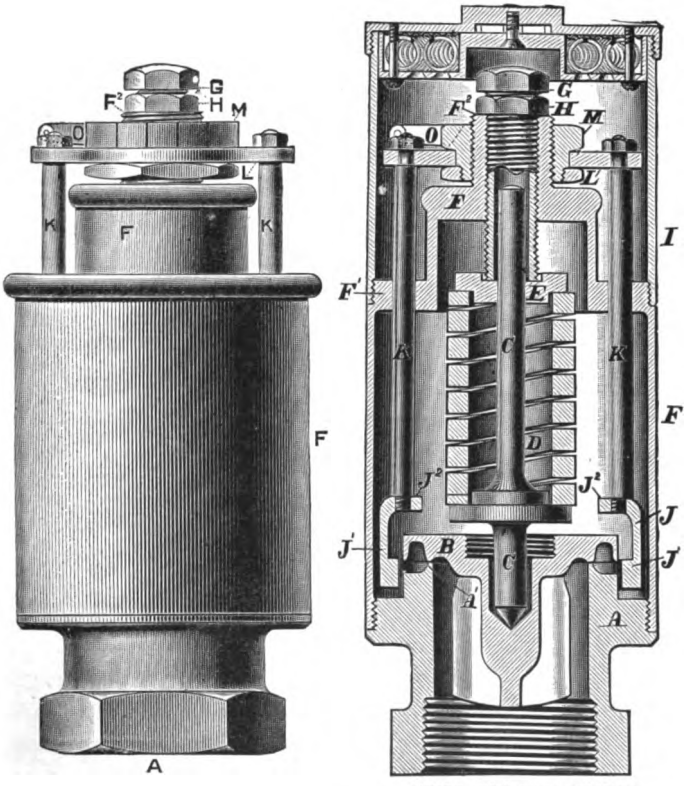

OUTSIDE VIEW WITHOUT MUFFLER. INSIDE VIEW WITH MUFFLER.

FIG. 202.—THE KINNEY LOCOMOTIVE SAFETY-VALVE.

A, base; *A'*, valve-seat; *B*, valve; *C*, spindle; *D*, spring; *F*, follower; *FF'*, main casting; *F²*, thread-hub; *G*, compression-screw; *H*, check-nut; *I*, muffler; *J*, regulating-ring; *JJ'*, lugs of ring; *K*, parallel rods; *L*, cross-head; *M*, adjusting nut; *O*, locking-latch.

this has a tendency to break the force of the steam before it reaches the atmosphere, thus reducing the

noise, which was a great nuisance to the public in the older form of valves.

Another design of safety-valve which is coming into use is that of Fig. 202. The claims are in the adjustment of the valve. In order to adjust either the pressure or the blow-down, first remove the muffler *I*; this exposes the compression-screw *G*, adjustable nut *M*, cross-head *L*, locking-latch *O*, and check-nut *H*. Screwing down the compression-nut *G*, the pressure is increased, and the reverse for lessening the pressure. As a rule, from $\frac{1}{16}$ to $\frac{1}{4}$ turn will change the pressure of the valve 5 lbs. either way. By raising the locking-latch *O* screw down on the adjusting-nut *M*, the blow-down is reduced 1 lb., and the reverse increases it 1 lb. This valve can be adjusted without being taken off the dome, made by American Steam Gauge Co., Boston, Mass.

STEAM-GAUGES.

Two forms of steam-gauges are in general use on locomotives, one using a diaphragm, and the other using a hollow tube in the shape of a letter C, having an elliptical section. In the gauge having a diaphragm the pressure is behind the diaphragm, which is fastened on a round chamber, the diaphragm acting as a head, which is steam-tight. The face of diaphragm is corrugated. The pressure bearing against the diaphragm causes it to bulge out in the middle, and the amount that the middle rises depends on the pressure behind it. Bearing against the diaphragm in the centre is a bell-crank lever; attached to the other arm of lever is a link, which is connected to a segment having teeth; this

segment is pivoted on the lower end. In contact with teeth is a small toothed pinion; to the shaft of this pinion is attached the hand or pointer. Any movement of diaphragm will move the hand through the mechanism just described.

In the other form, Fig. 203, the pressure acts on the

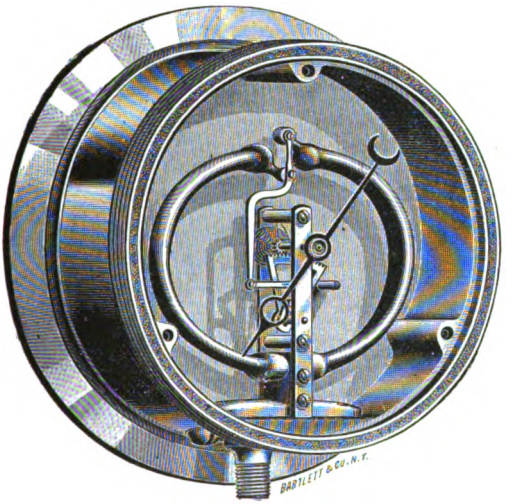

FIG. 203.—IMPROVED STEAM-GAUGE.

inside of tube *cc*; this pressure causes the end of tubes to straighten out, thus spreading the ends, to which is attached the bent lever *CFLM*. This is connected to the toothed segment *e* by rod *R*; the segment *e* rotates the small pinion and shaft *S*, which carries the index or hand *PP* of gauge. By having the lever *CFLM* attached to the ends of tubes *a*, *c*, as in Fig. 203, the distance the lower end of lever *CFLM* moves is double that

which it would be if only attached to one end of tube, and having the fulcrum rigidly connected. The tubes are made of brass, and are seamless,—which is a great improvement, and required some time and money to accomplish it. The great trouble with the brazed tubes was, that they would leak, this would destroy the

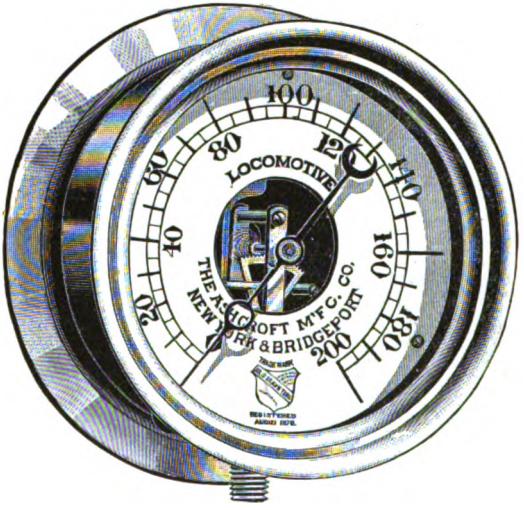

FIG. 204.—IMPROVED STEAM-GAUGE.

accuracy, and steam escaping inside the gauge would make it hard to see the dial. The tubes are attached to boiler by a pipe attached at *H*. The seamless-tube gauges are made by the Ashcroft Manufacturing Company of New York. On all gauges the pipe connecting gauge with boiler is bent in the shape of the letter S. The idea of this is to prevent the steam from coming in contact with the diaphragm or tubes, as this would affect their elasticity. The steam is condensed in the

pipe, and the steam-pressure forces the water up into tubes or diaphragm-chamber; this pipe is provided with a cock to close when it is desired to remove the gauge when steam is in boiler. Gauges get out of order, or do not register correctly, and then are called heavy or light gauge.

A heavy indicating-gauge is one that registers more than there is pressure in boiler.* A light indicating-gauge, one that registers less than pressure in boiler. A heavy indicating-gauge is very often caused by the diaphragm becoming set or extended; some tube-gauges will do the same. In this case the hand will not come back to the pin, but will show 10 or 15 lbs. without any pressure in the boiler. A light indicating-gauge may be caused by the tubes or diaphragm not moving the proper distance at which the dial was marked off at the time it was tested when made, or by a dial moving around. Another cause is any lost motion in the mechanism which would cause a light indicating-gauge, for the tubes might be moving the proper distance, but the mechanism would not move the index the proper distance on dial. In a diaphragm-gauge any dirt that would get between the end of bell-crank lever and diaphragm would cause a heavy indicating-gauge. Another cause is the opening to diaphragm or tube becoming corroded or clogged up, not allowing the pressure to act as it should in tubes or diaphragm.

* The terms *light* and *heavy gauge* are used in a different manner when testing a gauge. A gauge is said to be *heavy* when it indicates less than test gauge, and a *light gauge* when it indicates more than test gauge. In the first case it would require 90 lbs. of steam in boiler to make it indicate 80 lbs. of steam. Second case it would require 70 lbs. to make it indicate 80 lbs. of steam.

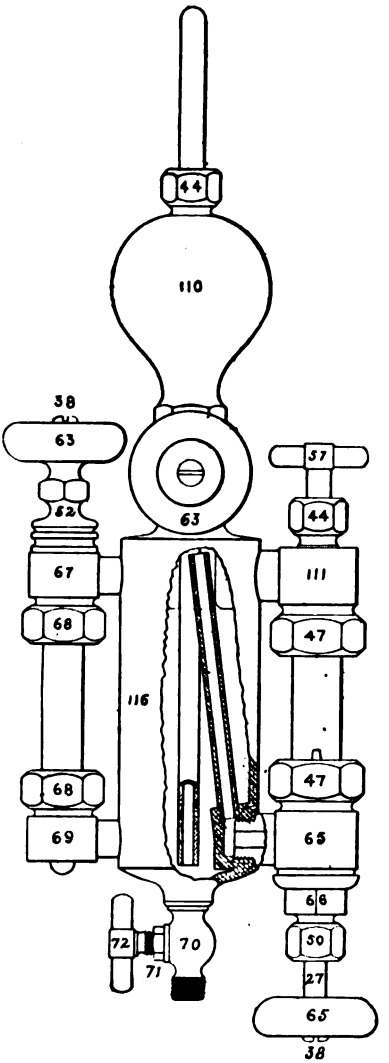

27. Feed-valve Stem.
38. Handle-button.
43. Globe-valve Centre-piece.
44. Globe-valve-stem Nut.
44. Equalizing-tube Nut.
44. Pulsating-stem Nut.
45. Globe-valve Stem.
47. ⅜ Nut.
50. Feed-stem Nut.
52. Filler-plug.
57. Pulsating-valve Stem.
62. Globe-valve.
63. Wood-handle.
65. Lower Feed-arm.
66. Feed-valve.
67. Upper Gauge-arm.
68. ⅜ Nut.
69. Lower Gauge-arm.
70. Drain-valve.
71. Drain-valve Centre-piece.
72. Drain-valve Stem.
110. Condenser.
111. Upper Feed-arm.
112. Support-arm.
113. Right and Left Coupling-nut.
114. Support-post.
115. Equalizing-tube.
116. Body.

FIG. 205.—THE "DETROIT" NO. 1 IMPROVED AIR-PUMP LUBRICATOR. (New Style.)

LOCOMOTIVE-CYLINDER LUBRICATORS (DETROIT).

In this lubricator, as in all others of this class, the weight of a volume of water displaces the oil in the oil-reservoir, causing it to flow upward through water in glass tubes, which open into the pipe leading to the steam-chest. The method of filling and the operation of the lubricator is as follows: Before filling the reservoir the valves must be closed to prevent any steam from getting into the lubricator.* The valves first to be closed are the water-valve 9 and the feed-valves 26; then open the drain-valve 33, and let the water of condensation run out, removing the filler stopple 42. After filling the reservoir the stopple 42 should be put in, and the steam-valve located at or near the steam-bridge in the cab opened; also open water-valve 9 when the lubricator is to be set in operation. The feed-valves are opened and regulated as required by engineer. When steam is admitted into the condenser 110, this fills up with water, which also passes down the water-tube 36 underneath the oil in reservoir 2 the oil is then forced upward, and passes into the oil-tubes 37, one to each side. The oil then surrounds the feed-valves 26, and when these are opened the oil will pass through in drops, raising through the water in sight-feed glasses, and by the check-valve 20 into upper feed-arm 15, and from there through the nozzle 22 into tallow-pipe. In order to equalize the pressure on the top of water in the sight-feed glasses, there are provided equalizing-tubes 7, 7, which convey the steam to upper feed-arm

* Figs. 207, 208, 209

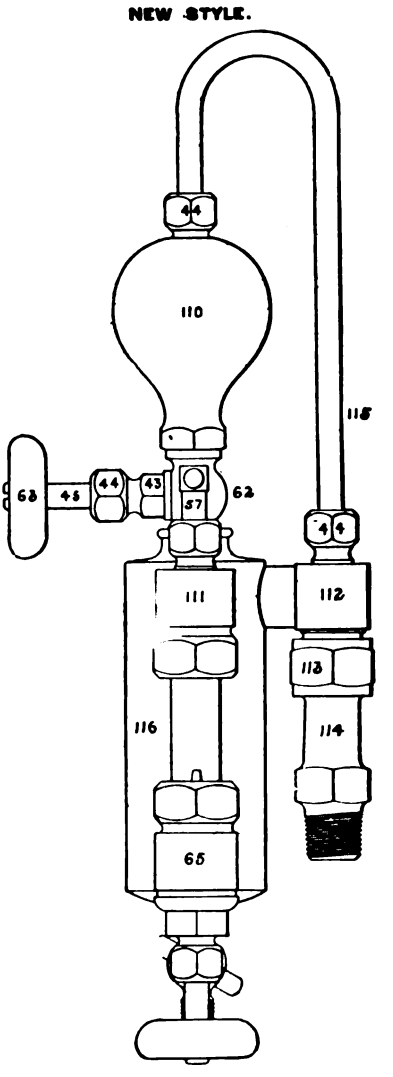

FIG. 206. —THE "DETROIT" NO. 1 IMPROVED AIR-PUMP LUBRICATOR.

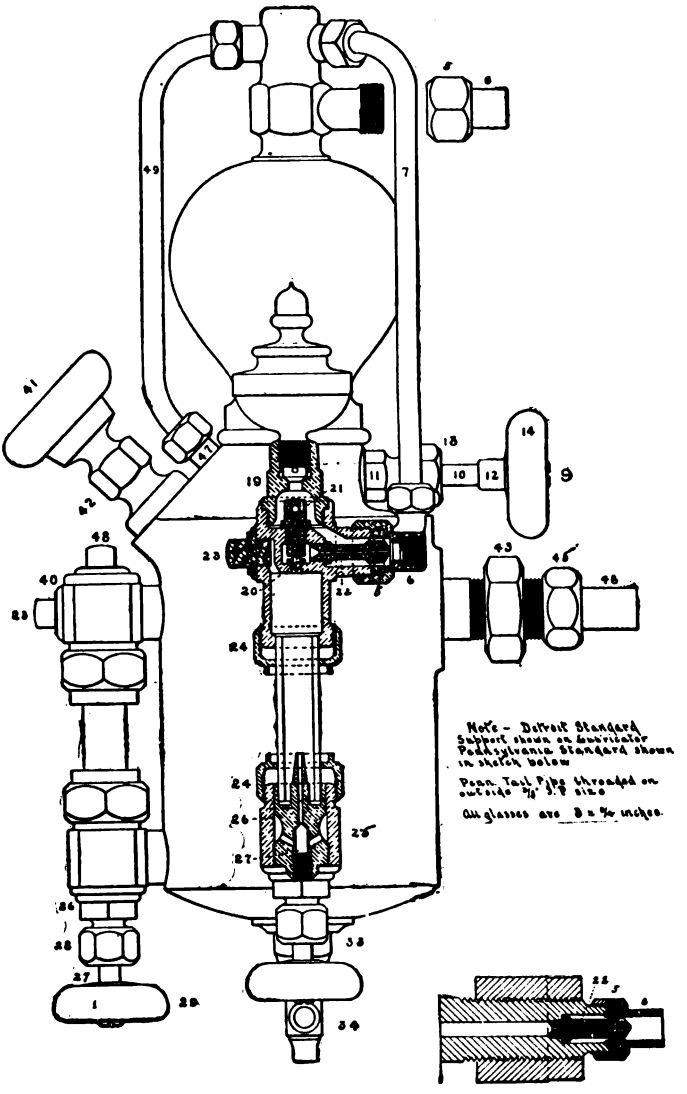
Note - Detroit Standard
Support shown on Lubricator
Pennsylvania Standard shown
in sketch below
Pean. Tail Pipe threaded on
outside 3/8" S.P. size
All glasses are 3 x 3/4 inches.

FIG. 207.

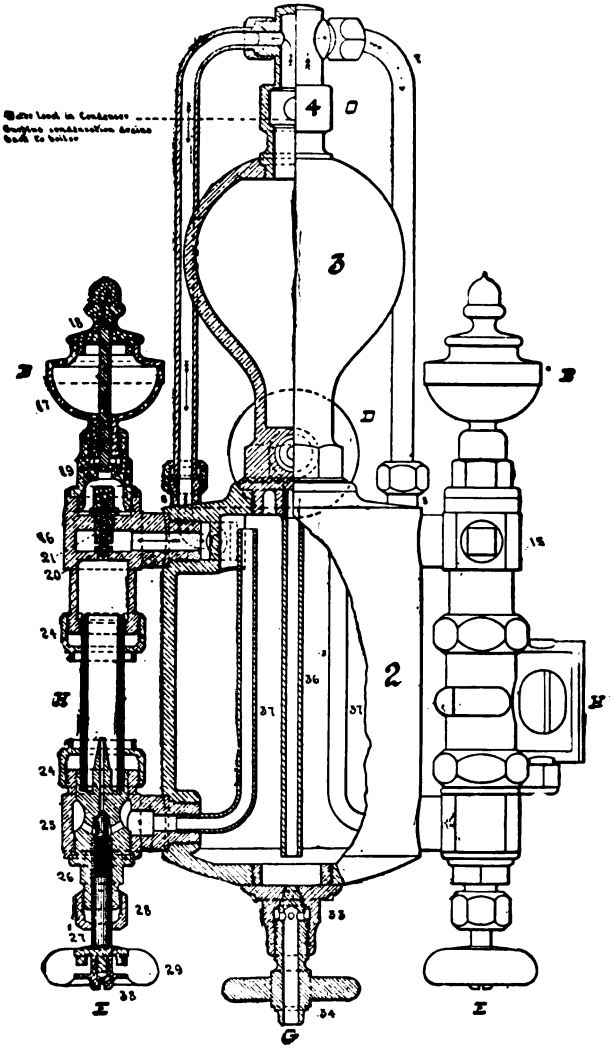

FIG. 208.—THE "DETROIT" NO. 2 IMPROVED LOCOMOTIVE-CYLINDER LUBRICATOR. (Front View.)

DESCRIPTION OF PARTS OF THE DETROIT IMPROVED LOCOMOTIVE-CYLINDER LUBRICATOR.

2. Oil-reservoir.
3. Condenser.
4. Extension-top, complete.
5. Tail-nut.
6. " -pipe.
7. Equalizing-tubes.
8. Elbow.
9. Water-valve, complete.
10. " Stem.
11. " Centre-piece.
12. " Follower-plate.
13. " Packing-nut.
14. Wood-handle.
15. Upper Feed-arm, right.
16. " " left.
17. Hand-oiler.
18. " Cover.
19. " Plug.
20. Check-valve.
21. " Guide.
22. Nozzle.
23. Water-plug.
24. Packing-nut for Glass.
25. Lower Feed-arm, complete.
26. Feed-valve.
27. " Stem.
28. " Packing-nut.
29. " Stem-handle.
30. Filler-arm.
31. " -plug.
32. Lower Gauge-arm.
33. Drain-valve.
34. " Stem.
35. Jam-nut.
36. Water-tube.
37. Oil-tube.
38. Handle-button.

15*a*. Upper Feed-arm, complete, right.

16*a*. Upper Feed-arm, complete, left.

All Glasses. 3 × ⅝.

through a cored passage, and at the same time the steam escaping through the nozzle 22 draws the oil out and forces it into the tallow-pipe, this being the action

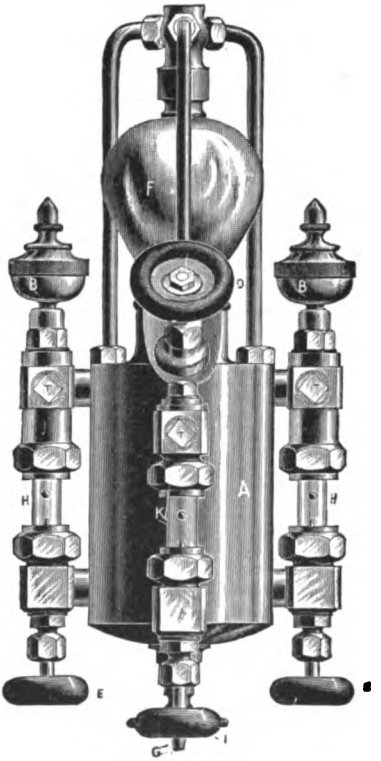

FIG. 209.

complete.* The idea in illustrating this lubricator in full and detail, with each part numbered and named, is to try to make it beneficial to the engineer and fireman. In making out work reports the engineer is often at

*Figs. 207, 208, 209.

loss for a proper name to give the broken parts, but by referring to the cuts and number as shown, the engineer has a guide which the writer hopes will meet all requirements.

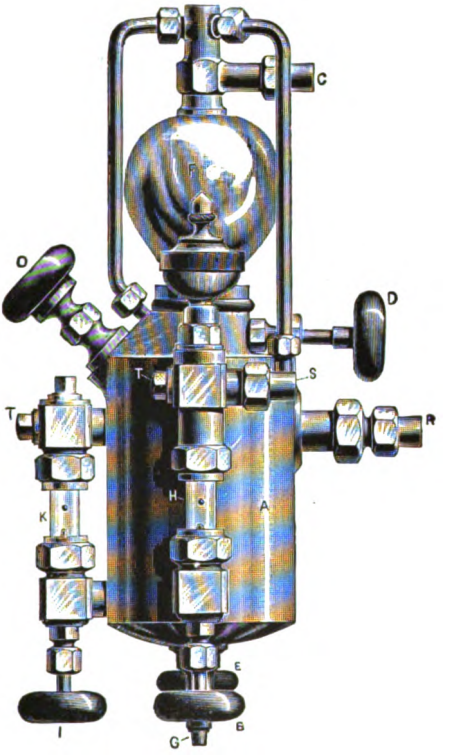

FIG. 210.—THE "DETROIT" NO. 3 TRIPLE LOCOMOTIVE-CYLINDER LUBRICATOR. (Side View.)

The principal points of merit in the Detroit lubricator are as follows: The equalizing-pipes start from a point higher than the steam inlet at *C*, and owing to

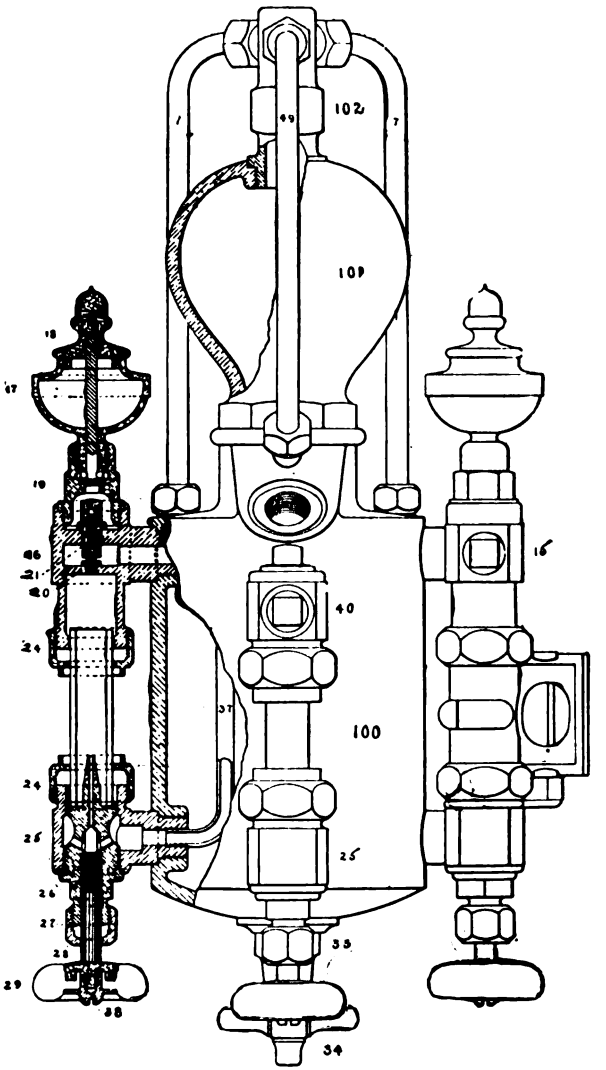

FIG. 211.—THE "DETROIT" NO. 3 TRIPLE LOCOMOTIVE-CYLINDER LUBRICATOR. (Front View.)

DESCRIPTION OF PARTS OF THE DETROIT TRIPLE LOCOMOTIVE-CYLINDER LUBRICATOR.

100. Oil-reservoir.
101. Condenser.
102. Extension-top.
6. Tail-nut.
7. Equalizing-tubes.
8. Elbows.
6. Tail-pipe.
9 Water-valve, complete.
10. " Stem.
11. " Centre-piece.
12. " Follower.
13. " Packing-nut.
14. Wood-handle.
15. Upper Feed-arm, right.
16. " " left.
17. Hand-oiler.
18. " Cover.
19. " Plug.
20. Check-valve.
21. " Guide.
22. Nozzle.
23. Water-plug.
24. Packing-nut for Glass.
25. Lower Feed-arm.
26 Feed-valve.
27. " Stem.
28. " Nut.
29. " Handle.
33. Drain-valve.
34. " Stem.
37. Oil-tube.
38. Handle-button.
40. Upper Feed-arm to Air.
41. Filler Stopple-handle. Brake-attachment.
42. Filler Stopple.
43. Jamb-nut.
45. Tail-nut to Air-brake Attachment.
46 Tail-pipe to Air-brake Attachment.
48. Check-guide to Air brake Attachment.
49. Equalizing-tube to Air-brake Attachment.

All Glasses, $3 \times \frac{3}{4}$.

this fact all surplus condensation must drain back into the boiler, and oil and steam only (which are both lubricants) pass through the tallow-pipes to the valves and cylinders. This is of the utmost importance, because better lubrication is secured with a minimum amount of oil, and absolute regularity of feed is obtained.

The equalizing-pipes being on outside of lubricator, leakage or defects in same are readily detected and remedied, all overheating of lubricator is avoided, and a full supply of condensation is always to be depended on.

In case of breakage of sight-feed glass, no steam can escape, as ports are instantly closed automatically by check-valve over sight-feed glass.

The disabling of one side of the lubricator will not affect the satisfactory working of the opposite side.

There is no possibility of cross-feed to one cylinder or into boiler. No movement of throttle-lever will cause any variation of feed. It is as simple in operation as those in use on stationary engines, and effects an enormous saving in oil and wear of machinery. The lubricator is made as a combined air-pump and cylinder-lubricator.

PRESSURE-REGULATORS FOR STEAM-HEATING.

As most all trunk lines have adopted the use of steam-heat for passenger trains, the locomotives are equipped with pressure-reducing valves. The construction and action of these valves should be understood by the engineer and fireman. The valves shown are examples of good reducing-valves, giving good service on standard railroads in the country. A reducing-valve which will shut off steam in case of a failure in opera-

tion due to a broken spring. Such a valve is found in the Foster "pressure-regulator," Fig. 213, the action of which is as follows: Steam enters at *A*, and passing through the valve is delivered at *B*. As will be seen, the delivery-pressure entering chamber *K* tends to raise

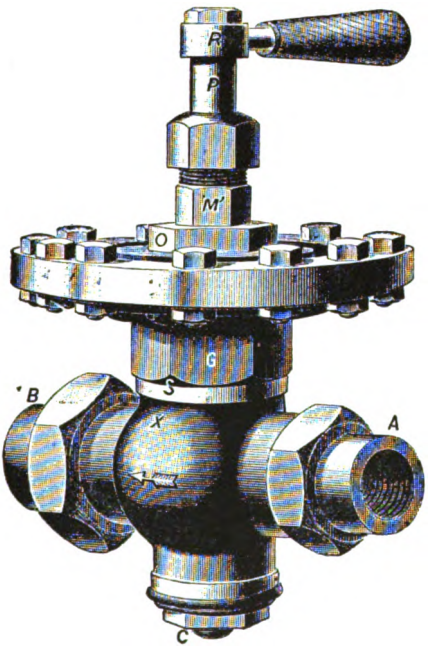

FIG. 212.—FOSTER PRESSURE-REGULATOR.

the diaphragm and to close the valve. In opposition to this the compressed spring *H* tends to open the valve. When the valve is in operation there is an equilibrium between these two forces. If the delivery-pressure falls, the pressure on the diaphragm is diminished, and the spring, overcoming the lighter resistance, opens the

valve until the equilibrium is again established and the pressure restored; on the other hand, any increased delivery-pressure bearing on the diaphragm overcomes the resistance of the spring and draws the valve toward its seat in proportion to the increased pressure. When

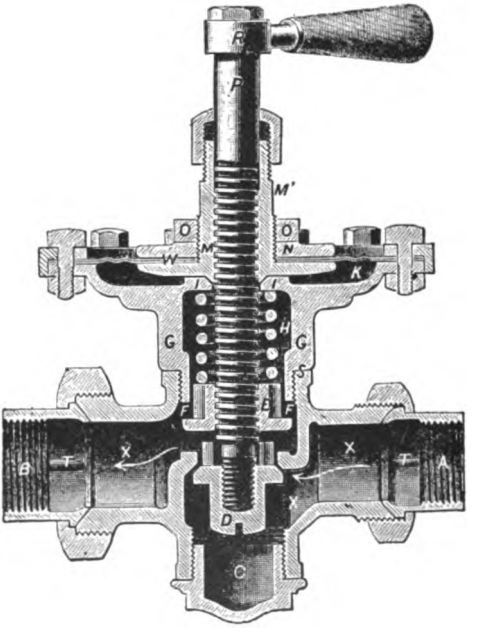

FIG. 213.—FOSTER PRESSURE-REGULATOR.

the tension of the spring is proportioned to the pressure bearing on the diaphragm, a constant and uniform discharge is insured.

The spring-nut *E* is threaded on to the spindle, and, having wings which extend into the hexagon-spring

chamber *H*, it is prevented from turning with the spindle, but is free to move up and down with it. The flange on the lower side of the spring-nut *E* is a stop to prevent an excessive lift and rupture of the diaphragm. The opening of the valve *D* is regulated by turning the spindle, which is threaded into *M*.

It will be seen from this that if the spring should break the equilibrium would be destroyed, and the delivery-pressure bearing on the diaphragm would close the valve and stop the flow of steam to the train-pipe. In this case it is not only a regulating-valve, but in the event of the spring breaking it becomes an automatic check-valve.

This valve, being an automatic regulator, can control to a nicety the steam admitted to each car, making it possible to carry in the train-pipe enough pressure to get a quick and adequate circulation the whole length of the train, and at the same time to carry a low-pressure in each car. This is the ideal condition. The parts are named so clearly in the descriptions, that in case the engineer has a report to make on the work slip, he will not be at a loss for a name for the different parts to be repaired on either of these regulators.

THE MASON REDUCING-VALVE FOR LOCOMOTIVES.

This valve is designed to automatically reduce and maintain an even steam-pressure for heating cars from the locomotives. It is placed in the steam-supply pipe leading from the boiler to the heating system, and regulates the amount of steam passing to the system, allowing only sufficient steam to maintain the desired pressure. These reducing-valves are fitted with union

connections or tapped ends, in any size preferred. They are thoroughly reliable, and are the standard used on over one hundred railroads. [A good reason for showing this valve.—AUTHOR.]

Description. (See Sectional View.)—The principle on which the Mason Reducing-valve works is that of an auxiliary-valve 11 controlled by the low-pressure in the heating system, through the medium of a metal diaphragm, and admits steam from the initial side of the valve through a port to operate a piston 17, which in turn opens the main-valve 16, and admits steam to the system. By referring to sectional view it will be seen that the steam enters the valve at the side marked "inlet," a small portion of it passing up through the auxiliary-valve 11. This valve 11 is forced open by the compression of the large spiral spring 8, acting on the button 10 through the diaphragm, so that in opening the valve 11 the diaphragm is also forced down. As soon as the valve 11 is opened steam passes through and into port *N* under piston 17. By raising this piston 17 the main-valve 16 is opened against the initial pressure, since the area of valve 16 is only one half of that of piston 17. Steam is thus admitted to the system. When the pressure in the system has reached the required point,

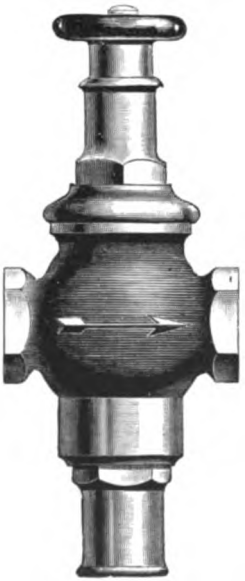

FIG. 214.—MASON REDUCING-VALVE.

which is determined by the spring 8, the diaphragm is forced upward by the low pressure, which passes up through port *XX*, to chamber *OO*, under the diaphragm, allowing valve 11 to close, shutting off the steam from piston 17. The main-valve 16 is now forced to its seat by the initial pressure shutting off steam from the system, and pushing the piston 17 down to the bottom of its stroke. The steam beneath this piston 17 exhausts freely around it (the piston being fitted loosely for this purpose), and passes off into the system. It will be seen from this that when the pressure in the heating system has reached a predetermined point the flow of steam will be automatically checked, and when the pressure is slightly reduced the valve will again open and supply the required amount of steam. The piston 17 is fitted with a dash-pot 18, which prevents chattering or pounding when the pressure is suddenly reduced.

Directions.—Place the valve vertically in the steam-supply pipe. The steam should flow through the valve in the direction indicated by the arrow cast in the side. Before connecting the valve the pipes should be thoroughly blown out, in order to expel all dirt and chips. If the piping is new, steam should be allowed to flow through for some little time, so as to burn off all the oil or grease which may be in it.

When ready to let on steam, turn the wheel at top of the valve in the same direction as you would to open a globe-valve. Time must be allowed for the system to fill, before the required pressure is obtained.

If the valve should not maintain a low pressure, it will probably be due to the fact that some dirt or

chips from the piping have lodged in the seat of the valve 16.

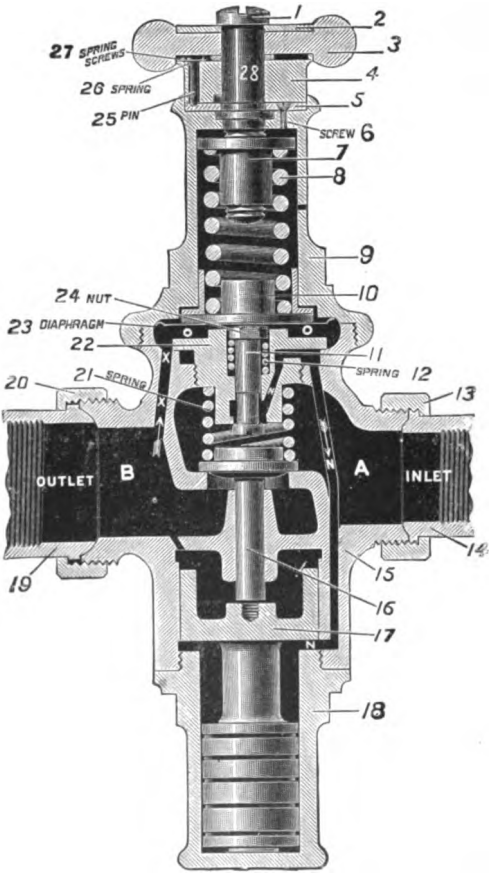

FIG. 215.—MASON REDUCING-VALVE. (Sectional View.)

To take the valve apart, the tension on the diaphragm spring 8 must first be removed by turning the wheel as

far as it will go in the direction taken by the hands of a watch. Then unscrew the spring-case 9, and remove the button 10 and the diaphragm; also remove the cap 22, which contains the auxiliary-valve. The threaded rod which accompanies each valve can then be screwed into the valve-disk 16, which should work easily. Pull out this valve and clean the seat. Then insert the rod through the valve-stem hole, screw it into the piston 17, and see if it works up and down easily. It will not be found possible to raise and lower the piston 17 suddenly, as the dash-pot 18 will restrain it. If the piston 17 is found to be stuck fast, remove the dash-pot 18 at the bottom of the valve, pull out the piston and clean it with fine emery-cloth, being careful to wipe off all emery before replacing. Before replacing the cap 22, examine the small auxiliary-valve 11, and see that it is tight, and free from dirt. Be sure that the diaphragm 23 is perfectly clean, also that there is no dirt where it makes its seat.

The wheel is made self-locking in any position by means of a steel locking-pin 25, which is forced by a spring into any one of twelve recesses in a hardened steel plate 5. We advise removing the valve during the summer. Before replacing, thoroughly clean and oil all the parts.

CHAPTER XVII.*

BRAKES, AIR-PUMPS, VALVES, PUMP-GOVERNORS, AND WESTINGHOUSE BRAKES.

THE Westinghouse Improved Quick-action Automatic Brake consists of the following essential parts:

1. THE STEAM ENGINE AND PUMP, which furnishes the compressed air.

2. THE MAIN RESERVOIR, in which the compressed air is stored.

3. THE ENGINEER'S BRAKE AND EQUALIZING-DISCHARGE VALVE, which regulates the flow of air from the main reservoir into the brake-pipe for releasing the brakes, and from the main train or brake pipe to the atmosphere for applying the brakes.

4. THE MAIN TRAIN OR BRAKE PIPE, which leads from the main reservoir, to the engineer's brake and equalizing-discharge valve, and thence along the train, supplying the apparatus on each vehicle with air.

5. THE AUXILIARY RESERVOIR, which takes a supply of air from the main reservoir, through the brake-pipe, and stores it for use on its own vehicle.

6. THE BRAKE-CYLINDER, which has its piston-rod attached to the brake-levers in such a manner that,

---

* This chapter is taken from the Instruction-book of the Westinghouse Air-brake Company.

when the piston is forced out by air-pressure, the brakes are applied.

7. THE IMPROVED QUICK-ACTION AUTOMATIC TRIPLE-VALVE, which is suitably connected to the main train-pipe, auxiliary reservoir, and brake-cylinder, and is operated by the variation of pressure in the brake-pipe (1) so as to admit air from the auxiliary reservoir (and under certain desirable conditions, as will be explained hereafter, from the train-pipe) to the brake-cylinder which applies the brakes, at the same time cutting off communication from the brake-pipe to the auxiliary reservoir, or (2) to restore the supply from the train-pipe to the auxiliary reservoir, at the same time letting the air in the brake-cylinder escape, which releases the brakes.

8. THE COUPLINGS, which are attached to flexible hose and connect the train-pipe from one vehicle to another.

9. THE AIR-GAUGE, which, being of the duplex pattern, shows simultaneously the pressures in the main reservoir and the train-pipe.

10. THE PUMP-GOVERNOR, which regulates the supply of steam to the pump, stopping it when the maximum air-pressure desired has been accumulated in the train brake-pipe and reservoirs.

The automatic action of the brake is due to the construction of the triple-valve, the primary parts of which are a piston and slide-valve. A moderate reduction of air-pressure in the train-pipe causes the greater pressure remaining stored in the auxiliary reservoir to force the piston of the triple-valve and its slide-valve to a position which will allow the air in the auxiliary reservoir

to pass directly into the brake-cylinder and apply the brake.

A sudden or violent reduction of the air in the train-pipe produces the same effect, and in addition to this causes supplemental valves in the triple-valve to be opened, permitting the pressure in the train-pipe to also enter the brake-cylinder, augmenting the pressure derived from the auxiliary reservoir about 20 per cent, producing practically instantaneous action of the brakes to their highest efficiency throughout the entire train.

When the pressure in the brake-pipe is again restored to an amount in excess of that remaining in the auxiliary reservoir, the piston and slide-valve are forced in the opposite direction to their normal position, opening communication from the train-pipe to the auxiliary reservoir, and permitting the air in the brake-cylinder to escape to the atmosphere, thus releasing the brakes.

If the engineer wishes to apply the brakes, he moves the handle of the engineer's brake-valve to the right, which first closes the port, retaining the pressure in the main reservoir, and then permits a portion of the air in the train-pipe to escape.

To release the brakes, he moves the handle to the extreme left, which allows the air in the main reservoir to flow freely into the brake-pipe, restoring the pressure and releasing the brakes.

A valve called the Conductor's Valve is placed in each car, with a cord running throughout the length of the car, and any of the trainmen, by pulling this cord,

can open the valve, which allows the air to escape from the train-pipe, applying the brake.

When the train has been brought to a full stop in this manner the valve should be closed.

Should the train break in two, the air in the brake-pipe escapes, and the brakes are applied instantaneously to both sections of the train. The brakes are also automatically applied should a hose or pipe burst. It will therefore be seen that *any reduction of pressure in the train-pipes applies the brakes*—which is the essential feature of the automatic brake.

An angle-cock is placed on each end of the train-pipe, and is closed before separating the couplings, thus preventing the application of the brakes when cars are uncoupled.

A stop-cock is placed in the branch-pipe leading from the main train-pipe to the quick-action triple-valve, and one in main train-pipe near the engineer's brake-valve, and within convenient reach of the engineer. The former is for the purpose of cutting out or rendering inoperative the brake on any particular car which may have become disabled through damage, and the latter for cutting out the engineer's brake-valve upon all but the leading engine, where two or more engines are coupled in the same train.

It is desirable to use the old-style plain automatic triple-valve for locomotive driver and tender brakes, and its illustration in this connection will be noted in Plate I, Fig. 1, and in greater detail in Figs. 3, 4, and 4a.

Mechanically, the engineer's brake and equalizing-discharge valve provides for a lack of skill in so far as

such devices can be made automatic; but it is essential that the engineer should be possessed of a degree of skill and judgment which will enable him to operate the brakes of his train in a judicious manner, by using them with care and moderation in making ordinary stops, and only in cases of actual emergency to make a quick application.

The attention of the engineer is therefore especially directed to the description of the new engineer's brake and equalizing-discharge valve, and the instructions relating to the proper method of operating the quick-action automatic brakes.

THE AIR-PUMP.

The construction of the air-pump is clearly shown in cross-section in plate 2, Fig. 216. A steam-cylinder 3 and air-cylinder 5 are joined together by a centre-piece 4, which forms the bottom head of the steam-cylinder and the top head of the air-cylinder, while suitable stuffing-boxes 56 therein encircle the piston-rod 10, the lower end of which is attached to air-piston 11, and the upper end to the steam-piston, each of which is provided with suitable packing-rings.

Suitably arranged valves in the walls of the steam-cylinder 3 and its upper head 2, to which further reference will be made, admit steam alternately above and below the steam-piston 10, forcing it upward and downward, giving a similar movement to the air-piston; while air from the outside atmosphere is drawn alternately through the air-inlets and receiving-valves 31 and 33 and forced under pressure through the dis-

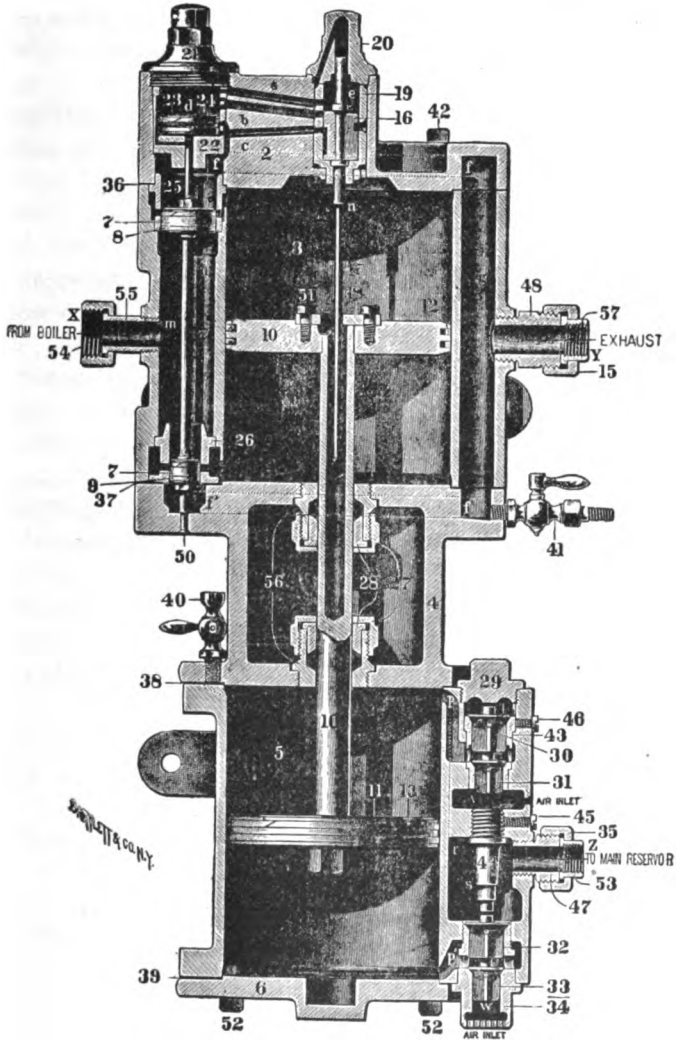
20
19
16
42
36
25
7
8
3
55
X
FROM BOILER
54
31
10
48
57
EXHAUST
Y
15
26
7
9
37
50
41
56
28
40
4
38
29
46
43
30
10
5
31
11
13
AIR INLET
45
35
Z
TO MAIN RESERVOIR
53
47
32
39
6
33
34
52
52
AIR INLET

FIG. 216.

charge-valves 32 and 30, into chamber *S*, and thence to the main reservoir through pipes connecting at the union swivel 53.

The main steam-valve 7 is formed of two pistons of unequal diameter, mounted upon opposite ends of a rod, the upper one occupying cylindrical bushing 25, and the lower bushing 26, each of these bushings having two series of port-holes for the admission of steam to and its exhaust from the steam-cylinder by a reciprocating movement of the main-valve.

Connection with the source of steam-supply is made to the union-nut 54, and with steam in chamber *m*. The tendency of the main-valve, on account of the greater diameter of its upper piston, is to move upward, thus providing for its upward movement and for the admission of steam to the upper side of the steam-piston 10, and its exhaust from the lower side.

The opposite or downward movement is accomplished at the proper moment by the combined action of steam-pressure upon the upper surface of the lower piston of the main-valve and reversing-piston 23, the stem of the latter extending through the bushing 22, in which it operates, and bearing upon the top of the main steam-valve. Pressure upon the upper side of reversing-piston 23 is regulated by a small slide-valve 16 in the central chamber *e*, of the upper steam-cylinder head 2, to which steam-pressure is conducted from chamber *m* through port *h*.

This valve is given motion by a rod 17, which extends through bushing 19 in the upper head and into the hollow main-piston rod 10, and is provided with a

button-head on its lower end, and a shoulder *n* just below the top head; the plate 18 on the steam-piston alternately strikes this shoulder and button-head as the steam-piston 10 approaches the top or bottom head of the steam-cylinder.

Steam from the boiler being admitted to chamber *m* forces the main-valve upward, which uncovers the lower series of ports in bushing 25, and entering the steam-cylinder above the main-piston 10 drives it downward, while steam used on the previous upward stroke is discharged from the under side of the lower main-valve piston through the lower series of ports in bushing 26, which were also uncovered by this upward movement of the main-valve, thence through a suitably arranged passage *f*, shown in dotted lines, communicating with exhaust-chamber *g*, whence it is discharged by a pipe connected at union swivel 57, through the smoke box and stack to the atmosphere. As the main-piston reaches the termination of its downward stroke, plate 18, striking the button-head on the lower end of the reversing-valve rod 17, draws the rod and its valve 16 downward, uncovering port *a* in the upper head and admitting steam above reversing-piston 23, which forces it and the main-valve 7 downward to the position shown in the cut, and permits steam from above the main-piston 10 to be discharged through the upper series of port-holes in bushing 25, thence through passage *ff* to exhaust-chamber *g* and the atmosphere, while live steam is admitted from chamber *m* through the upper series of ports in bushing 26 to the under side of main-piston 10, driving it upward until plate 18 strikes the shoulder *n* of reversing-rod 17, which pushes

valve 16 upward, and brings the small exhaust-cavity in its seat opposite ports *b* and *c*, exhausting the pressure from above reversing-piston 23 into exhaust-passage *ff*, which permits the main-valve to again move upward as previously described.

The upward movement of air-piston 11 causes the lower receiving-valve 33 to lift, and air to be drawn through the series of inlet-ports in the under side of the valve-chamber cap 34, thence past the valve and through port *p'* to the cylinder; the downward movement of the air-piston closes receiving-valve 33, and compresses the air contained in the cylinder to a point in excess of that which may already be stored in the main reservoir, which lifts discharge-valve 32, and permits the compressed air to flow into chamber *s* and to the main reservoir through pipes connected at union swivel 53. The downward movement of the air-piston similarly causes the air to be drawn into the upper end of the cylinder through the upper air-inlet ports to chamber *v* through upper receiving-valve 31 and passage *p*.

The air on this side of the air-piston in being compressed during the upward stroke closes the receiving-valve, and raising upper discharge-valve 30 is forced into chamber *t*, and thence through communication port *r* to chamber *s* and the main reservoir.

The lift of the receiving-valves should be $\frac{5}{32}$ of an inch, and that of the discharge-valves $\frac{1}{8}$.

It is most important that the prescribed amount of lift of air-valves be maintained, and if exceeded by wear from action, which will ultimately occur, should not be permitted to become excessive, in which event valves

and seats may both be ruined by pounding upon each other, while prompt attention may save both, and prevent disagreeable pounding.

In renewing bushing 43 the shoulders upon which it rests in position should be carefully ground in to prevent leakage of air past these, then adjust set-screw 46, when cap-nut 29 may be screwed firmly, but not harshly, upon it.

With 125 pounds steam-pressure, the 8-inch pump when in good condition will compress 0 to 70 pounds pressure of air in a standard main reservoir 26½ inches in diameter by 34 inches long (outside measurement), about 9 cubic feet capacity in 88 seconds, and from 20 to 70 pounds in 62 seconds.

The efficiency of the pump and its condition may therefore be readily ascertained at any time desired.

If other reservoirs are used than the dimensions given, the duty may be calculated in exact proportion.

THE QUICK-ACTION TRIPLE-VALVE.

A large view of the triple-valve in cross-section is shown in Fig. 217, a transparent view of the slide-valve in Fig. 218, and of the slide-valve seat in Fig. 219, to which references will be made in the following explanation of its purpose and functions.

The quick-action triple-valve is wholly automatic in principle, that feature existing in the construction of the plain automatic triple-valve by which its mechanism could be "cut out" or made inoperative, or permitting the use of the "straight-air" or non-automatic form of brake, being entirely omitted.

As its name implies, the quick-action triple-valve is designed to facilitate rapidity of action of the brakes upon railway trains, particularly those of considerable length, where desired.

Simultaneous action, as nearly as possible, is quite necessary to avoid shock consequent upon link or drawbar slack between cars. Such action, however, is only necessary in an emergency, its ordinary action for service applications of the brake being in entire harmony with that of the old-style triple-valves, either method of application being entirely dependent upon the rapidity with which the air is discharged from the train-pipe, and consequently under the control of the engineer.

Under each car in the main train-pipe is a drain-cup forming a tee, from which a branch-pipe extends to the triple-valve, to which it is connected at *A*, and a stop-cock is placed in this branch-pipe for the purpose of rendering inoperative the brakes upon any particular car when occasion requires, by reason of accident to the brake gear or apparatus leaving the main train-pipe unobstructed to supply air to the remaining vehicles.

The opening *B* communicates with a chamber in the cylinder-head, from which a pipe leads to the auxiliary reservoir. The opening *C* communicates with a port in the cylinder-head through which air is conducted to and from the brake-cylinder.

Air from the main reservoir on the engine, being discharged into the train-pipe by the operation of the engineer's brake-valve, enters triple-valve at *A*, and passes thence through ports *ee* and *gg*, to piston-

chamber *h*, forcing the piston 4 to the normal position shown, which it occupies when brakes are released, uncovering feed-port *i*, permitting the air to pass by the piston, thence through port *k* to chamber

QUICK ACTION TRIPLE VALVE.

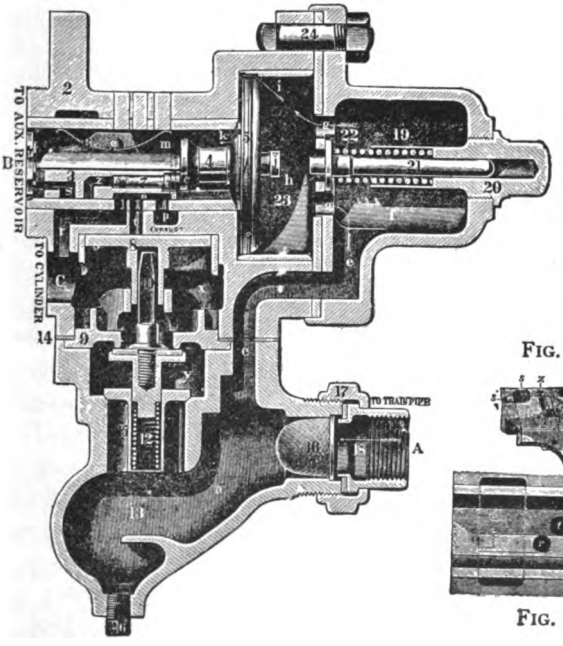

FIG. 217.

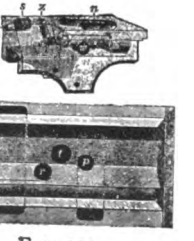

FIG. 219.

FIG. 218.

m, occupied by the slide-valve 3, from which it has free egress at opening *B* to the auxiliary reservoir, charging the latter to the same pressure as that in the train-pipe.

That portion of the stem of the piston 4 between

the shoulders *u* and *c* is semicircular in form, and passes between two flanges of the slide-valve 3, the length of the latter being slightly less than the distance between these shoulders, permitting a limited movement of the piston, without moving the slide valve.

The arrangement of the ports in the latter will be clearly understood by reference to transparent view in Fig. 218. It will also be observed that a corner of the slide-valve opposite ports *s* and *z* is cut away, for reasons that will appear later.

A graduating-valve, 7, is attached to and moves with the stem of the piston 4, and extends into a suitably made recess in the slide-valve, opening and closing port *z* in the slide-valve.

Under ordinary conditions of operating the brakes, by a slight reduction of pressure in the train-pipe the movement of piston 4 in cylinder *h* is limited to the distance between the knob *j* and the end of the graduating-stem 21, the spring 22 resisting further movement, but which may be compressed by the piston, permitting the latter to traverse the entire length of the cylinder *h*, if a rapid discharge of 10 or 12 pounds pressure or more is made from the train-pipe. To apply the brakes gently, a slight reduction of 6 to 8 pounds pressure in the train-pipe is made, causing the greater pressure remaining in the auxiliary reservoir, with which chamber *m* is in constant communication, to force piston 4 to the right, closing feed-port *i*, and moving the graduating valve away from its seat in port *z* until the shoulder *u* on the piston-stem, engaging the slide-valve 3, moves it with the piston

until the latter is stopped in its traverse, by knob *j* meeting the graduating-stem 21, the spring 22 resisting further movement. In this position port *z* is opposite port *r* in the valve-seat, and air from the auxiliary reservoir passes into the brake-cylinder through ports *w*, *z*, *r*, *r* and *C*, forcing the piston outward and applying the brakes.

The pressure in the auxiliary reservoir having now been reduced by expansion into the brake-cylinder to an amount slightly less than that in the train-pipe, piston 4 is forced to the left and graduating-valve 7 to its seat, closing port *z*, the slide-valve remaining stationary, retaining the pressure in the brake-cylinder.

Further reductions of pressure in the train-pipe, as may be desired to apply the brakes with greater force, cause the piston 4 to again move to the right against graduating-stem 21, pulling graduating-valve 7 from its seat, admitting additional pressure from the auxiliary reservoir to the brake-cylinder until entirely equalized in each, or to about 50 pounds, from an original pressure of 70 pounds in the auxiliary reservoir. This effect is caused by a reduction of air-pressure in the train-pipe of about 20 pounds, from which it will be seen that any further reduction is a waste of air, and that the force with which the brakes may be applied is proportionate to the reduction of pressure in the train-pipe within this limit.

The brakes are released by admitting pressure to the train-pipe, which forces piston 4 to the left to the position shown, permitting pressure in the brake-cylinder to escape to the atmosphere through ports *c*, *r*, *r* and ex-

haust-ports *n* and *p*, the latter being cored to the atmosphere around the valve body.

The action of the brakes just described is that used in ordinary station stoppages, and is termed a "service application," and is caused, as will have been observed, by a gradual discharge of pressure from the main train-pipe at the engine.

To apply the brakes with their full force, a quick reduction of the pressure in the train-pipe of 10 to 12 pounds is made, causing the piston 4 to move through the entire length of its cylinder *h*, compressing graduating-spring 22, and bringing port *s* in the slide-valve opposite port *r* in its seat, admitting pressure from the auxiliary reservoir to the brake-cylinder, at the same time the removed corner of the slide-valve 3, before referred to, uncovers port *t* in its seat, admitting auxiliary-reservoir pressure above piston 8, forcing it downward, and emergency-valve 10 from its seat; while train-pipe pressure, lifting valve 15, rushes to the brake-cylinder through the openings made, in a large volume, uniting with that from the auxiliary reservoir, giving a pressure on the piston of about 60 pounds per square inch, from 70 pounds auxiliary-reservoir and train-pipe pressure, or about 20 per cent greater than from a service application of the brakes.

The check-valve 15 closing when the pressure is equalized, prevents pressure from the brake-cylinder re-entering the train-pipe. A restoration of pressure in the train-pipe releases the brakes, as already described, port *t* being brought into communication with exhaust-port *n* of the slide-valve, permitting the air used in forcing piston 8 downward to escape into the

atmosphere, and spring 12 then restores emergency-valve 10 to its seat.

This action of the brake apparatus, as will have been noted, causes a local reduction of train-pipe pressure under each car, by discharging this air into the cylinder for braking purposes, instead of having it wholly pass to the atmosphere at the engine, as was necessarily the case with the plain form of the automatic brake apparatus, economizing the use of air-pressure and producing practically instantaneous action of the brakes throughout an indefinite length of train; but they should be used in this manner in cases of emergency only.

To prevent the application from a slight reduction of pressure caused by leakage in the train-pipe, an oval groove is cut in the bore of the car-cylinder $\frac{9}{64}$ of an inch in width and $\frac{5}{64}$ of an inch in depth, and of such length that the piston must travel three inches before the groove is covered by the packing leather.

A small quantity of air, such as results from a leak, passing from the triple-valve into the brake-cylinder, may have the effect of moving the piston slightly forward, but not sufficiently to close the groove, which permits the air to flow, to the atmosphere past the piston. If, however, the brakes are applied in the usual manner the piston will be moved forward, notwithstanding the slight leak, and will cover the groove. It is very important that the groove shall be of the dimensions given.

The triple-valve should be drained occasionally of any moisture that may accumulate, by the removal of the bottom plug.

In an "emergency" action of the brakes, when, as previously stated, air from the train-pipe is vented into the brake-cylinder, the strong current of air toward the triple-valve carries with it any foreign matter in the air-pipes, and this lodging in the conical strainer 16, at the union of the branch-pipe and the triple-valve, may clog the meshes of the strainer and prevent the free passage of air, and should therefore be cleaned occasionally, but this may be largely avoided if the hose, when not coupled to that on adjoining vehicles, is placed in its dummy coupling and the air-pipes are carefully blown out with steam previous to their erection on the car.

Should a continuous leak manifest itself at the exhaust-port of the triple-valve, or the pressure-retaining valve, it will usually be found to be due to the presence of dirt on the seat of the emergency-valve 10, which should be cleaned.

On account of slight differences in sizes of ports, triple-valves intended for freight or passenger car brakes must not be used in the opposite service.

The passenger-car triple-valve having a letter *P* cast upon its body, may be readily distinguished from that intended for freight service.

THE PLAIN AUTOMATIC TRIPLE-VALVE.

A perspective view of the plain automatic triple-valve and locomotive-tender brake apparatus is shown in Fig. 220, and cross-sections of the triple-valve in Fig. 221, which will clearly show its construction.

It is desirable that this triple-valve be perpetuated

for use with locomotive driving-wheel and tender brakes, to give a slightly slower action to the brakes thereon in cases of emergency action of the quick-action apparatus on the cars.

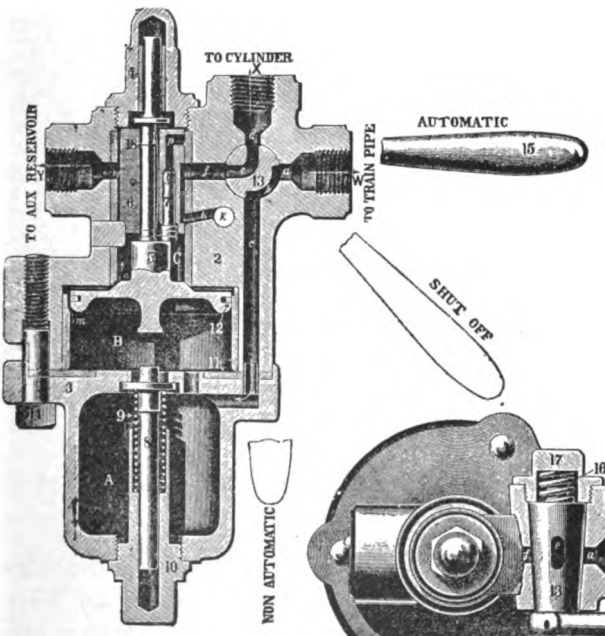

FIG. 220.

FIG 221.

The construction and operation of the plain automatic triple-valve is substantially the same as that of the quick-action form, the quick-action valves being omitted, and pressure used only from the auxiliary

reservoir in applying the brakes, and will not, therefore, require specific description.

As constructed formerly, the handle, 15, could be turned from a horizontal position, which it occupies when the brakes are operated as automatic, to a vertical position, permitting the use of the non-automatic brake; but as this is now practically obsolete, a lug is cast upon this handle which permits it to be turned only to an intermediate position, in which the brakes are inoperative or shut off on that particular vehicle.

To drain the cup 3 of moisture, slack the bottom nut 10 a few turns, let any water escape, and screw it up again. A tender drain-cup should invariably be located in the main train-pipe on the tender to catch and retain moisture, which would otherwise pass to the train-brake apparatus. A cock in this cup readily provides for letting out the moisture, which should be done frequently.

THE ENGINEER'S BRAKE AND EQUALIZING-DISCHARGE VALVE.

The Engineer's Brake and Equalizing-discharge Valve, sectional cuts of which are shown on Figs. 222 and 223, and a plate view in Fig. 224, with a cap-nut 12 and rotary-valve 13 removed, is a device designed especially to assist the engineer in operating train-brakes in a more perfect manner than has hitherto been possible with the three-way cock or brake-valves formerly used for this purpose, without considerable personal skill from the operator.

It is of the greatest importance to perfect train-

braking that gradual exhaust or discharge of air pressure from the train-pipe should be made in applying the brakes under ordinary conditions of station stopping, and a gentle closing or stoppage of this exhaust in order to thoroughly equalize the pressure

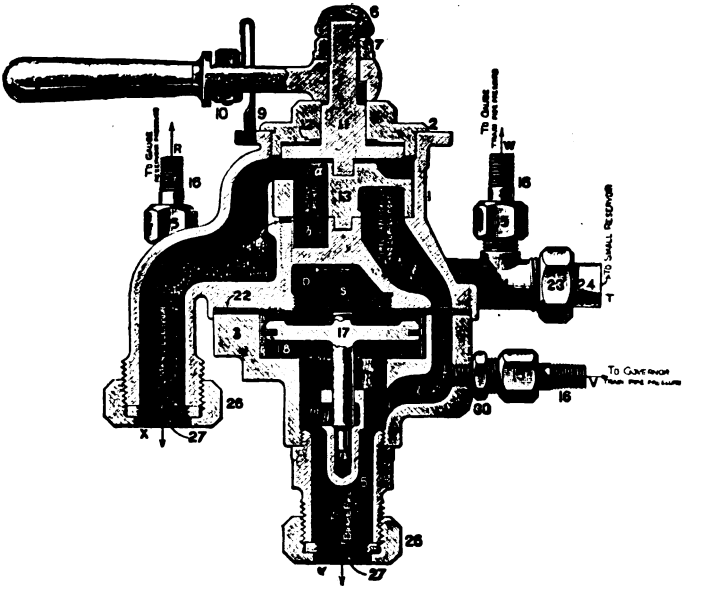

FIG. 222.

remaining in the train-pipe, thus preventing the release of some of the front brakes of the train, which may occur, particularly on long trains, by the abrupt opening and closure of the ordinary three-way cock, which causes a violent surge of air from the rear to the front end of the train, affecting the brakes as stated.

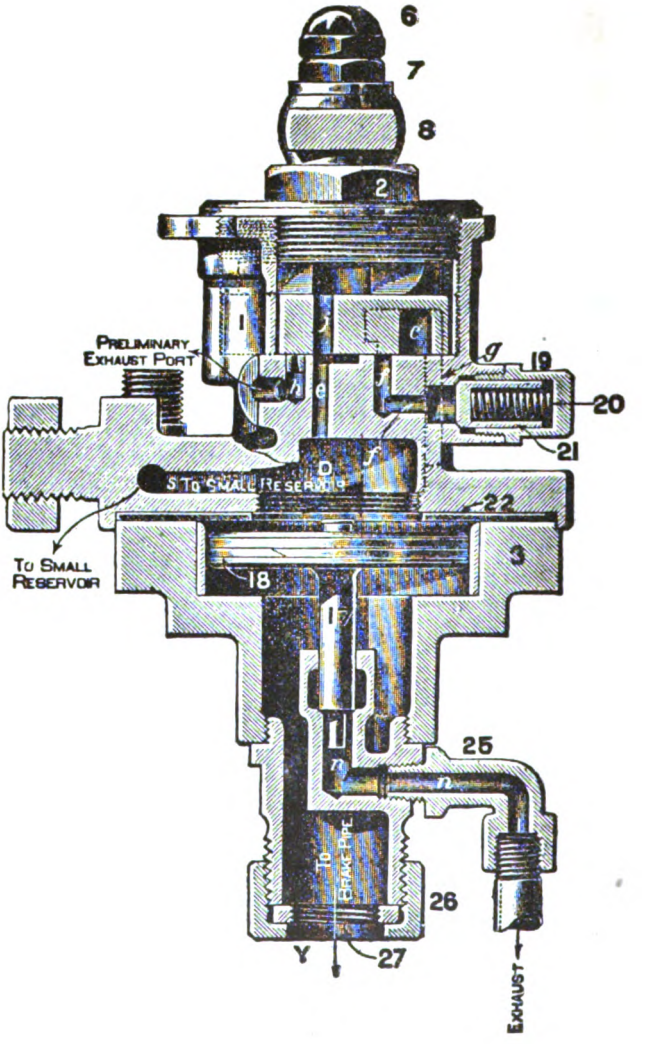
6
7
8
2
1
j
c
g
19
20
21
PRELIMINARY
EXHAUST PORT
h
e
f
D
S TO SMALL RESERVOIR
22
3
TO SMALL
RESERVOIR
18
17
25
n
n
TO
BRAKE PIPE
26
Y
27
EXHAUST

FIG. 223.

The brake-valve here illustrated entirely prevents this, and *mechanically measures the volume of air required to be discharged from the train-pipe and limits the rate of its discharge when applying the brakes for ordinary stoppages*, and is equally efficient on short or long trains.

Large openings are provided in its construction for the instantaneous application of the brakes in an emergency.

It is absolutely essential in operating the brakes upon long trains, and is of great importance on short ones, to store a pressure of air in the main reservoir on the engine of twenty to twenty-five pounds greater than train-pipe and auxiliary-reservoir pressure, which will, when discharged into the train-pipe, insure a prompt release of all the brakes.

A full set of engine-brake fixtures includes a pressure-gauge having two sets of works, and two indicators (red and black) on a single dial, which shows at a glance the presence respectively in the main reservoir and train-pipe, the connecting pipes being attached to the brake-valve at *R* and *W*. The air-pipe to the pump-governor should be connected at *V*, the main reservoir-pipe at *X*, and train-pipe at *Y*.

By preparing a diagram similar to Fig. 225, representing the rotary-valve 13 and handle 8, of tracing-cloth or other transparent material, cutting the ports *a* and *j* out of the diagram on their boundary-lines to show through openings, and then reversing same and placing it upon the seat of the valve, Fig. 224, where it may be rotated at will on its centre, the explanation following may be made clear.

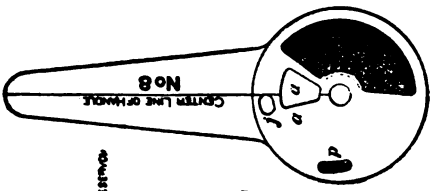

FIG. 225.

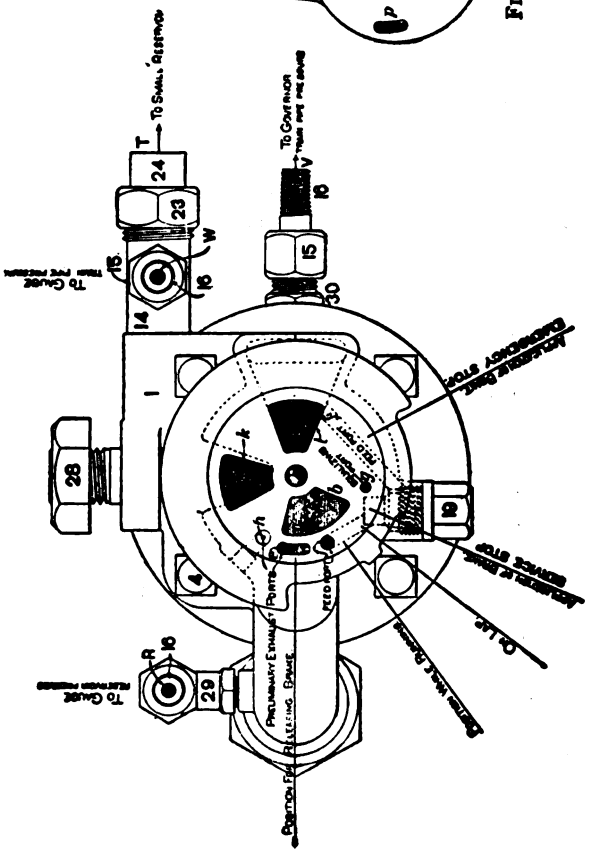

FIG. 224

By reference to cuts of the valve, it will be seen that movement of the handle 8, on which is located a spring 9 for guiding it to position, operates "rotary-valve 13" upon its seat, opening and closing the various ports as required.

When the handle 8 is in "position for releasing the brake," air from the main reservoir entering the brake-valve at *X* passes through "supply-ports" *a* and *b*, thence upward into cavity *c*, in the under surface of the rotary-valve 13, then through "direct application and supply-port" 1 to the pipe at *y*.

While yet in this position, port *j* in the rotary-valve and port *e* in the seat are in communication, and air passes into chamber *D*, above piston 17, thence through port *s* to a small reservoir, which is usually suspended under the right running-board of the engine, pipe-connections being made therewith at *T*. This reservoir serves the purpose of increased volume of space to chamber *D*.

The handle 8 now being placed in "position while running," *direct* communication between the train-pipe and main reservoir ceases, and port *j* is brought opposite feed-port *f*, through which main-reservoir pressure now passes to the under side of the feed-valve 21, which latter is held to its seat by "feed-valve spring" 20, having a resistance of about twenty pounds.

When this additional pressure is accumulated in the main reservoir, "feed-valve" 21 is forced open, the air passing thence through "feed-port" *f'* to port 1 and the train-pipe, while train-pipe pressure is maintained in chamber *D* through port 1, cavity *c* and "equalizing-port" *g*, thus equalizing the pressure above and below

piston 17, the stem of which, forming a valve, is seated in the position shown in "bottom-cap" 5, and permits the escape of air from the train-pipe to the atmosphere through ports *m* and *n* when raised from its seat.

When applying brakes for ordinary or station stops, move handle 8 to "on lap" position. This blanks all ports in the rotary-valve and seat. Then moving the valve-handle to the position "application of brakes, service-stop," the small exhaust-cavity *p* in the lower surface of the rotary valve 13 establishes communication between the two "preliminary exhaust-ports" *e* and *h*, the latter leading to the atmosphere, and after discharging about 8 pounds of pressure as shown by the gauge, restore the handle to "on lap" position.

This preliminary discharge of air from the chamber *D* will cause the piston 17 and its stem to rise, which operation is followed by a discharge of air from the train-pipe to the atmosphere through ports *m* and *n*, applying the brakes gently.

This discharge of air from the train-pipe *continues after the valve-handle is carried to "on lap" position* (gradually equalizing train-pipe pressure), *and until the train-pipe pressure has been reduced slightly lower than that yet remaining in the chamber above the piston*, when the latter is forced downward and its stem to its seat, closing the outlet *n*, and preventing the further escape of air, until the operation is repeated, which may be necessary to apply the brakes with the desired degree of force.

To throw off brakes, push handle 8 to "position for releasing brakes," causing the excess of air-pressure in

the main reservoir to be discharged into the train-pipe, insuring their prompt and certain release.

For an "emergency" application of brakes, push the handle to the extreme right, to position "application of brake emergency-stop." This operation establishes direct communication between the train-pipe and the atmosphere, through the "direct application and supply-port" 1, cavity *c*, and the "direct application and exhaust-port" *k*, applying the brakes with their full force instantly.

When handling trains on down-grades, let the brake-valve handle remain in full release position, except when applying brakes, which will insure the full and prompt recharging of auxiliary reservoirs under cars.

If the engineer's brake-valve bracket is to be located against the boiler-head, it must be made of sufficient length to prevent injury to the valve-gaskets by heat.

After being placed in position on the engine, and before using, it is a good practice to remove valve 13, and wipe its face and seat quite clean of any grit that may have lodged thereon in transit; rub a *little* tallow on the surfaces, and replace.

Care in this respect will prevent the valve and seat from cutting. Any leakage between the valve and seat may result in establishing communication between the several passages or ports therein, and thus prevent the very desirable results for which the valve was particularly designed. When this occurs it is necessary to regrind valve 13, which may be done by carefully facing and scraping the surfaces to a good seat, after which use a *small* quantity of fine-ground glass, sieved

through cloth of close texture, and a little oil. Usually the valve only requires facing.

It is of the utmost importance that *direct communication be made from the engineer's brake-valve to the main reservoir*, instead of connecting to the discharge-pipe leading from air-pump to main reservoir.

The latter practice is very undesirable, as a great deal of moisture and oil is discharged into the train-brake system which would otherwise be deposited in the main reservoir from which it can be readily drained.

A one-inch stop-cock should be placed in the train-pipe, a short distance below the engineer's brake-valve, within convenient reach of the engineer, and should be closed upon all but the leading engine of the train, where two or more engines are coupled in the same train, in order that the head engine may operate the train-brakes.

It is important that the pipe-connections to the brake-valve be perfectly air-tight, and that the valve should occasionally be cleaned. The feed-valve 21 can be readily removed for cleaning by the engineer, by placing the valve-handle in "emergency" application position, which will retain the air in the main reservoir, then unscrewing the cap-nut 19.

This should be done occasionally, as any derangement by which its functions of maintaining an excess pressure in the main reservoir is usually found to be due to the presence of dirt or gum from the use of too much oil or lubricant of an inferior quality. The piston should also be removed for cleaning, at intervals, as the presence of gum interferes with its free movement.

THE PUMP-GOVERNOR.

The construction of the pump-governor is illustrated in cross-section in Fig. 226. Its purpose is to automatically shut off the supply of steam to the pump when the air-pressure in the train-pipe and auxiliary reservoirs has reached the limit allowable, say 70 pounds, this pressure forming the basis upon which the maximum power of the brake-gear used on cars and engines is designed, thus avoiding excessive air-pressure, which, used indiscreetly, will result in sliding wheels. With a judicious use of the brake and maintenance of pressure to the maximum allowable, sliding of wheels may be avoided.

The simplicity of construction of the governor is such that the following description of its mechanism will make it readily understood:

By reference to Fig. 226 it will be seen that suitable provisions are made for attaching the end *Y* of the governor directly to the steam-pipe union connection of the air-pump, the opposite end *X* being piped to the source of steam-supply. Another pipe connection, with union swivel 21 at *W*, is also made and extended to the fitting 30, Fig. 222, in the engineer's brake-valve. This fitting, it will be observed, is tapped into a port of the brake-valve, *which is always in direct communication with the train-pipe, the pressure to be governed*, and which, acting upon the under side of the flexible diaphragm 19, forces it upward against the resistance of the regulating spring 18, when the desired train-pipe pressure has been reached, lifting valve

PUMP GOVERNOR.

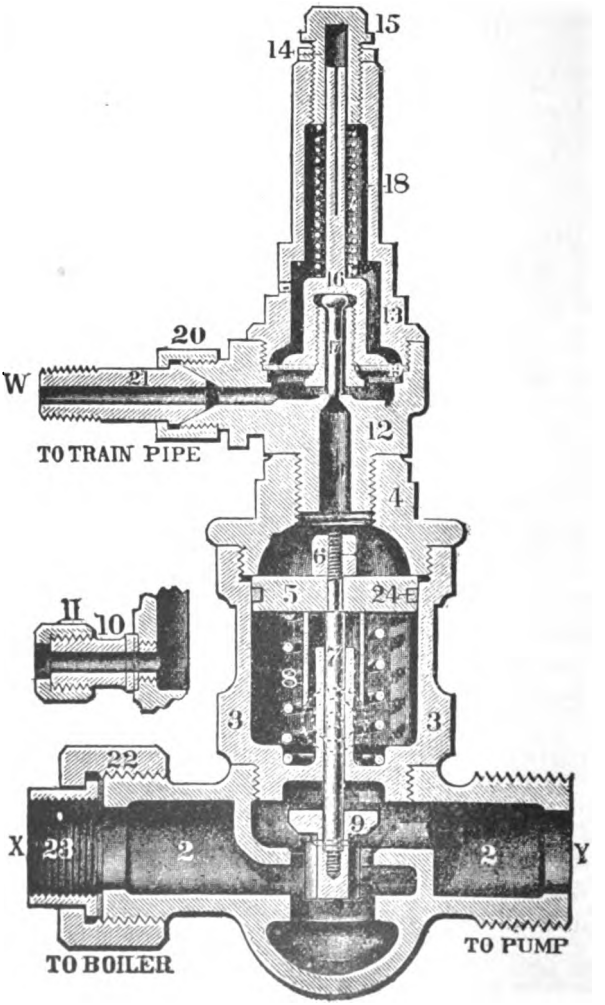

FIG 226.

17 from its seat, admitting air-pressure on top of piston 5, forcing steam-valve 9, with which it is connected by stem 7, to its seat, shutting off the supply of steam.

A reduction of air-pressure in the train-pipe by applying brakes causes a reverse movement of the governor, valve 17 closing, and the pressure contained in the chamber above piston 5 leaking away past its edges to the atmosphere through the exhaust connection 10 in cylinder 3.

Spring 8 then forces the piston upward, opening steam-valve 9, and permitting steam to again pass to the pump. Any necessary adjustment of the regular spring 18 is readily made by means of nuts 14 and 15.

A good quality of lubricant should be continuously fed to the steam-cylinder of the pump while in operation. A small quantity of 32° gravity West Virginia well-oil should be used at intervals in the air-cylinder, it being particularly desirable to use a quality of oil which will cause the least gummy deposit in the air-passages, reducing their dimensions and preventing the free discharge of air in the main reservoir. Tallow, lard-oil, or kerosene must not be used in the air-cylinder.

Attention is drawn particularly to the description of the brake-valve contained in this work, and the fullest advantages should be taken of the opportunity it affords for the correct operation of the brakes.

Care should be taken to discharge six or eight pounds of air by the gauge in the first instance in applying brakes for ordinary stoppages, which will cause the pistons in the brake-cylinders to move outward suffi-

ciently to close the leakage-groove, forcing the brake-shoes lightly against the wheels. Further reductions of pressure may thereafter be made to suit circumstances.

The brakes are fully applied when the pressure in the train-pipe, and as shown on the gauge, has been reduced 20 pounds.

Any further reduction is a waste of air. It is of great importance that the engineer should remember that the gradual application of the brakes is caused by a gentle discharge of air-pressure from the train-pipe to the atmosphere, and that a rapid discharge causes the quick action of the brakes to ensue.

It is therefore essential that he exercise some degree of care and moderation in applying brakes, taking advantage of the emergency action of the brakes only when absolutely necessary to avoid accidents.

Engineers, upon finding that the brakes have been applied by the trainmen or automatically, must at once aid in stopping the train by using the brake-valve as in making ordinary stoppages, which will prevent the loss of pressure from the main reservoir, and enable the prompt release of brakes when necessary.

It is important that the main reservoir be drained of water at regular intervals, especially in moist climates and seasons. As much of this accumulation is condensed from the steam-cylinder and passes into the air-cylinder through imperfectly-packed piston stuffing-boxes, care should be taken to avoid this.

The shoes of driving-wheel brakes should be so adjusted, by means of the cam-screws, that the pistons move from 3 to 5 inches when the brakes are applied.

If cars having different air-pressures be coupled together, the brakes will apply themselves to those having the highest pressures in the auxiliary reservoirs.

To insure the certain release of all the brakes in the train, and also that the reservoirs may be quickly charged, the engineer must carry the maximum pressure in the main reservoir before connecting to a train.

On long down-grades it is important to be able to control the speed of the train, and at the same time to maintain a good working air-pressure.

This is readily accomplished on ordinary gradients, where the pressure-retaining valve is not necessary, by running the pump at a good speed, so that a comparatively high pressure will have been accumulated in the main reservoir while the brakes are on, and which when released enables the auxiliary reservoirs to be speedily recharged before the speed has increased to any considerable extent.

It should be sought to control the train on any grade by the use of the smallest quantity of air possible and the fewest number of applications of the brakes.

QUESTIONS ON 8″ AIR-PUMP, FIG. 216.

What is the purpose of the third or top piston-head?

The third or top piston-head helps to reverse the valve-motion and to force the main piston-head or valves downward so as to open the bottom port.

Which piston-head or valve in main valve-chamber has the larger diameter?

The top one.

Which is the reversing-valve, and where is it situated?

The reversing-valve is the top head of steam-cylinder.

What is the shape of this valve?

It is a small slide-valve.

How is it moved?

By a valve-rod which extends down into the main piston-rod, this rod being hollow. The reverse-valve rod has a shoulder on its end, which comes in contact with a plate on main steam piston-head, which pulls the valve down, and the reverse-valve rod is pushed up by the main piston-rod, by the end of reverse-valve abutting against the main piston-rod.

How does the slide-valve reverse the movement of pump piston-heads?

By letting steam in on top of the third or top piston-head of valve-motion, also by exhausting from the same. Suitable ports are provided for the same.

How is the air-pressure accumulated

By the air-pump.

What are the principal parts of a pump?

The steam-cylinder and the air-cylinder.

Which is the air-cylinder in the Westinghouse Pump?

The bottom cylinder.

How is the air drawn into the air-cylinder?

A piston-head works in the air-cylinder which is fastened to the piston-rod, extending to the steam-cylinder and also attached to the steam piston-head. When the piston goes up and down in cylinder it causes a displacement in the air-cylinder, into which the atmosphere rushes, filling up the air-cylinder.

How is the inlet and outlet of air controlled?

By suitable valves called receiving and discharging valves. (Fig. 216.)

How many small piston-heads are in the steam-valve motion?

Three. Two on the main-valve stem, in the steam-chamber, and the third one is in the chamber above the main chamber. This head has a stem extending through the chamber resting on top of the top piston-head in main steam-chamber.

Why are the piston-heads in main valve-chamber of different diameters?

In order that the piston-heads which serve as valves will move in the direction of the larger head, the steam entering between the heads.

In what do these valves work?

In bushings forced into the chambers.

Why is this done?

In order that the bushing can be renewed without dispensing with the pump when they become much worn.

Describe the movement of the pump in Fig. 216.

As shown in the figure, the steam is entering the lower ports, driving the piston-head upward. The exhaust is passing out the upper ports, into the exhaust-passages around the pump, to exhaust-pipe. The third or top piston-head has steam on the upper side, which has forced it down with the main valves. When the main steam piston-head is near the end of its upward travel, it will strike the reverse-valve rod, and that will move the valve over the ports leading to top piston-head and exhaust the steam from it, when

the main valves will move upward and open the upper ports to drive piston-head downward again.

How is the piston-rod packed in main pump?

By a composition packing.

What is the effect on a pump when this packing leaks badly?

It makes one end of the pump useless, because the air will escape into the atmosphere instead of being forced into the reservoir.

When a pump-piston rod is packed, what is necessary to keep it from burning out?

It should be well lubricated, and kept tight to piston-rod, for if it leaks badly around the piston-rod it will burn the packing out, for the air under a pressure causes a great friction when escaping, which will set the packing on fire. Air under pressure gives off its latent heat.

What are the other causes which make an air-pump run hot?

Running the pump without lubrication in either air or steam end, which causes the rings to cut; too high air-pressure in reservoir, rapid running of pump, and valves gummed up in air-cylinder, which causes an excessive friction.

What causes a pump to stop working?

A reversing-valve rod broken; plate on piston-head loose; piston valve-rings broken or leaking; steam passage to reversing-valve stopped; bottom or air-cylinder piston-head broken off from piston-rod.

THE NINE-AND-ONE-HALF-INCH IMPROVED WESTINGHOUSE AIR-PUMP.

IT will be seen from the cuts of the Nine-and-one-half-inch Pump, here presented, that the valve-motion is entirely in the top head of the steam-cylinder, while in the ordinary eight-inch pump a portion of it is located in the steam-cylinder proper. In repairing the valve-motion it has heretofore been necessary to get at both the steam-cylinder and the top head, but in the new pump, as all of the moving parts are concentrated in the top head alone, its repair is greatly facilitated. A square-top head can be carried on the locomotive and readily substituted for a defective one during a run should there be any necessity for an operation of this kind. The number of parts of the valve-motion has been considerably reduced, and they are less delicate constructively than those used in our standard eight-inch pump.

The principal improvement in the air-cylinder is in the arrangement of the air-valves. Each one is contained in a separate case, and all are made of the same size. It is therefore necessary to carry but one kind in stock for the complete repair of this portion of the air-pump. By this general arrangement the lift of each valve is controlled by an ample contact surface with the cap of the valve-case, or with the case itself, and a change in the lift of one valve has no effect upon any of the others. An air-strainer is provided for the inlet opening, which is on the left side of the pump, and so located as to offer the least chance for taking dust and

cinders in the air-cylinder. In all matters of detail, such as the size of the bolts and proportioning of parts,

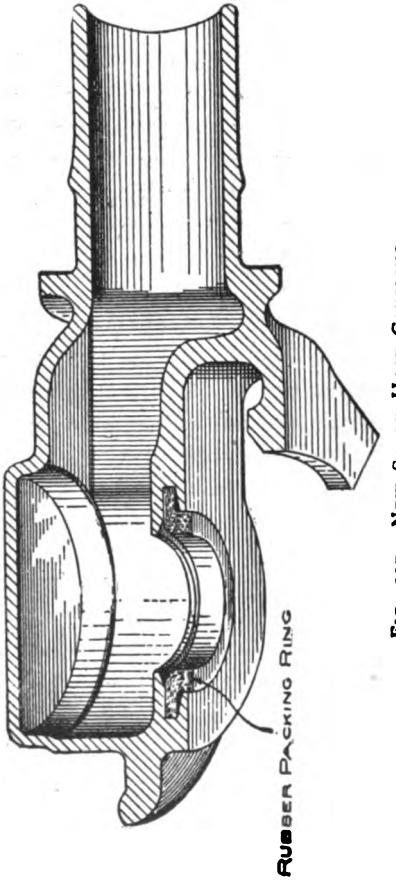

FIG. 227.—NEW STYLE HOSE COUPLING.

great care has been exercised to make them ample for their intended use. We have carefully examined into

the nature of the repairs that we have heretofore furnished on our standard pump, and have been guided by our observations on this point in the character of some of the changes made in detail construction. This pump, as compared with our standard eight-inch pump, has an increased capacity of 65 per cent, and to compress a given amount of air at 90 pounds requires 20 per cent less of steam.

Description.—As will be seen by reference to Figs. 232

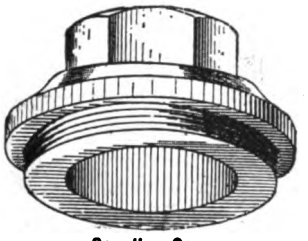

FIG. 228. OLD STYLE.

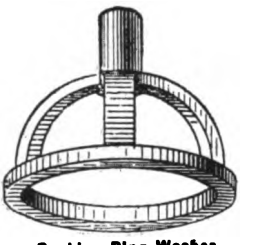

FIG. 229.

and 233, the valve-motion of the pump consist of two pistons 77 and 79 of unequal diameter, mounted on rod 76, while a slide-valve 83, of the D type, held in position between them, provides for the distribution of steam to the upper and lower sides of main steam-piston 65, as required. Steam enters the pump at *X*, where a suitable stud and nut admit of the direct attachment of the pump-governor, and by means of passages *a* and a^1, and port a^2, is admitted to slide-valve chamber *A*, between the two pistons 77 and 79, where, by reason of the greater area of the former, tends to force it to the right to the position in which the valve is shown in

Fig. 232, thus admitting steam to the under side of main piston 65 through port *b* and passages b^1 and b^2, forcing it upward, while the steam previously used on the opposite side in forcing the main piston downward is exhausted to the atmosphere through passage *c*, port c^1, cavity *B* of the slide-valve 83, port *d*, and passage d^1 and d^2 at the connection *Y*, from whence it is conveyed by suitable pipe to the smoke-box of the locomotive.

In Fig. 232*a* is illustrated an outside view of main-

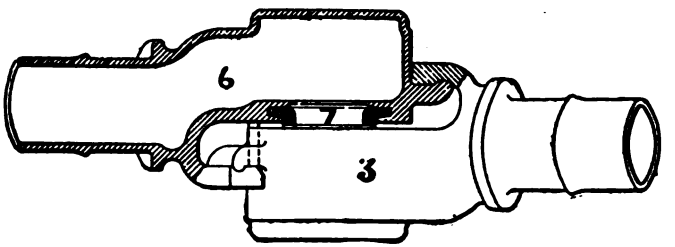

FIG. 230.

valve bushing 75, showing the several ports and steam-passages therein, of which port *t* communicates between chamber *E* in the main-valve head 85 and exhaust-passage f^1, and hence is in constant communication with the outside atmosphere, relieving the pressure on the surface of main-valve piston 79 exposed to chamber *E*. A reversing-valve 72 operates in chamber *C* in the centre of the steam-cylinder head, steam being supplied thereto from slide-valve chamber *A* through ports *e* and e^1, and which is given motion through the medium of a rod 71 extending into the space *k* of the hollow main-piston rod. The duty of this valve is that of admitting steam to and exhausting it from space *D* between main-

valve piston 77 and the head 84, and is shown in Fig. 232 in position to exhaust the steam previously used, from the space *D* through port *h* (Fig. 233), port *h'*, reversing-valve cavity *H*, and ports *f* and *f*¹ to the main exhaust-ports *d* and *d*¹ and *d*².

It will at once be apparent, having described how the surface of main-valve pistons 77 and 79 exposed in

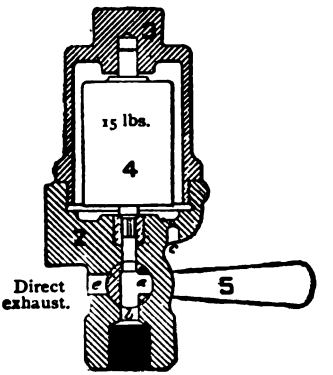

FIG. 231.—RETAINING-VALVE (set).

chambers *D*, and *E*, respectively, being free from pressure other than the outside atmosphere, that the steam on the opposite side in chamber *A* is exerting a force in both directions, but the total force toward the right is greater by the sum of the steam-pressure in chamber *A* multiplied into the difference between their areas. This effect, however, is reversed when the main piston, approaching the upward termination of its stroke, strikes the shoulder *j* of the reversing-valve rod 71, forcing the rod and its valve 72 upward, causing the admission of steam from chamber *C* to chamber *D* through

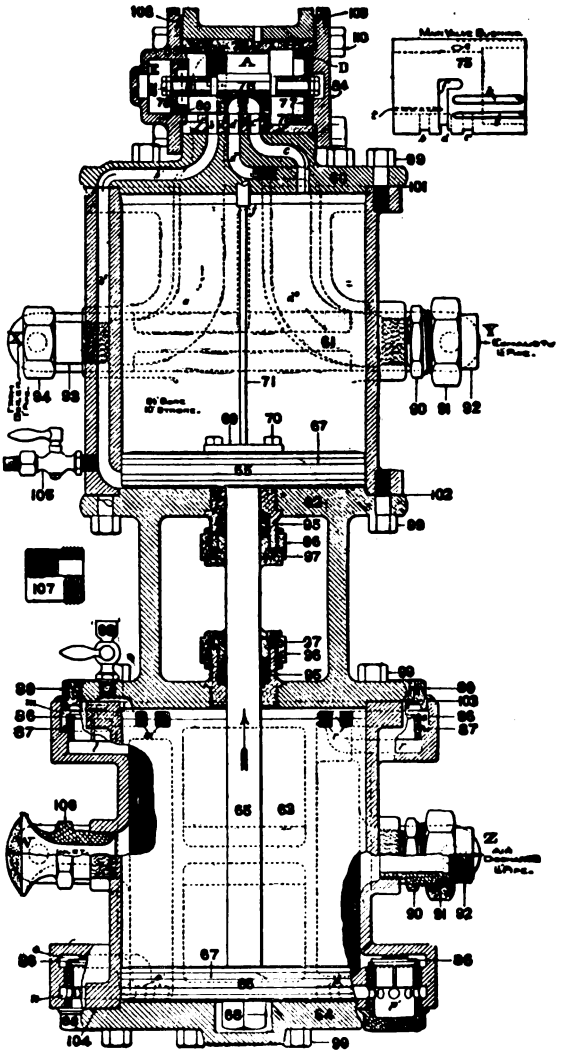

FIG. 232a.

FIG. 232.

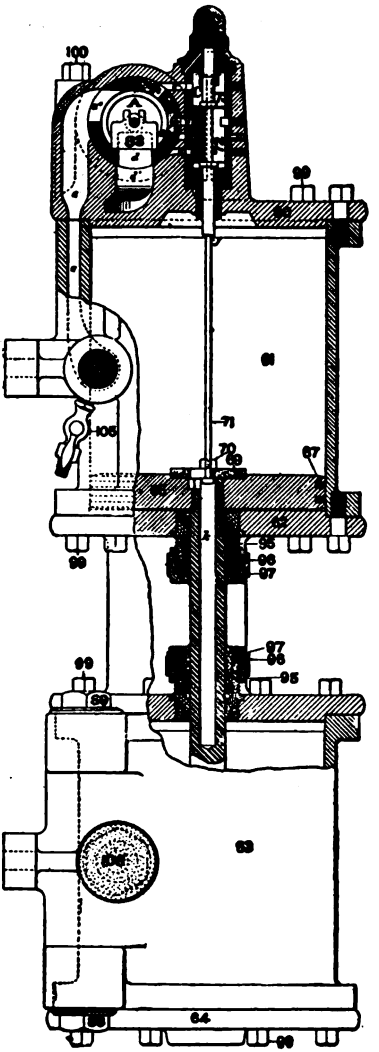

FIG. 233.

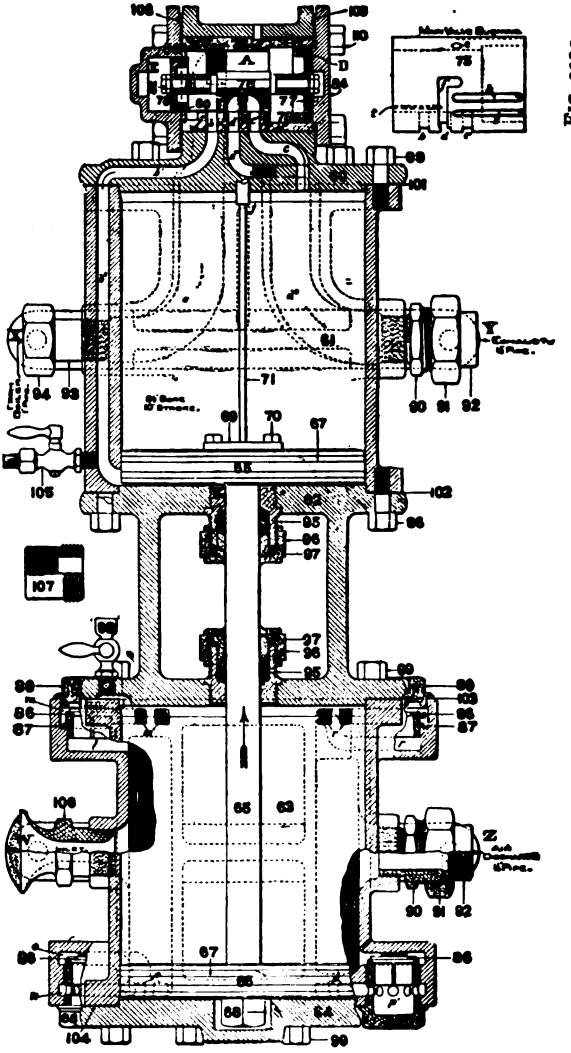

FIG. 232a.

FIG. 232.

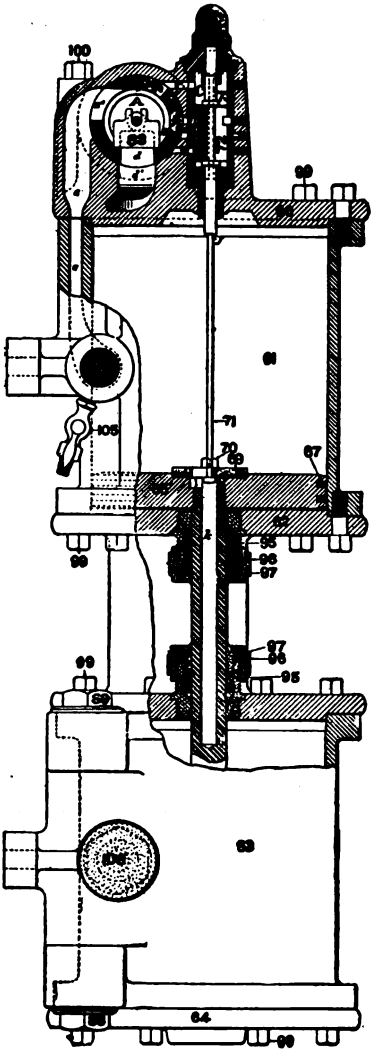

FIG. 233.

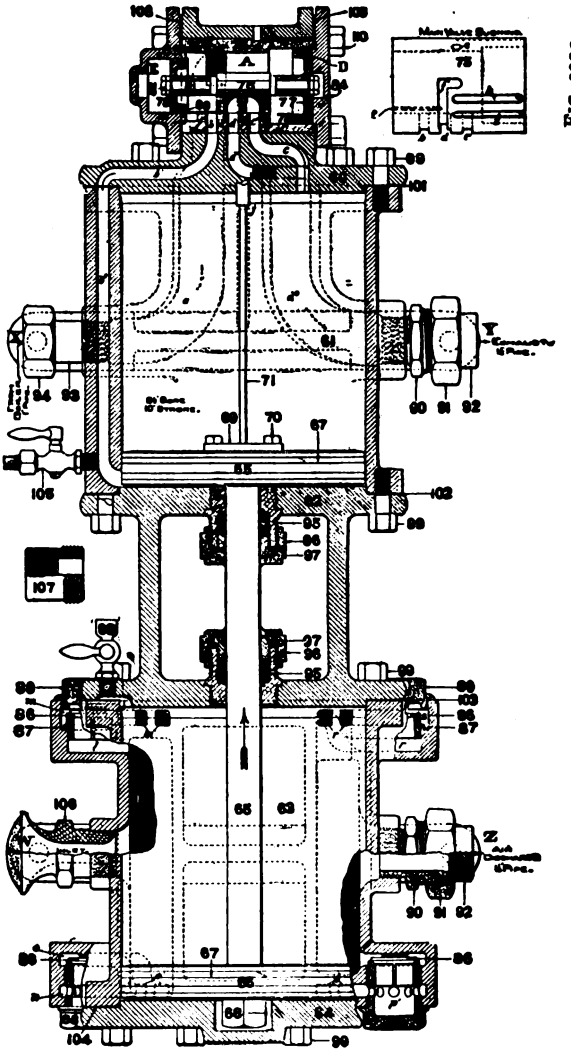

FIG. 232a.

FIG. 232.

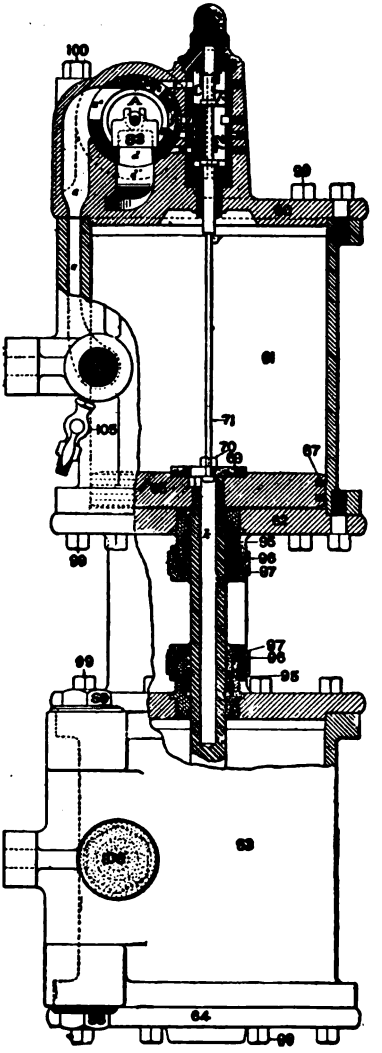

FIG. 233.

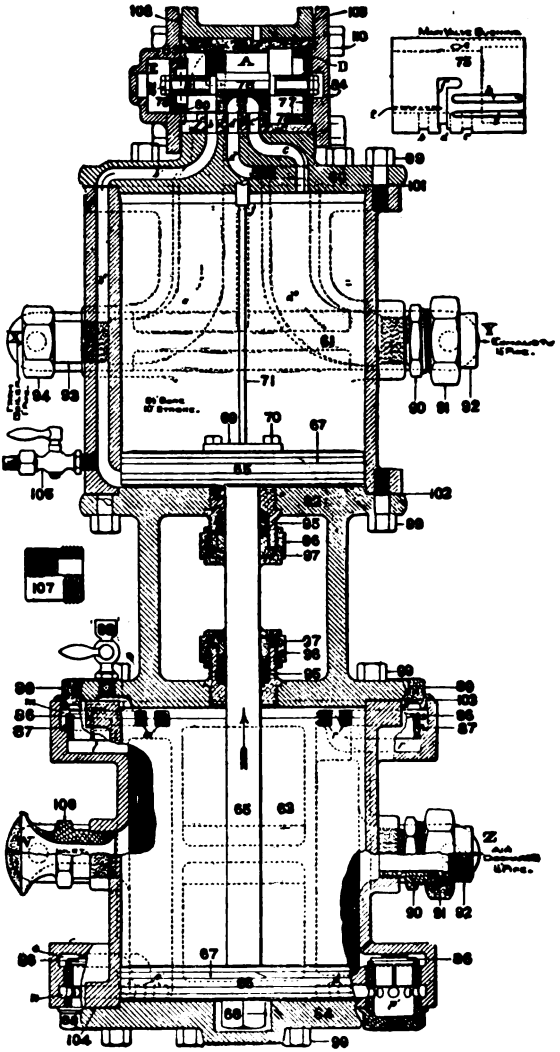

FIG. 232a.

FIG. 232.

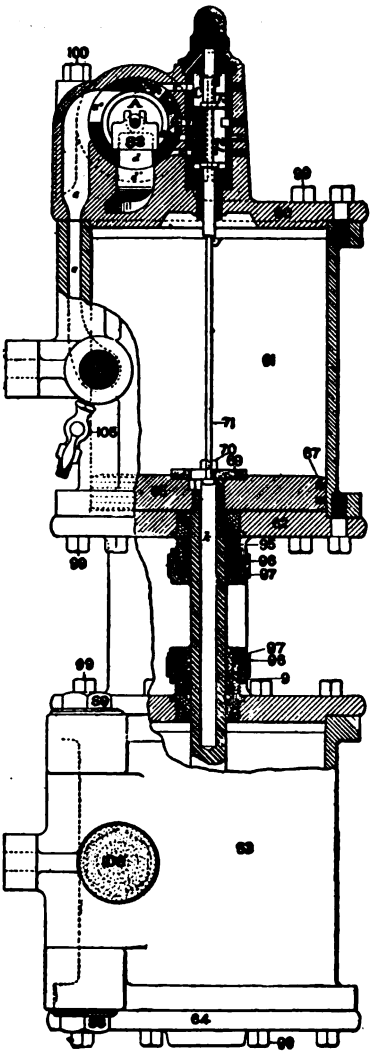

FIG. 233.

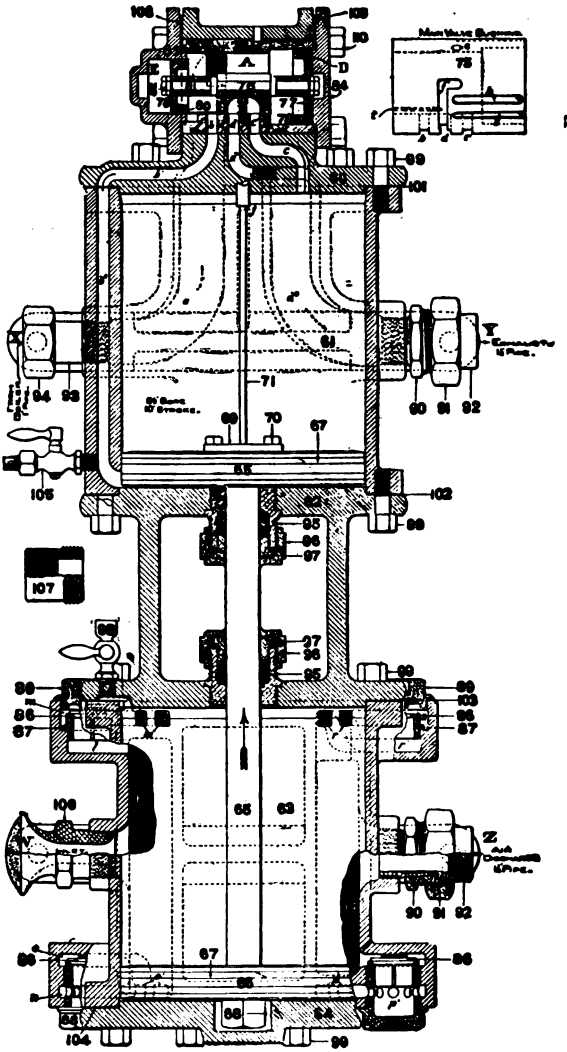

FIG. 232.

FIG. 232a.

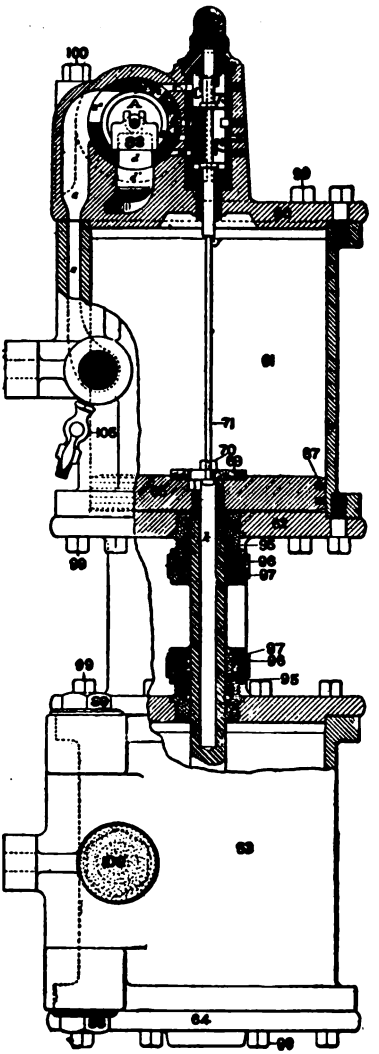

FIG. 233.

ports g and g^1 (Fig. 233), thus balancing the pressure on both sides of main-valve piston 77, when the steam in chamber A, acting upon the effective area presented to it of main-valve piston 79, forces it to the left, and live steam is again admitted to the upper side of main steam-piston 65, exhausting from the opposite side, and forcing it downward until at the lower termination of its stroke the button-head on the lower end of the reversing-valve stem 71 comes in contact with reversing-valve plate 69, again moving reversing-valve 72 to the position shown in Fig. 233, completing the cycle of its movement.

Coincident with the reciprocal movements of the main steam and air pistons, air from the outside atmosphere is drawn alternately into the respective ends of the air-cylinder 63, through the screened inlet 106 at W, chamber F, and receiving-valves 86 to the left, Fig. 232, and from thence discharged under pressure through discharge-valves 86 to the right, Fig. 232 to chamber G and the main reservoir, to which the pump should be connected by one and one-fourth inch pipe at Z. The lift of receiving and discharge valves 86 should be three thirty-seconds of an inch.

THE IMPROVED ENGINEER'S BRAKE AND EQUALIZING-DISCHARGE VALVE, WITH FEED-VALVE ATTACHMENT.

In the construction of the new engineer's brake and Equalizing-discharge Valve, with feed-valve attachment, two important improvements have been made, one operative and the other constructive.

In operation, this valve is so arranged that when the

handle is in "running position" the pressure in the train-pipe is automatically cut off when it reaches 70 pounds, regardless of any higher pressure that may be in the main reservoir, and any loss in the train-pipe, due to leakage, is automatically supplied. The amount of excess pressure to be carried in the main reservoir for the purpose of recharging and releasing promptly is regulated by the pump-governor, which is adjusted to stop the pump when the maximum pressure has been reached therein. The construction of the previous engineer's brake and equalizing-discharge valve (Fig. 223) is such that when the handle is in "running position" the regulation of pressure in the train-pipe is dependent upon the operation of the pump-governor, and the amount of excess pressure in the main reservoir is controlled by what is called an excess-pressure valve, but which is more accurately described as a valve for creating a predetermined difference of pressure between the main reservoir and train-pipe. This valve is usually so adjusted that when a pressure in the main reservoir of 20 pounds in excess of that in the train-pipe is reached it will open and supply air to the train-pipe, but no communication between the main reservoir and the train-pipe exists until this difference in pressure is secured. It is therefore evident that when the handle of the engineer's valve is returned to "running position," after having been placed in full release position (in which latter position the pressure in the main reservoir and train-pipe equalizes), it is necessary to accumulate an excess pressure of 20 pounds in the main reservoir before air can pass the excess pressure-valve to supply any deficiency in the

train-pipe, due to leakage or the charging of auxiliary reservoirs.

From the above explanation it will be seen that the differences in operation between these two valves are:

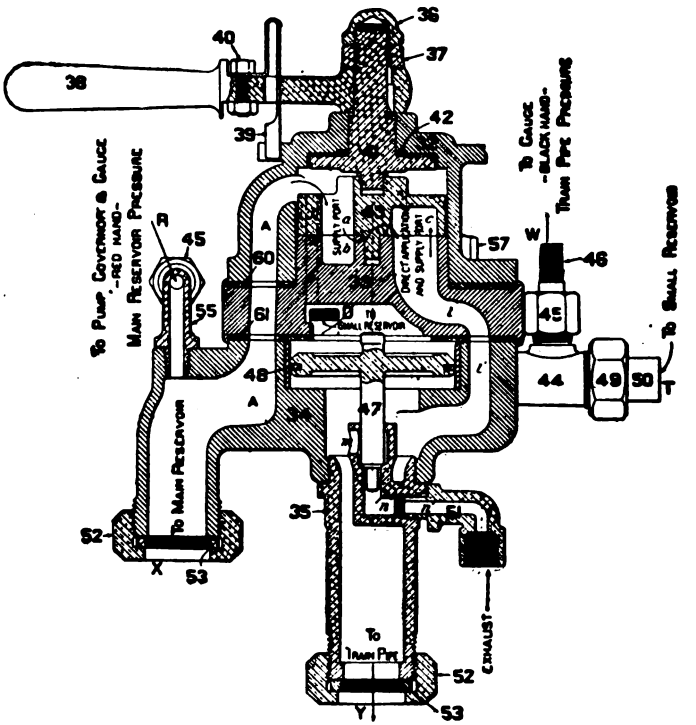

FIG. 234.

First. With the new valve air is automatically supplied to the train-pipe until 70 pounds pressure is reached, if there is a pressure of 70 pounds or greater in the main reservoir. Train-pipe pressure in the pre-

vious valve is regulated by the pump-governor. It therefore dispense with the pump-governor for the purpose of controlling train-pipe pressure with the new valve.

Second. With the new valve, when the handle is in "running position," provision is made for constantly supplying the train-pipe with air for any loss of press-

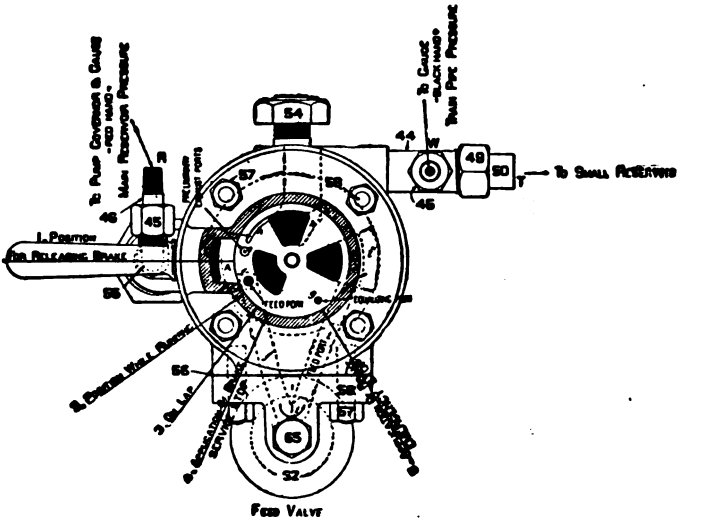

FIG. 235.

ure due to leakage at the pipe-joints, or from other sources. With the old valve it is necessary to have an excess pressure in the main reservoir of not less than 20 pounds before air can be supplied to the train-pipe for the purpose of compensating for leakages when the handle of the valve is in "running position."

Third. With the new valve, the only duty of the

pump-governor is to regulate the degree of excess pressure in the main reservoir, and as this may, and often should be, varied within considerable limits, the sensitive and delicate operation of the pump-governor is not essential. A desired variation of excess pressure is readily had by an adjustment of the tension-nut of the governor-spring. With the old valve the governo regulates train-pipe pressure, and accurate adjustment is imperative to accomplish effective braking. Excess pressure is regulated by the tension of a spring controlling an excess-pressure valve, and cannot be changed except by the substitution of different springs and a readjustment of the pump-governor.

Constructively, the principal feature of the new valve is an opportunity for the removal of all of the operative portions for inspection or repair, without breaking or disturbing any of the pipe connections. The main rotary valve and its seat are made of different metals which reduces the effect of wear to a minimum.

Description.—Pipe connections must be made to the main reservoir at *X*, to the train-pipe at *Y*, to the equalizing-reservoir at *T*, and to the duplex gauge at *R* and *W*, respectively for main reservoir and train-pipe pressures. The gauge-pipe from *R* should be extended to the air-pump governor, which latter device should be set to stop the pump at 85 to 100 pounds pressure, thus providing for an excess pressure of 15 to 30 pounds above standard train-pipe pressure of 70 pounds per square inch. The amount of excess pressure required depends upon the length of trains and character of the road—whether level or with long and severe gradients. Ordinarily 15 to 20 pounds excess pressure

is ample for the safe operation of brakes on the ordinary railway.

While the handle is in position 1, "for releasing brakes," * air from the main reservoir enters the brake-valve at *X*, passing through ports *A*, *A*, thence through port *a* in the rotary valve 43 to the port *b* in its seat 33, thence upward into cavity *c* of the rotary valve, and finally to ports *l* and *l*^{1} and the train-pipe at *Y*. Port *j* in the rotary valve and *e* in its seat are in register in this position, and admit air to chamber *D* above equalizing-piston 47, and passing thence through ports *s* and *s*, charges the small equalizing-reservoir connected at *T*. The train-pipe and auxiliary reservoirs of the brake apparatus being charged, the handle 38 of the brake-valve being moved to 2, "position while running," ports *a* and *b*, and *j* and *e*, are no longer in communication, and air then reaches the train-pipe through port *j* in the rotary valve 43, and ports *f* and *f*^{1} in its seat 33, passing thence through feed valve 63 to port *i*, ports *l* and *l*^{1} to the train-pipe, and continues to flow thereto until the pressure in chamber *B* upon diagram 72 exceeds the resistance of spring 68, and, forcing the diaphragm and its attachments downward, feed-valve 63 closes until such time as by reason of any leaks in the train-pipe the pressure therein has been reduced below 70 pounds, when the valve 63 is again automatically pushed open by the diaphragm rising, replenishing train-pipe pressure. Equalizing-port *g* is now in communication with chamber *D*, maintaining train-pipe pressure therein, through ports *l*^{1}, *l*, and cavity *C* in the rotary-valve 43. The

* See Figs. 235 and 236.

necessary adjustment of spring 68 is readily accomplished by means of adjusting-nut 70, to which access is had by the removal of cap check-nut 71.

To apply the brakes the handle 38 of the valve is moved to position 4, "application of brake—service stop," bringing into conjunction port *p* (a groove in the under side of rotary valve 43) and ports *e* and *h* (the latter also a groove) in its seat, causing air to any desired extent to be discharged to the atmosphere from the chamber *D* above piston 47 and the equalizing-reservoir, through the large direct-application and exhaust port *k*, thus reducing the pressure above piston 47 and causing that in the train-pipe below to force it upward from its seat, permitting air to flow from the train-pipe through ports *m*, *n*, and *n*' to the atmosphere through exhaust-connection 51. The desired reduction of pressure in chamber *D* being made, the handle of the valve is moved backward to position 3, "on lap." It must be borne in mind that after the handle of the valve has been moved to lap position air will continue to flow from exhaust-fitting 51 until the pressure in the train-pipe has been reduced to an amount approximating that in chamber *D*. Ordinarily, a reduction of 6 to 8 pounds pressure by the gauge from chamber *D* is sufficient to apply the brakes in the first instance slightly, and will cause a corresponding reduction of train-pipe pressure by the rising of piston 47, which latter, when such reduction has taken place, is automatically forced to its seat by the preponderance of pressure on its upper surface from air remaining in chamber *D*.

The release of the brakes is effected by moving the

valve-handle 38 to "position for releasing brake," causing air from the main reservoir to again freely flow

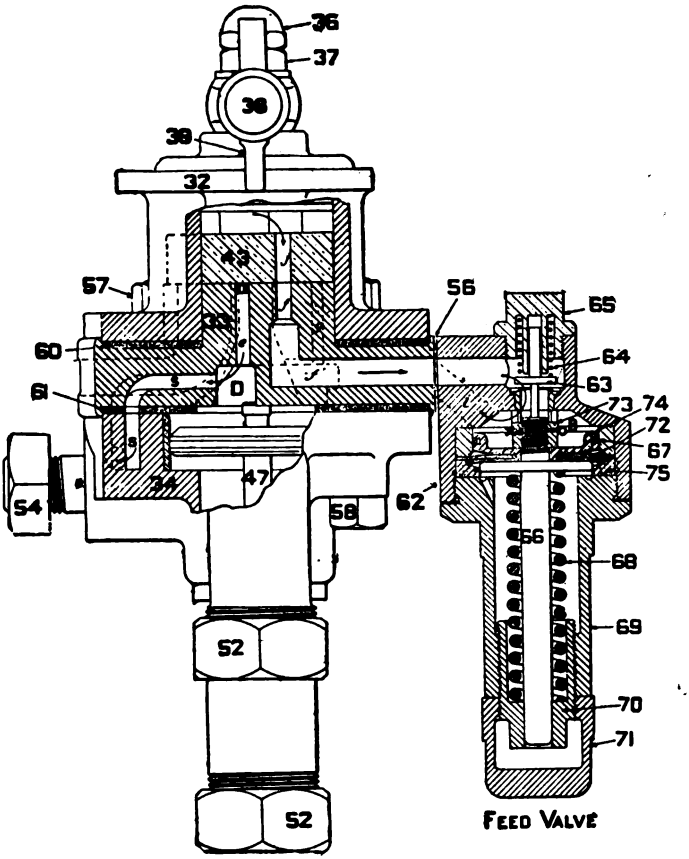

FIG. 236.

to the train-pipe, forcing the triple-valve pistons to release position, and exhausting air used in applying

the brakes and recharging the auxiliary reservoirs. While the handle of the valve is in this position a "warning-port" of quite small size causes air from the main reservoir to be discharged to the atmosphere with considerable noise, attracting the engineer's attention to his neglect to move the valve-handle to "running position." The engineer must move the handle of the brake-valve from position 1 to position 2 prior to the accumulation of the maximum pressure of

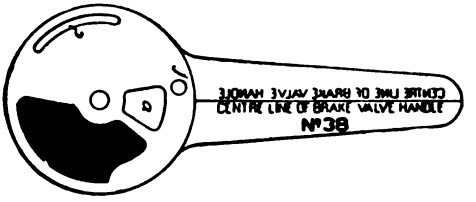

FIG. 237.

70 pounds allowed in the train-pipe, so that the feed-valve attachment may properly perform its functions of governing train-pipe pressure; otherwise the privileged pressure in the train-pipe may be considerably augmented, which must be carefully avoided. With trains of ordinary length it will be found that the brakes can be readily released and the auxiliary reservoirs promptly recharged by simply returning the handle to "running position" (2).

For an emergency application the handle 38 of the brake-valve is moved to the extreme right, position 5, "application of brake—emergency-stop," when "direct-application and exhaust port" *k* and "direct-application and supply port" *l* are brought into conjunction by means of a large cavity *c* in the under surface of the

rotary valve 43, thus admitting of the discharge from the train-pipe of a large volume of air to the atmosphere, causing the quick action of the brakes. Such action, however, should be employed only in an emergency. A reduction of 20 to 25 pounds pressure in the train-pipe at the brake-valve is sufficient to apply the brakes to their maximum, and any further reduction of pressure is consequently a waste of air. It will be noted that this valve is manipulated in the

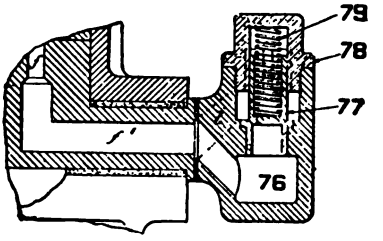

FIG. 238.

same manner as the preceding pattern, and that additional instructions in this respect to engineers are unnecessary.

An excess-pressure-valve arrangement, illustrated in Fig. 238, may be substituted for the feed-valve if desired, restoring that feature substantially as arranged in the Fig. 223 form of engineer's brake-valve, and in that event the pump-governor should be similarly connected to the train-pipe, and for which purpose suitable provision is made when new brake-valves are ordered accordingly.

By preparing a diagram of tracing-cloth or gelatine similar to Fig. 237, and placing it in a reversed position

on Fig. 235, where it may be rotated on a centre, the foregoing explanation may be followed with ease by those interested.

In erecting the valve on a locomotive it should be placed at a reasonable distance from the boiler, in order to prevent its gaskets drying out and shrinking, and care taken to make the pipe-joints absolutely tight. After it has been erected, and all of the connecting pipes have been carefully blown out, it is advised that rotary valve 43 be removed and a little tallow be rubbed on its surface and its seat, then replaced. The valve should occasionally be removed and cleansed of the gummy deposits which will be found thereon, the extent of which will be determined by the amount of oil used in the air-cylinder of the pump.

THE THREE-FOURTHS-INCH IMPROVED PUMP-GOVERNOR.

The improvements in the new Three-fourths-inch Pump-governor illustrated have been dictated largely by past experience, and it is believed the source of complaints in earlier constructions have been entirely eliminated.

Three notable changes have been made:

First. The adjusting-spring has been made more substantial and resilient, and consequently more sensitive to variations in pressure.

Second. The form of steam-valve has been modified to lessen the abrading effect of steam and the obstruction of its passage to the pump.

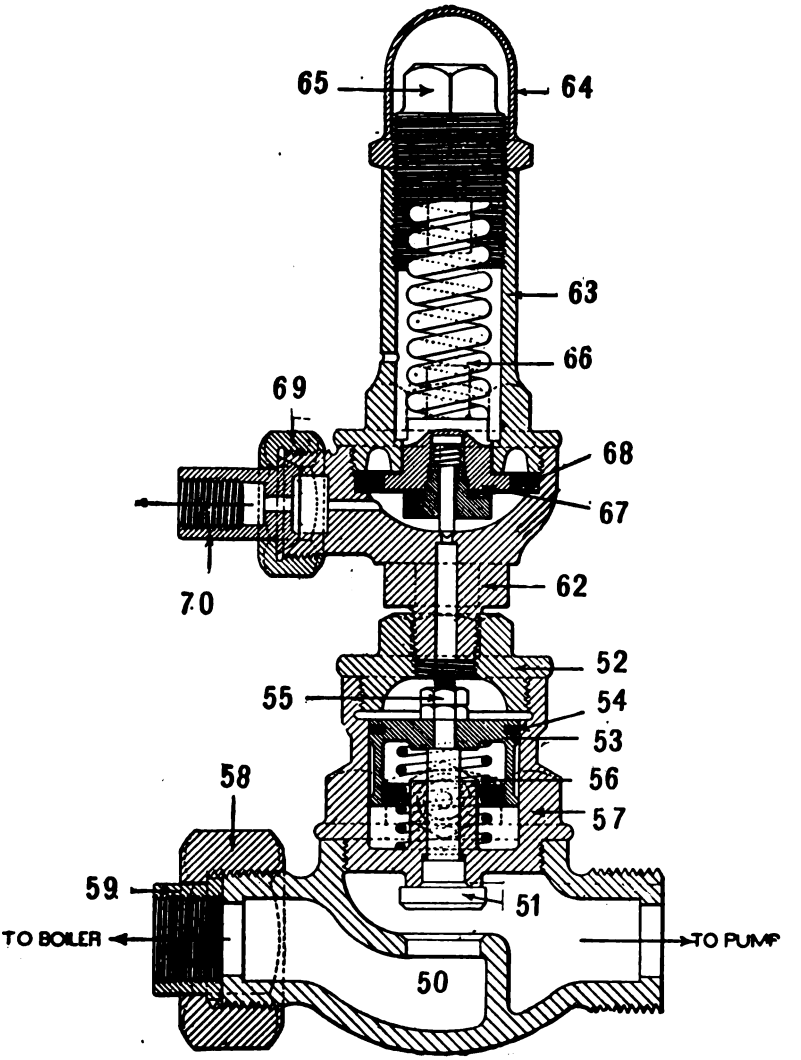
65
64
63
66
69
68
67
70
62
52
55
54
53
58
56
57
59
51
TO BOILER
TO PUMP
50

FIG. 239.

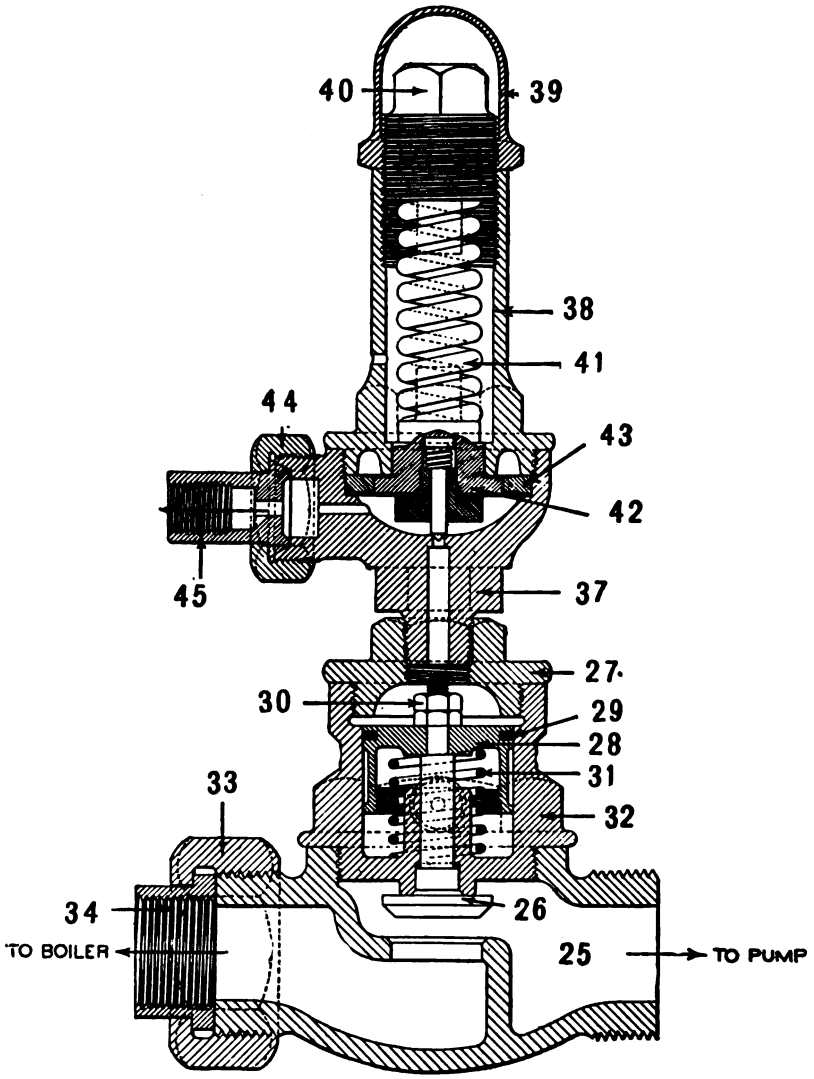

FIG. 240 *

* 1-INCH GOVERNOR.

Third. The diaphragm is composed of two thin sheets of metal, making it more sensitive to variations of pressure than with the single plate formerly used, and is supported by metallic walls in such a manner as to make its distortion under extreme pressures practically impossible.

Description.—Air under pressure entering the governor at fitting 70 acts upon the under side of the diaphragm 67 and forces the latter upward when the maximum pressure for which the governor has been ad-

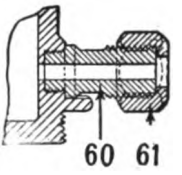

FIG. 241.

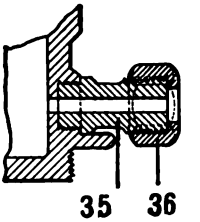

FIG. 242.

justed has been reached, lifting the small conical-shaped valve attached from its seat, and admitting air above piston 53, forcing the latter and its steam-valve downward, shutting off steam to the pump. By relieving the pressure under the diaphragm, in operating the brakes, the conical valve referred to is again seated, and the pressure in the space above piston 53 leaking away to the atmosphere past the piston and through fittings 60 and 61, steam-pressure under the valve 51, aided by spring 56, forces the steam-valve open to its normal position shown in the illustration, again admitting steam to the pump.

When the pump-governor is used in connection

with an engineer's brake-valve fitted with a feed-valve, the union swivel 70 must be connected by suitable pipe to the main reservoir, and likewise must be connected to the train-pipe when used in connection with an engineer's brake-valve having an excess-pressure valve in its construction. In either case suitable attachments are provided on the brake-valve.

If the governor is attached to the train-pipe, it should be adjusted to stop the pump at 70 pounds pressure per square inch; if coupled to the main reservoir, it should be adjusted to stop the pump at 85 to 100 pounds pressure, as the amount of excess pressure required is dependent upon the length of trains and the character of the road—whether level, or with long and heavy gradients. Ordinarily 15 to 20 pounds excess pressure is ample for the safe operation of brakes on the ordinary railway.

Required adjustments of the governor for desired pressures at which it will stop the pump are readily made by means of regulating-nut 65, to which access is had by the removal of cap-nut 64.

HIGH-SPEED BRAKE.

This brake is due to the fact that train-speeds are increasing, and also the weights. It is evident that if the brake were adjusted to brake a train making 70 miles an hour, and that pressure were retained when the speed was reduced to 50 miles or less, the wheels would become locked and slide on the rail and be flattened. It is to overcome this objectionable feature that the brake was put on the market, and was thoroughly tested on the Empire Express on the New York Central and Hudson River Railroad. The idea is to have

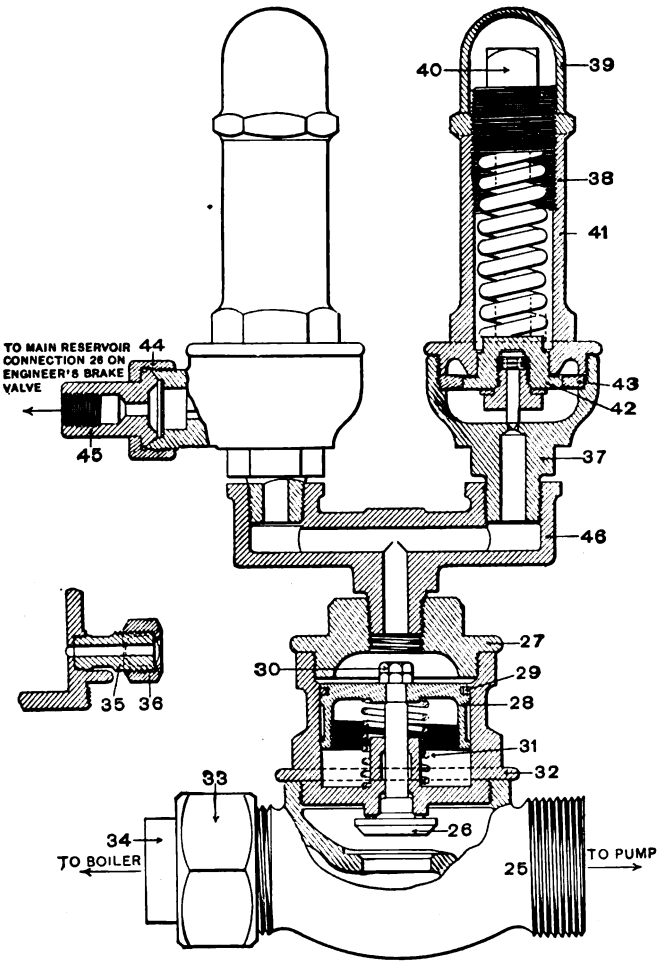

FIG. 243. — DUPLEX GOVERNOR.

an increase of pressure when the brake is first applied, or at the highest speed, and then a gradual release to a certain predetermined pressure. This feature is added to the quick-acting automatic brake. Fig. 244 shows a diagrammatic view of the high-speed brake from engine to passenger coach in detail. There are several ways in which the excess pressure can be applied to the brakes: by using two brake cylinders or doubling the pressure, which is adopted in the quick-acting brake. The governor regulating main air-pump is a duplex, and arranged to be set at different pressures (see Fig. 243). The small stop-cock must be closed when operating the high-speed brake. Attached to the engineer's brake-valve is a duplex feed-valve which is attached to the running-board of the engine and some distance away from the valve. The usual feed-valve is attached directly to the engineer's brake-valve. This valve is constructed as shown in Fig. 236, but differs as a whole in having two feed-valves with a reversing-valve between them, with pipes leading from the engineer's valve to this reversing-valve which controls the air to either one of the feed-valves, so when desired to use in high-speed brakes the valve set at 100 lbs. would be used, and the other, set at 70 lbs., used when running at ordinary braking pressure. Attached to each brake-cylinder is an automatic pressure-reducing valve, adjusted to retain 60 lbs. of air in cylinder. And where cars are not provided with automatic pressure-reducing valves, a safety-valve is provided as shown in Fig. 244. The valve-body is bushed and contains a piston-valve to which is attached a stem on each side of the piston. The upper stem has two

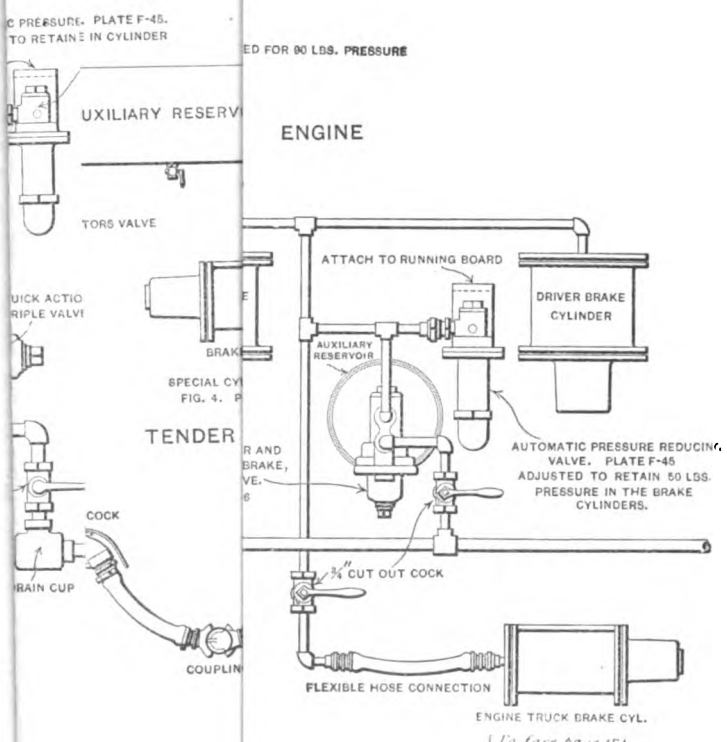

[To face page 474

shoulders, between which is placed a slide-valve similar to the usual triple valve. This valve slides on a seat which has a small port to the atmosphere; in the valve is an exhaust cavity. Leading from the brake-cylinder to the chamber in which slide-valve operates there is a pipe, so that whatever pressure is in the brake-cylinder will be in this valve-chamber. The piston-valve is also exposed to the brake-cylinder pressure. Below piston is a spring-box containing a spring having an adjusting nut to adjust the spring to the desired pressure. The stem works in a bushing which acts as a guide for the stem and holds the spring. This valve is attached to any convenient point on the car. The detail, names, and numbers are given in Fig. 245. The safety-valve is of much simpler construction but of similar action. In this case a conical valve and seat are used, having a stem and spring on the top, with an adjusting nut to set the spring; the valve is screwed directly into brake-cylinder head, the pressure of brake-cylinder being directly on the under side of valve, while the upper side is open to the atmosphere. A special triple valve is applied for high-speed brakes to operate the engine driver and truck brakes.

OPERATION OF HIGH-SPEED BRAKES.

When the brakes are applied when making a stop of high speed the pressure would be at 100 lbs. in the train pipe and auxiliary reservoir; this pressure would be admitted into the brake-cylinder, and if the engineer held his brake on application position the automatic pressure-reducing valve would take care of the

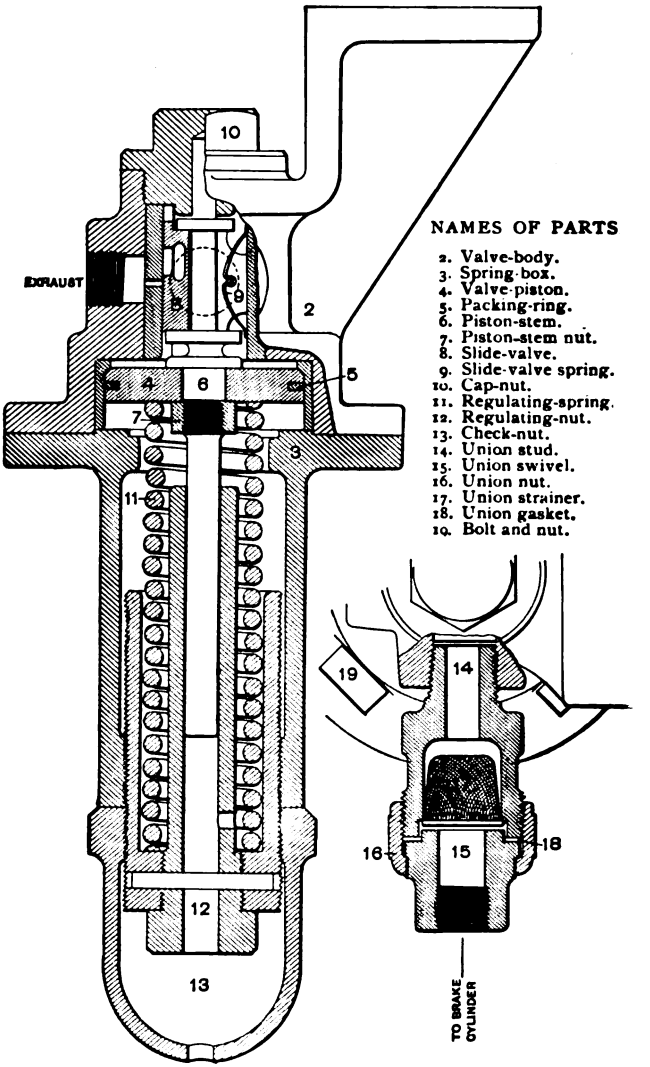

FIG. 245.—AUTOMATIC PRESSURE REDUCING-VALVE.

pressure in the brake-cylinder and prevent the excessive pressure from locking the wheels as the speed was reduced in this manner.

As shown, the reducing-valve is set to retain 50 lbs. of air in the brake-cylinder, so that when the high pressure is admitted to the brake-cylinder it will act on the piston-valve of the pressure-reducing valve and force it down so the exhaust port in the slide-valve comes over the exhaust port. This will allow a reduction of pressure in the brake-cylinder until the spring closes the exhaust port at 50 lbs., and retains that pressure until the engineer releases his brake; so it gives a high-speed braking pressure momentarily with a gradual reduction. The safety-valve acts on the same principle. The exhaust opening from pressure-reducing valve is very small, thus allowing a gradual reduction of pressure instead of a rapid one, a feature incorporated in a patent allowed the author on an automatic pressure-retaining and reinforced brake-valve.

TRAIN-SIGNALLING APPARATUS. (Fig. 246).

Improvements over the older style of train air signalling apparatus have taken place so as to warrant a description necessary to keep abreast with the improvements. The system consists of a reducing-valve, a signal-valve train line of pipe and hose connections, with a car discharge-valve in each car for the conductor to use, a cord being attached for that purpose in the car. This system does away with the cord connection between each car, and also the defects due to that feature well known to those who have forgotten to disconnect and given the signal to go ahead. Wet

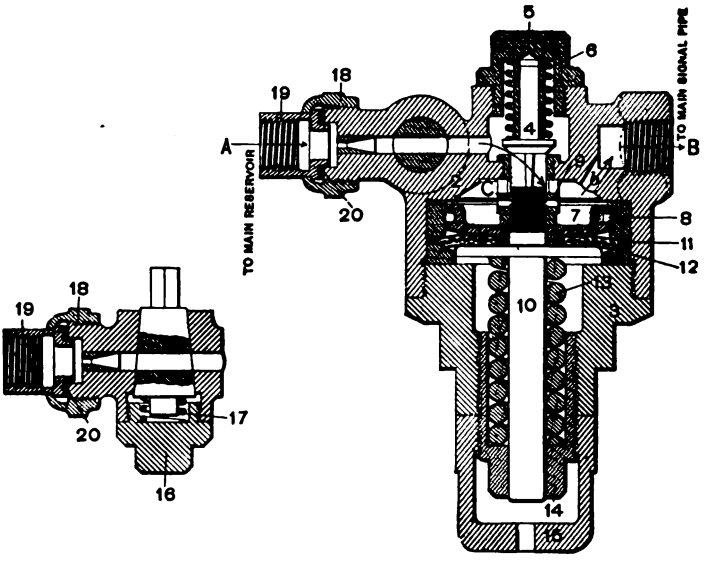

FIG. 247.—REDUCING-VALVE.

NAMES OF PARTS.

2. Reducing-valve body.
3. Lower cap.
4. Supply-valve.
5. Supply-valve cap-nut.
6. Supply-valve spring.
7. Reducing-valve piston.
8. Piston packing-ring.
9. Piston-nut.
10. Piston-rod.
11. Diaphragm (two pieces).
12. Diaphragm-ring.
13. Regulating-spring.
14. Regulating-nut.
15. Check-nut.
16. Cock cap-nut.
17. Cock-spring.
18. Union nut.
19. Union swivel.
20. Gasket.

weather and uncertain signals also make the bell-rope a nuisance.

The reducing-valve is somewhat different from those first brought out. (See Fig. 247.) The reducing-valve body contains a bushing of brass in which moves a piston-valve. This valve is made perfectly air-tight by a packing-ring; attached to it are a stem and a shoulder. The stem or piston-rod is enclosed in the lower cap and surrounded by a coil spring which abuts against the lower side of the shoulder on the piston-rod, exerting an upward pressure. The piston-valve is screwed to the piston-rod. In the upper part of the valve-body is a wing-valve having a seat which divides the body into two chambers. This valve has a stem which is surrounded by a coil spring and works in a cap-nut guide. Leading from the upper chamber is a passage having a stop-cock; this portion of the valve is attached to the pipe leading to the main reservoir on the engine. Between the piston-valve and the shoulder on piston-rod is a diaphragm composed of two pieces. Leading from the chamber above the piston-valve is a port which opens to a pipe connection leading to the main signal-pipe and train.

When the pressure in main signal-pipe becomes less than 40 lbs., the spring under the piston-valve forces the piston-valve and rod up, which raises the supply-valve off its seat and allows air to come into main signal-pipe through the ports, as indicated by the arrows; then when the pressure becomes 40 lbs. the piston-valve will be forced down, leaving the supply-valve seated, thus cutting off the supply of air from main reservoir, and keeping it at the predetermined

pressure, the small spring on top of the supply-valve helping this valve to act.

The stop-cock is used to cut off the valve for repairs, etc.

SIGNAL-VALVE. (Fig. 248.)

Attached to the main signal-pipe is a signal-valve which is also carried on the engine, generally under the

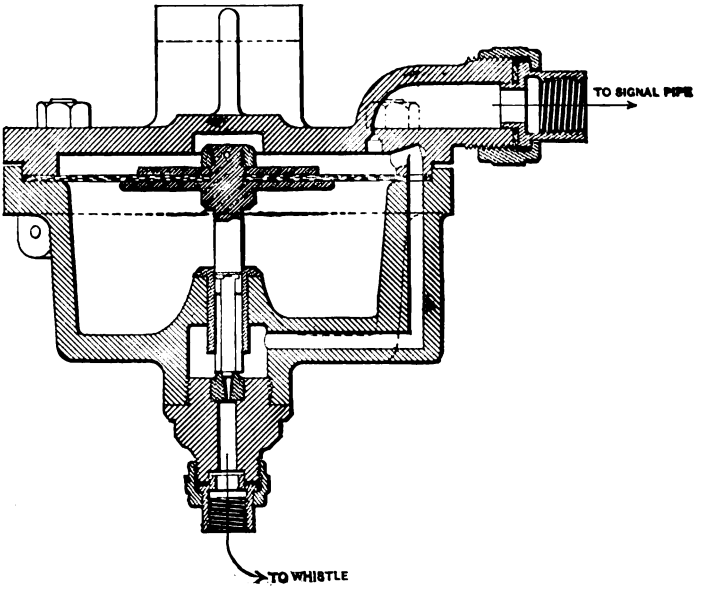

FIG. 248.—SIGNAL-VALVE.

foot-board. This valve-body is divided into compartments or chambers by a diaphragm, a port leading around from one side of the diaphragm to the other. There is also a small port leading from the upper side of diaphragm to the pipe connection to main signal-

pipe. Attached to the diaphragm is a stem which abuts against a valve having a seat in the lower part of the valve-body. The port around diaphragm leads into this seat-chamber. This valve opens into the whistle-pipe. The air that enters the signal-valve can equalize on both sides of this diaphragm. This signal-valve differs somewhat from the old valve, and there is no storage reservoir attached.

CONDUCTOR'S CAR-VALVE. (Fig. 249.)

This valve is placed in each car or at the end; it has a stem on each side working in guides; the under side has a spring which holds the valve against the seat; the upper stem projects through and is adjacent a lever having two pins or fulcrums which engage the hooks or curved arms of the valve-lever. The cord is attached to this lever, and no matter on which side the lever is pulled the valve will open. This valve is attached to the main signal-pipe.

OPERATION OF SIGNAL SYSTEM.

When the conductor's valve is opened it permits some air to escape from the main signal-pipe and above the diaphragm of the signal-valve on the engine; the air which was in the chamber under the diaphragm forces the diaphragm up, which unseats the valve leading to the whistle on the engine, thus allowing air from the signal-pipe to blow the whistle as many times as the conductor's valve is opened. This should not be done too quickly after each signal to make it distinct, as the signals become one long whistle if done too quickly.

NAMES OF PARTS OF CAR DISCHARGE-VALVE.

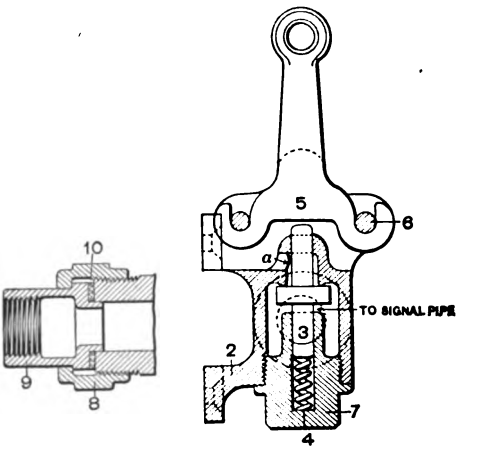

FIG. 249.—CONDUCTOR'S VALVE.

2. Discharge-valve body.
3. Discharge-valve stem.
4. Discharge-valve spring.
5. Discharge-valve handle.
6. Stop-pin.
7. Cap-nut.
8. Union nut.
9. Union swivel.
10. Union gasket.

THE MASON AIR-BRAKE PUMP-REGULATOR.

This regulator is designed to automatically control the air-pressure in the brake system for operating the brakes on railroad cars. It is placed in the steam-supply pipe leading to the air-pump, and regulates the amount of steam passing to pump, and allowing the pump to run just sufficiently to maintain the desired air-pressure in the train service-pipe.

*Description.**—The principle on which the Mason Air-

* Figs. 250 and 251.

brake Regulator works is that of an auxiliary-valve 8, controlled by the air-pressure from the train service-pipe, through the medium of a metal diaphragm 24, and admits steam from the initial side of regulators through a port to operate a piston 19, which in turn opens the

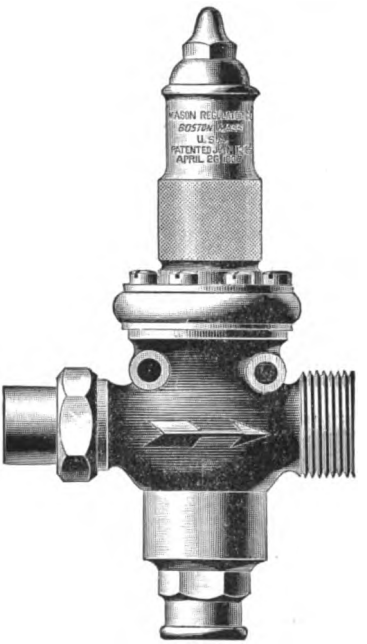

FIG. 250.—GENERAL VIEW OF MASON PUMP-REGULATOR.

main-valve 21, and admits steam to the pump. By referring to the sectional view, it will be seen that the steam enters the regulator at the side marked "steam from boiler," a small portion of it passing up through the passage *XX* to the auxiliary-valve 8. This valve

8 is forced open by the compression of the large spiral spring 5 acting on the cricket through the diaphragm. This cricket 6 has three studs projecting down from the rim, which pass through three loosely fitting holes in the bonnet, the lower ends resting on a button 11 which sits on the diaphragm, so that in opening the valve 8 the diaphragm is also forced down. As soon as the valve 8 is opened, steam passes through and into port *Z*, down under piston 19. By raising this piston 19 the main-valve 21 is opened against the initial pressure, since the area of valve 21 is only one half of that of piston 19. Steam is thus admitted to the pump. A connection with the main air-pipe is made as indicated; and by a passage air enters the chamber below the diaphragm, which carries the cricket 8, as before stated. When the pressure in the air-pipe 16 and chamber *O* has risen to the required point, which is determined by the tension of the spring 5, the diaphragm is forced upward by the air-pressure in the chamber, carrying with it the cricket 6, and allowing valve 8 to close, shuttin goff the steam from piston 19. The main-valve 21 is now forced to its seat by the initial pressure, shutting off steam from the pump and pushing the piston 19 down to the bottom of its stroke. The steam beneath this piston exhausts freely around it — the piston being fitted loosely for this purpose—and passes off into the pump. The leakage past the auxiliary-valve 8 passes up under the cricket and out into the spring-case, where it makes its escape down through the cricket-holes to the upper side of the diaphragm and into the drip. It will be seen from this that when the pressure in the

brake-pipe has reached a predetermined point the pump will be automatically stopped; and when the

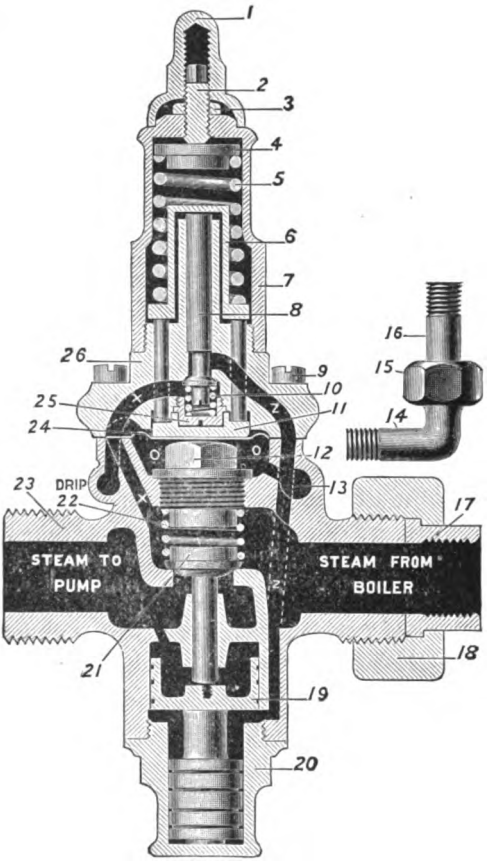

FIG. 251.

pressure in the brake-pipe is reduced by applying the brakes the pump will quickly produce a surplus press-

ure in the main reservoir to insure the speedy release of the brakes and recharge the auxiliary reservoirs. The piston 19 is fitted with a dash-pot, which prevents chattering or pounding when the air-pressure is suddenly reduced.

Directions for Attaching the Regulator.—Place the regulator in the steam-supply pipe to the pump, and so that steam will flow through it in the direction indicated by the arrow cast on the body. With a small pipe make a connection from the train-pipe to the air-pressure connection 15 and 16 on regulator. The one-eighth-inch tapped hole marked "Drip" must be left open, but it may drip from either side by reversing the plug.

Before connecting the regulator to pump, the steam-pipe should be thoroughly blown out, in order to expel all dirt. If the piping is new, steam should be allowed to flow through slowly for some little time, in order to burn off all gummy oil and grease, which would otherwise be carried into the regulator, and thus clog the working parts.

When ready to start, open both steam and air valve wide, then remove the cap 1 which screws over the screw 2, slack off the jam-nut 3, and with the key gradually screw down the adjusting screw 2 until the desired air-pressure is obtained. The regulator is then properly set. Screw the jam-nut 3 down firm and replace the cap 1.

If the regulator should fail to hold the desired pressure, it will probably be due to the fact that some dirt or chips from the pipe have lodged on the seat of the main-valve 21, or possibly under the auxiliary-valve 8.

To open the regulator proceed as follows: Shut off both steam and air pressure from the regulator. Remove the cap 1, and with the key unscrew the adjusting-screw 2 until all tension is removed from spring 5. Then take out the screws 9, and remove bonnet 7, diaphragm 14, and button 11. Take out the plug 12 and the spring 22. The threaded rod which accompanies each regulator can then be screwed into valve 21, which should work easily. Pull out this valve and examine both valve and seat, cleaning them thoroughly. Then insert the rod through the valve-stem guide, screw it into the piston 19, and see if it works up and down easily. It will not be found possible to raise it suddenly, as the dash-pot piston 20 will restrain it. After pulling up, let go of the rod suddenly, and if the piston drops easily it is all right. In case it does not, unscrew the dash-pot cap 20 from bottom of the regulator, pull out the piston 19, and clean it with kerosene or spirits. If it seems somewhat tight, rub it with fine emery-cloth, being very careful to thoroughly wipe it off before replacing. Before screwing on the bonnet, examine the auxiliary-valve 8. To do this, remove the slot-headed plug 25 in bottom of bonnet, also the small spring 10. The valve 8 can then be taken out and examined. This valve should work perfectly free. In taking out the plug 25 there may be a burr, caused by the screw-driver, which should be dressed down before replacing, as this plug forms a guide to centralize the diaphragm button 11, which should fit over it freely. In replacing the bonnet 7, be sure that the zero-marks on the side and those on the body correspond; also see that the diaphragm 24 is

replaced so that the port-holes in it correspond with the holes in the body. Carefully clean the diaphragm as well as the place where it makes its seat. Do not use washers or gaskets of rubber, or any other compound, in making connections. They will burn, and the pieces will get into the regulator. Two copper gaskets are sent with each regulator for making the steam connections.

THE NEW YORK AIR-BRAKE SYSTEM.

The New York Air-brake is perfectly interchangeable with the Westinghouse equipment, and cars equipped with either brake can be indiscriminately mixed in a train and handled with equal facility by the engine equipment of either system; or a New York air-pump, triple-valve, etc., can be used in connection with the Westinghouse apparatus, and *vice versa*. This perfect interchangeability permits any railroad company to adopt the New York Air-brake apparatus either wholly or in part without interfering in any way with its method of operating, and thus the greater efficiency and durability of the New York apparatus can be readily secured without incurring the annoyances which would ensue if the brake were not interchangeable with the Westinghouse system now in general use.

The New York Quick-action Air-brake consists of the following principal parts:

1. The *Duplex Pump*, which compresses the air. The duplex action is extremely easy working, and gives much greater efficiency than the ordinary single-acting

pump, while the construction is very simple, and every valve can be readily examined by unscrewing a plug. The advantages of such simple construction, both in convenience and durability, are evident. Another advantage is that the steam-cylinders are at the bottom, and therefore the drainage is perfectly natural, while the air-cylinders are above the steam-cylinders, thus insuring clean and dry air, as impurities and the condensation from steam-cylinders cannot leak into the air-chambers.

2. The *Main Reservoir*, in which the compressed air is stored on the engine, and in which a greater pressure is maintained than in the other reservoirs or train-pipe to assist in releasing the brakes promptly.

3. The *Engineer's Equalizing-discharge Brake-valve*, which regulates the flow of air into the train-pipe and auxiliary reservoirs to charge the train and release brakes, and from the train-pipe to the atmosphere for applying brakes. The New York Engineer's Valve is less complicated, and its operation easier to understand than the valves heretofore used, and is so constructed that the use of a separate "equalizing-reservoir" is entirely avoided.

4. The *Train-pipe*, which leads from the main reservoir to the engineer's-valve, and thence throughout the train, supplying air to the apparatus on each car. Variations of the pressure maintained in the train-pipe causes the apparatus on each car to operate so as to apply or release the brakes.

5. The *Auxiliary Reservoir*, which receives air-pressure from the train-pipe, and stores it for use on each car

or engine, the air being allowed to pass into the brake-cylinder when an application of the brakes is desired.

The brake-cylinder, which forces the shoes against the wheels when air-pressure from the auxiliary reservoir is admitted against the piston, the end of the piston-rod being suitably connected to the brake-levers. Around the piston-rod, inside of the brake-cylinder, is a large spring, which is compressed by the action of the piston when applying brakes, and which expands when the brakes are released, thus causing the piston to recede to its former position and draw the shoes away from the wheels.

7. The *Quick-action Automatic Triple-valve*, which is connected to the train-pipe, auxiliary reservoir, and brake-cylinder, and is so constructed that variations of pressure in the train-pipe will operate it, causing a moderate application of the brakes or an instantaneous and forcible application, as desired. The operation is as follows: When the train-pipe pressure is reduced five pounds or more the auxiliary reservoir is cut off from the train-pipe, and air-pressure is admitted from auxiliary reservoir into the brake-cylinder proportionately to the reduction of train-pipe pressure. A sharp reduction of the train-pipe pressure of fifteen or twenty pounds produces the same effect, and also admits air direct from the train-pipe into the brake-cylinder, thus applying the brakes instantly, and with about 20 per cent greater force than when the train-pipe pressure is not utilized in this manner. The quick reduction of train-pipe pressure at each car by this means rapidly operates the valves on succeeding cars, so that the

action of all brakes in the train is practically instantaneous.

The following are also parts of the brake equipment:

The Plain Triple-valve, which is used only on engine and tender. It is of the same construction as the quick-action valve previously described, except that the emergency or quick-action parts are omitted, leaving only the service mechanism.

As the valves on locomotive and tender are always the first to receive pressure, and it is not desirable to have the locomotive and tender brakes operate before those on the train, the plain triple-valves are always used here, as they answer the requirements perfectly.

The Pump-governor, which regulates the amount of steam supplied to the pump, and shuts off steam when the maximum air-pressure has been accumulated in the train-pipe and reservoirs.

The Duplex Air-gauge, which shows simultaneously the pressure in the main reservoir and in the train-pipe.

The Conductor's Valve, which is placed in passenger cars and connected with a cord running the entire length of the car, so that any of the trainmen, by pulling this cord, can open the valve, which allows the air to escape from the train-pipe and apply the brakes. It is intended for use only when it is desirable or necessary to stop the train without depending upon or waiting for the engineer to do so.

The Couplings, which are attached to rubber hose, and connect the train-pipe from one car to another.

The Pressure-retaining Valve, which is used upon

freight cars for retaining about fifteen pounds pressure in the brake-cylinders while descending heavy grades. It is a weighted valve of such size that fifteen pounds pressure is required to raise it, and is connected by suitable piping to the exhaust-port of triple-valve. It is provided with a small cock, and when handle is placed in horizontal position the air issuing from exhaust-port of triple-valve when brakes are released has to lift the weight before escaping to the atmosphere, and as this does not affect the working of the triple-valve, the brakes will remain on and check the speed of train while the auxiliary reservoirs are recharging. With handle turned down the brakes release as usual, the escaping air having a free passage to the atmosphere without passing the weighted valve.

DUPLEX AIR-PUMP.

Fig. 252 shows the No. 1 duplex air-pump, which is adapted for passenger and light freight locomotives. The duplex action is extremely easy, and gives much greater efficiency than the ordinary single-acting pump.* The steam-cylinders are underneath the air-cylinders, which allows natural drainage and insures clean, dry air, as impurities and the condensation from steam-cylinders cannot leak into the air-chambers. The action of the pump in compressing air is similar to that of using steam in a compound engine, and results in a corresponding economy; both steam-cylinders and the high-pressure air-cylinder are 5″ in diameter. The low-pressure air-cylinder is 7″, and is twice the capacity of the steam-cylinder that actuates it. In

* Manufacturer's claim.

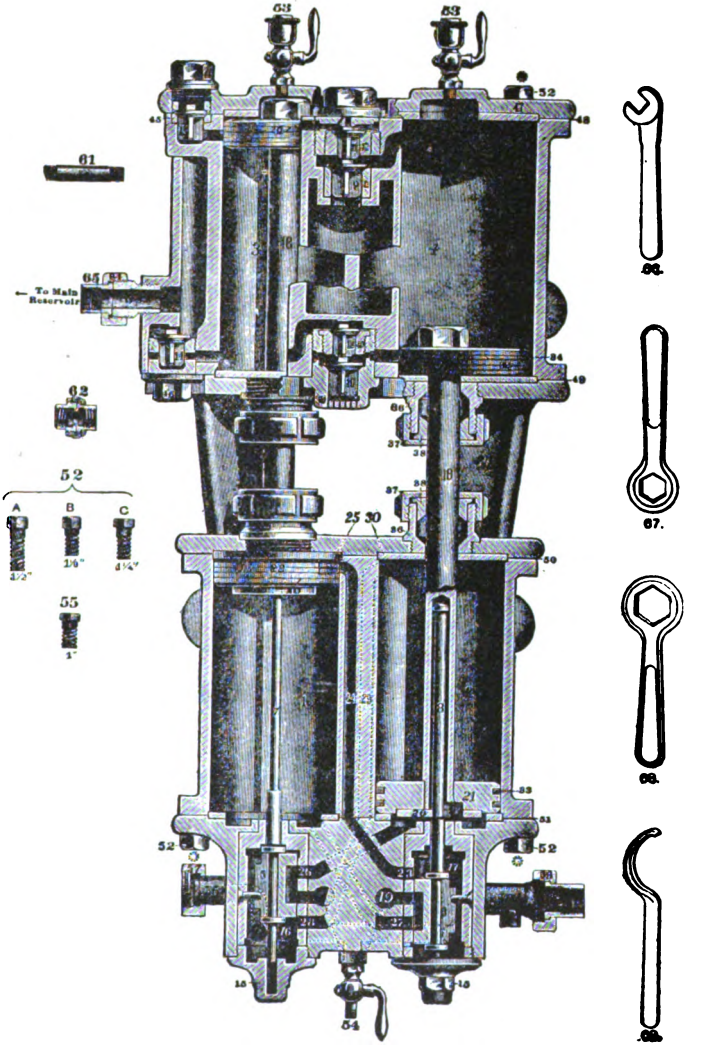

FIG. 252.

operation both air-cylinders are filled with free air. The high-pressure piston remains quiet until the air from the large cylinder is compressed into a small cylinder, then the high-pressure piston completes the compression and forces the air into the reservoir. Thus two measures of steam compress three measures of air. The valve-gear for the steam-cylinder consists of two plain slide-valves 5 and 6, moving in steam-chests 16 and 17, and operated by small tappet-rods 7 and 8, which extend into the hollow piston-rods of the steam-cylinders. As is shown, the valve on one side controls the supply of steam on the opposite side.

The following description will make clear the action of the pump:

In the position shown, the air-piston in cylinder 4 has completed its downward stroke, and compressed its contents through valve 12 into cylinder 3. The plate 20 on steam-piston 21 has moved valve 6 to its lowest position. This admits steam through ports 23, 24, 25 to upper side of piston 22, and will cause that piston to descend and expel the partially compressed air in cylinder 3 through valve 14 and passage shown into the reservoir. Meanwhile the cylinder 4 has become filled above the piston with air at atmospheric pressure through valve 9, and the cylinder 3 will be filled with air at atmospheric pressure through valves 9 and 11, both of which open inward and are seated by gravity. When piston 22 reaches the end of its downward stroke the plate 20 strikes the tappet on valve-stem 7 and moves valve 5 to its lowest position, thus uncovering port 26 and admitting steam through port 26 to the lower side of piston 21, thus causing

piston 21 to rise and compress the air which is in cylinder 4, through valve 11 into upper part of cylinder 3. Just as piston 21 completes its stroke, its plate 20 strikes the tappet on valve-stem 8 and moves valve 6 to its highest position, uncovering port 27 and admitting steam through port 27 to the lower side of piston 22, causing that piston to rise and expel the partially compressed air in cylinder 3, through valve 13 into passage shown, and thence into the reservoir.

While the pistons are compressing the air above them into the reservoir, the air-cylinders below the pistons will be filled with air at atmospheric pressure through valves 10 and 12 ready for another cycle of operation. The duplex construction makes it possible for the valve-gear to be extremely simple. The air-valves are simple poppet-valves, which seat by gravity while the pistons wait, and therefore are not liable to pound themselves to pieces. All parts of the pump are durable and easily accessible. Steam and air valves may be examined by unscrewing plugs without taking down the pump.

PUMP-GOVERNOR.

Fig. 253 shows the construction of the pump-governor. Its purpose is to automatically shut off the supply of steam to the pump when the air-pressure in the train-pipe and auxiliary reservoirs has reached the desired limit. The brake-gear used on cars and engines is designed for a maximum air-pressure of 70 pounds in train-pipe. This limit should not be exceeded.

Referring to the illustration. the steam-valve 5 is

opened by steam-pressure, but is closed by air-pressure on top of piston 4 when the train-pipe pressure has

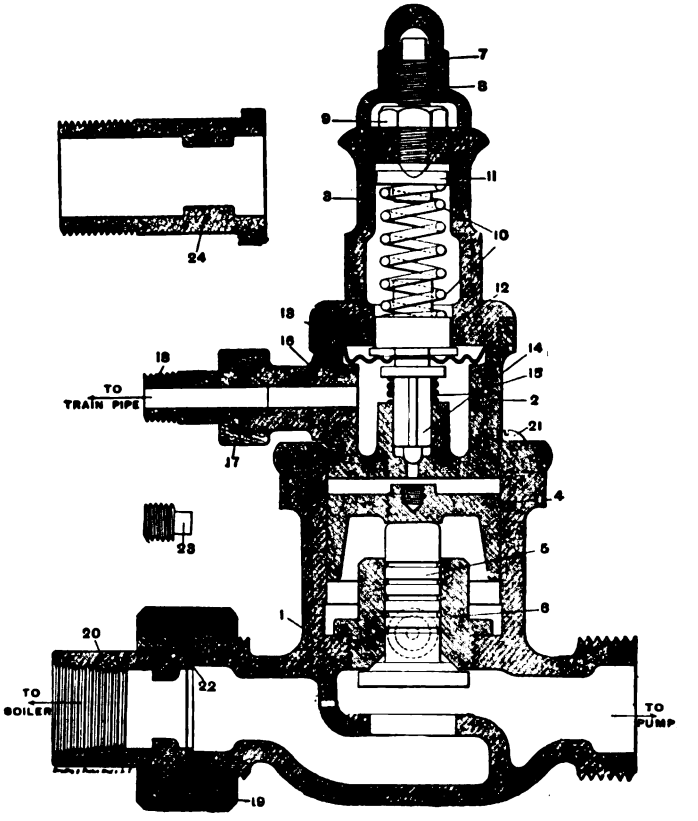

FIG. 253.

reached the limit for which the governor is adjusted. The action of the train-pipe pressure is controlled by

diaphragm 13 and spring 10. When the train-pipe pressure underneath the diaphragm overcomes the tension of spring 10, the diaphragm will rise and allow valve 14 to open the train-pipe pressure to the top of piston 4. When the train-pipe pressure becomes less than the desired limit the spring 10 will close the valve 14. The air above piston 4 will then leak by the piston and allow the steam-pressure to open the steam-valve 5. An opening is provided in the chamber under piston 4, for any leakage of steam or air. Any necessary adjustment of the regulating spring 10 may be made by means of screw 8 and lock-nut 9. In order that steam may keep the exhaust from freezing, a small hole above the steam-valve is always open.

Instructions.—Place the pump-governor in the steam-supply pipe leading to the pump, so that steam will flow through it in the direction indicated by the arrow. The end of the governor which goes toward the pump is made to fit the union connection furnished with the pump, and as a rule it is best to attach the governor here. Do not use rubber gaskets in making connections. Connect the quarter-inch union in the upper part of the governor with the train-pipe. After piping up, but before connecting in the governor, blow out both steam and air-pipes, to expel any dirt or scale which may be in the pipes. Two leakage or drip holes, tapped to take $\frac{1}{8}$-inch pipe, are provided in the body of the governor. One of these holes must always be left open, but the other one may be plugged.

ENGINEER'S VALVE.

Fig. 254 shows the Engineer's Valve. The different positions of handle are "release," "running position," "lap," "service," and "emergency," corresponding to the effect produced with the handle standing in those positions.

The following description will make its operation plain: The chamber above piston 32 is connected with the train-pipe; the chamber below the piston is connected with the main reservoir. Exhaust-valve 42 regulates the discharge of air from the train-pipe. It is opened by handle 50, but closed automatically by piston 32. Lever 67, which is fulcrumed on eccentric-pin 44, is for opening valve 42. Lever 65, which is fulcrumed on pin 47, and connected to eccentric-pin 44 by link 66, is for opening main feed-valve 64 and small feed-valve 70. To apply the brakes, the handle (which is attached to the spindle that carries the eccentric-pin 44) is moved beyond the second notch (lap). This raises the outside end of the lever 67, and with it valve 42, thus allowing air to escape from the train-pipe, as the pressure tends to raise the inside end of lever 67 and allow valve 42 to close and stop the escape of air from the train-pipe. If the eccentric-pin is raised but a little, the piston will have to rise but little to close the valve. If it is raised higher, the piston will need to rise higher to close the valve, and consequently will allow more air to escape from the train-pipe before the valve closes. This piston is made automatic in its action by means of the bell-crank 34 and spring 33.

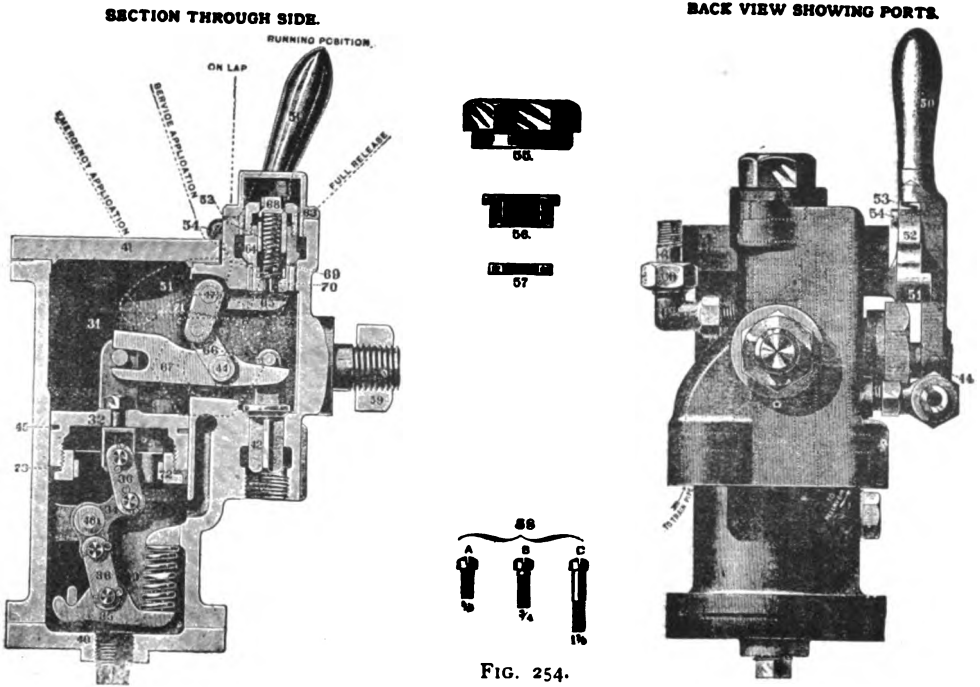
SECTION THROUGH SIDE.
RUNNING POSITION.
ON LAP
SERVICE APPLICATION
EMERGENCY APPLICATION
FULL RELEASE
BACK VIEW SHOWING PORTS.
55
56
57
58
A
B
C
¾
1⅛

FIG. 254.

The pressure of the spring holds the piston down as long as the pressure on both sides of the piston is the same, but with a very short leverage on the bell-crank. The piston is connected to the bell-crank with a much longer leverage so that a very slight difference in pressure on the piston will allow it to start upward, but as it ascends the piston leverage decreases and the spring leverage increases until an equilibrium occurs and the piston stops. A further reduction on the upper side of the piston will cause the piston to travel still farther upward. It follows that the reduction of pressure in the train-pipe caused by opening the valve 42 will depend on the height the eccentric-pin 44 is raised by the handle, as the piston must rise a corresponding distance to close the valve, and the distance of piston travel depends on the difference in pressure on its opposite sides.

To release the brakes the handle is moved forward the full length of its stroke. This causes eccentric-pin 44 to descend, allowing the outer end of lever 67 to clear the lifting-pin in valve 42, so that it will be held to its seat by the train-pipe pressure above it. As lever 65 is connected with eccentric-pin 44 by link 66, this movement also causes it to rotate and lift main feed-valve 64, admitting full reservoir-pressure to the train-pipe; the chamber above feed-valve 64 being in direct communication with the main reservoir. When the handle is brought to running position or first notch from full release, main feed-valve 64 is closed, while small feed-valve 70 remains open, and air from main reservoir can get to train-pipe only by passing through excess-pressure valve 68, by compressing spring 69, and thence

through small feed-valve 70 to train-pipe. In the running position the pressure in train-pipe is kept from 20 to 25 lbs. lower than main-reservoir pressure.

When handle is brought to lap position or second notch from full release, main feed-valve 64 is closed, together with small feed-valve 70, and in this position no air can get from main reservoir to train-pipe; or, in other words, the train-pipe is blanked from main reservoir.

PLAIN TRIPLE-VALVE.

Fig. 255 shows a section of plain triple-valve which is used only on engines and tenders. The parts are few, simple, and durable, and their operation is not easily affected by dirt. Connections are made with the auxiliary reservoir, the brake-cylinder, and the train-pipe, as shown. Slide-valve 38 controls the exhaust of air from brake-cylinder to release brakes, and graduating-valve 48 controls the admission of air from auxiliary reservoir to the brake-cylinder for applying brakes. Piston 40 actuates slide-valve 38 and graduating-valve 48, and in such a manner that valve 38 will close exhaust-port before graduating-valve 48 is opened. The slide-valve 38 can remain stationary while the piston 40 returns part way and closes graduating-valve 48, as the abutments that move valve 38 are farther apart than the length of the valve.

The operation is as follows: Air from the train-pipe passes to cylinder *A*, and thence through passage *B* and *C* to chamber *D*, and then through passage *E* to the auxiliary reservoir. When the train-pipe pressure is

reduced the piston 40 moves its full stroke, first shutting off the auxiliary reservoir from the train-pipe by

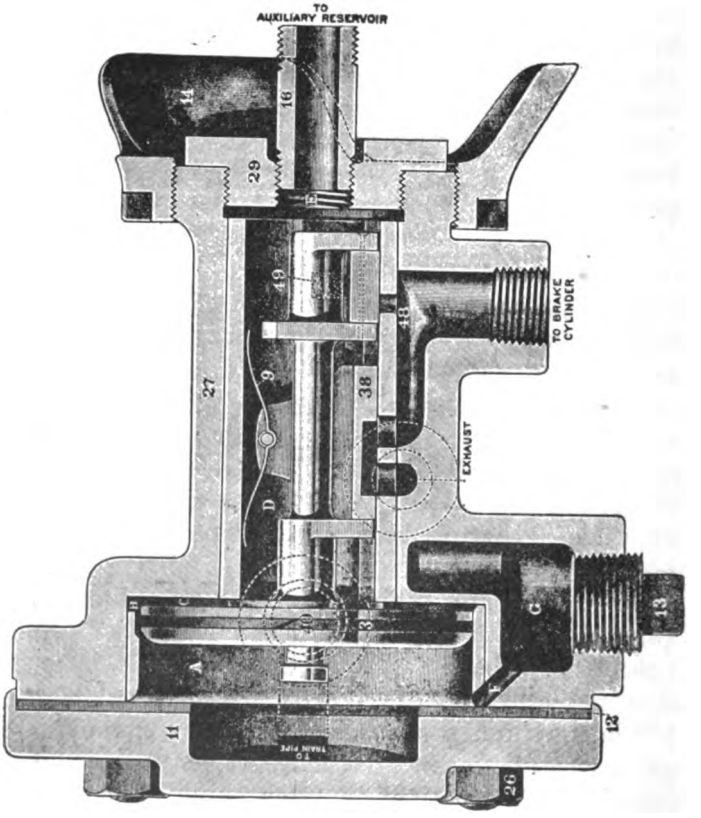

FIG. 255.

closing the connection between passage *B* and cylinder *A*, next closing exhaust-valve 38 and opening graduat-

ing valve, 48 which will admit air into the brake-cylinder, the amount admitted being in proportion to the reduction of the train-pipe pressure. If the train-pipe pressure is reduced but little, the pressure in the reservoir is soon reduced to less than that in the train-pipe, and the piston 40 starts back and closes graduating-valve 48 without disturbing slide-valve 38, which is held with some force by the air-pressure, aided by spring 9, and checks the return-stroke when valve 48 is closed. A further reduction of train-pipe pressure would repeat the same action and apply the brakes a little harder. If the train-pipe pressure is reduced 5 to 8 lbs. the brakes will be applied with but moderate force, but if the train-pipe pressure is reduced 20 lbs. the graduating-valve 48 will remain open and the brakes go full on, as the auxiliary-reservoir pressure will then continue to flow into the brake-cylinder until the pressure in each is equalized. An increase of pressure in the train-pipe will cause all the valves to move back to the position shown in the plate, thus releasing the brakes and allowing the reservoir to be recharged.

Passage *F* allows moisture from the train-pipe to collect into chamber *G*, where it can be readily drained by unscrewing plug 13.

Fig. 256 shows a section of the quick-action triple valve, the upper part of which is a duplicate of the plain triple-valve. For ordinary service stops the quick-action parts shown in the lower half of the cut remain inoperative, and the upper part operates in precisely the same way as the plain triple-valve, admitting auxiliary-reservoir pressure only to the brake-cylinder. The quick-action parts are for the purpose of giving a more

powerful action of the brake than is necessary in ordinary service, and in emergencies, where such powerful

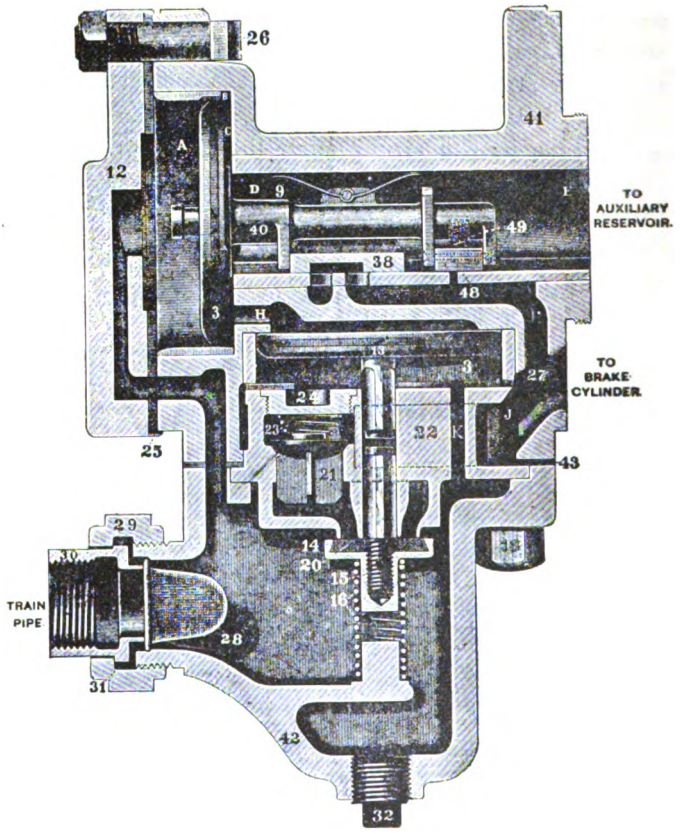

FIG. 256.

action is needed, they admit additional pressure direct from the train-pipe through a comparatively large

opening to the brake-cylinder, thus reinforcing the pressure derived from the auxiliary reservoir. The parts are few, simple, and durable, and have been improved so that the operation of the graduating and emergency features is unfailing on trains of any length and under any conditions of service. They have been thoroughly tested in the shops and in actual use on 50-car freight trains, demonstrating their reliability under most unfavorable conditions.

The emergency or quick-action portion consists of three moving parts; 1st, a valve 20,* controlling a passage from the train-pipe to the brake-cylinder; 2d, a piston 13 for actuating valve 20; 3d, a check-valve 21 to prevent air in brake-cylinder from passing back into the train-pipe. Valve 20 is held on its seat partly by spring 16, but principally by train-pipe pressure on its under side. Piston 13 is open to reservoir pressure on its upper side, through passage *H*, and to train-pipe pressure on its lower side through passage *K*. In order to open valve 20 it is necessary to decrease the train-pipe pressure so much that the sum of the upward pressures on valve 20 and on piston 13 is less than the amount of reservoir pressure on the top of piston 13. A quick reduction of 10 lbs. or more in the train-pipe pressure causes piston 13 to move down and force valve 20 from its seat, allowing the train-pipe pressure to lift and pass under check-valve 21, and through passage *J* directly into the brake-cylinder, thus quickly reducing the train-pipe pressure to actuate valves on succeeding cars, at the same time applying the brakes

* To get the proper names of the different parts of the brake mechanism, look to the numbers given in the text and drawings.

with greater force than would be possible if the brake-cylinder received air from the reservoir only. Check-valve 21 will close as soon as the brake-cylinder pressure is as high as that in the train-pipe, and the brake-cylinder pressure will be increased from the auxiliary reservoir through valve 48.

To release the brake the train-pipe pressure is restored. This raises piston 13 and allows the spring to seat valve 20 before piston 40 has sufficient force to overcome the resistance of slide-valve 38 and cause it to return to the position shown and thus release the brake.

Moisture from the train-pipe collects in the bottom of the valve, where it can be easily drained by unscrewing the plug.

WORK REPORTS.

Locomotive engineers and firemen should try to become familiar with each part of the locomotive mechanism, as the parts are constantly increasing, due to improvements; and the question is often asked, What shall I call this or that part which is broken, when a work report is to be made out. It is much better for those in charge of the repairs to know from the report of the engineer just what part is broken, instead of having to guess, or get the inspector to look for it; and in a measure the work report will show the engineer's knowledge of the machine he controls. The work reports given on the next page are not fictitious but those respectively of an engineer who is progressive and of one who is not so inclined.

I.

SY. DIV., Jan. 15, 1893. 10.20 A.M.

(Engine Track.)
Buddly sock lost off the Jumbo.
Have flues corked.
Piston-packing wants to be fixed.
Air-pipe is busted somewhere under foot-board; have the inspector look for it.

Safety valve { lifts at 165 lbs. / seats " " "

JOHN AMOS, Engineman.

II.

SY. DIV., Jan. 15, 1893. 10.20 A.M.

(Engine Track.)
Cinder hopper-cap lost.
Have flues caulked; leaking in bottom row. (Fire-box end.)
Piston-rod packing-rings broken on right side.
Air-pipe leading from main brake-pipe to auxiliary reservoir on the engine burst near the triple-valve.

Safety-valve { lifts at 165 lbs. / seats " 160 "

THOS. ALLEN, Engineman.

Report I is made out by a man who doesn't care to read any books about his business or keep posted on improvements. All that he desires is that pay-day shall come once a month.

Report II is made out by a progressive man, who believes that he can advance himself by reading and keeping abreast of the improvements in his business.

CHAPTER XVIII.

LOCOMOTIVE PACKINGS.

THE first metallic packing for locomotives simply furnished metal rings in place of the fibrous ones formerly used. It failed to provide all the essentials that have since been found necessary to success.

Fibrous packing had at best more or less elasticity. It was possible to compress it between its gland and the bottom of the stuffing-box enough to make it contract on its rod and make a joint.

If its rod moved out of the centre of the stuffing-box when at work, it pushed the packing aside, and when it moved back its packing followed it or leaked.

Some means must be provided to make the soft metal rings fit the rod and be free to move with it.

They must fit tighter on the rod when the steam is on than when it is off.

The first improvement was in adopting a cone-cup on the gland end of the packing and fitting the soft metal rings into it. These rings were kept into the cone by a spring.

This kept the rings in contact with the rod and the steam itself increased the pressure when the piston was doing work—but it leaked.

When the rod left the centre of the stuffing-box the packing could not follow it, and it was pulled off its seat, crushed and distorted. Then the flat-faced adjusting ring was invented.

The cone-cup had a ground joint on a flat ring that rested on a ground joint on the gland and was bored out a little larger than the diameter of rod. If the rod was moved up or down the packing could go with it; but this packing still leaked, because it did not provide for the "cramping" of the rod—for its being more out of centre at one end than at the other.

This trouble was entirely overcome by the invention of the ball-and-socket joint.

The sliding ring was left with a flat joint against the cone, but with a ball joint on the gland. Then wherever the rod went, straight or crooked, the packing followed it with ease, always maintaining a joint between the soft metal rings and the rod, between the vibrating cup and the adjusting ring by means of the flat joint and between the gland and adjusting ring by the ball joint. This double-bearing ring we call the ball joint, for short.

The next step was to abandon the old internal fitting gland and make a gland that was fitted steam-tight against the cylinder head, its only office being to keep the backing in the stuffing-box.

It took years of experience to find these things out —to demonstrate the proper angle to make these cones, for instance.

In the early days it was not uncommon for an engineer to find his babbitt rings coming out around the

piston-rod in a sheet, actually hammered through the narrow opening of the vibrating cup. This was because the angle was too acute for the pressure and too much space between cup and rod.

If the angle was made more obtuse the lower ring would not be forced through the vibrating cup, but

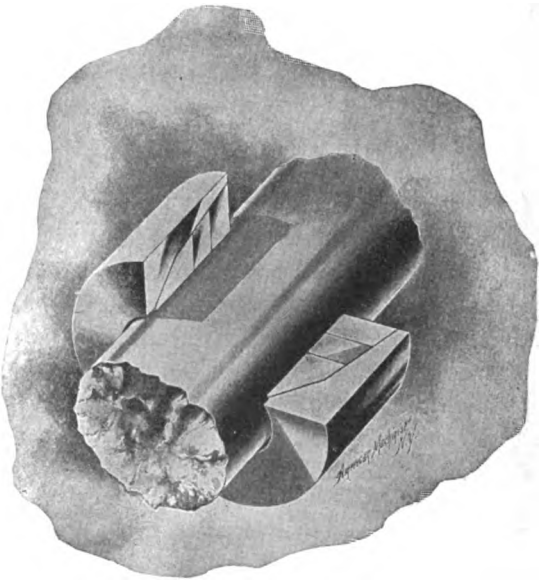

FIG. 257.—DOUBLE-ANGLE VIBRATING CUP.

there was trouble with the other rings. The centre ring would not close up on the rod, and would stick the upper ring.

The United States Metallic Packing Company brought out the double-angle vibrating cup, as shown in Fig. 257.

The lower ring will stand the pressure behind it, and the two other rings have sharp enough angle to go up to the rod and do their work. This angle must be in proportion to the steam pressure, within reasonable bounds, and what is just right for one pressure may not give good results at another pressure.

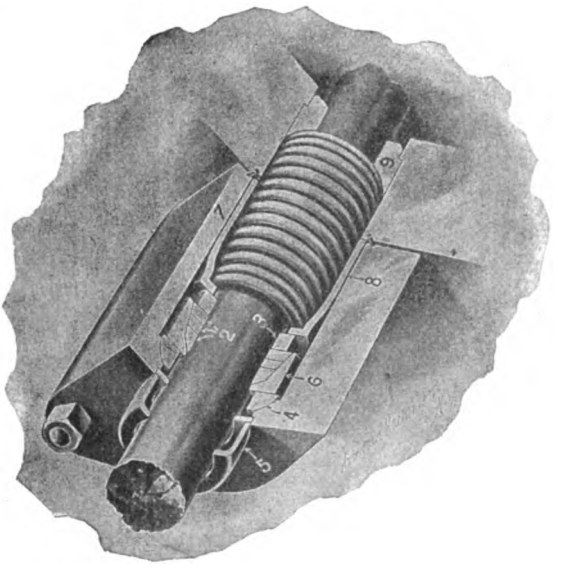

FIG. 258.—VALVE-STEM PACKING.

Parts referred to by numbers are as follows: 2. Three Babbitt Rings in halves, known as one ring; 3. Follower; 4. Ball Joint; 5. Swab Cup; 6. Vibrating Cup; 7. Gland; 8. Preventer; 9. Support.

Before the invention of the ball joint it was utterly impossible to pack locomotive valve-stems with metallic packing—they "wobbled" too much.

There are lots of locomotives running this very day with metallic packing on their piston-rods but not on their valve-stems.

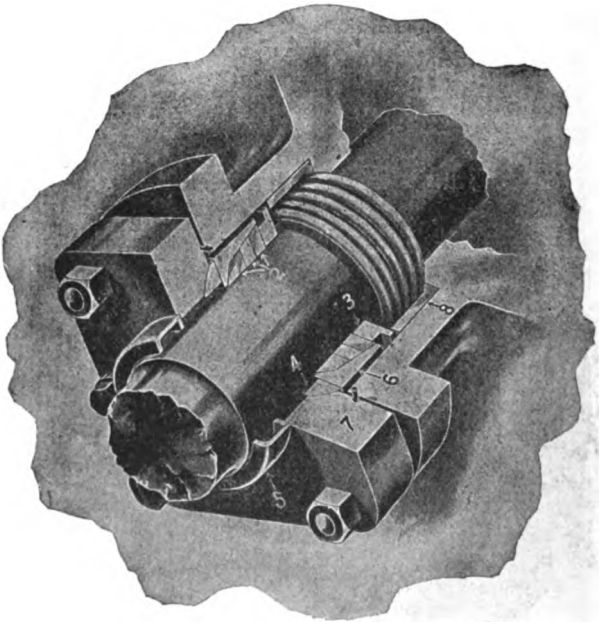

FIG. 259.—PISTON-ROD PACKING.

Parts referred to by numbers are as follows: 2. Three Babbitt Rings, known as one ring; 3. Flange Follower; 4. Ball Joint; 5. Swab Cup; 6. Vibrating Cup; 7. Gland; 8. Preventer.

It took a long time to determine the fact that the trouble was not in that "wobble" that had worried folks.

It was in the varying travel of the stem.

At the cut-off most used the valve-rod travelled a

short distance and wore a "notch" in its under side where it rested on the neck-ring.

Then when the engine was full-stroked this "notch"

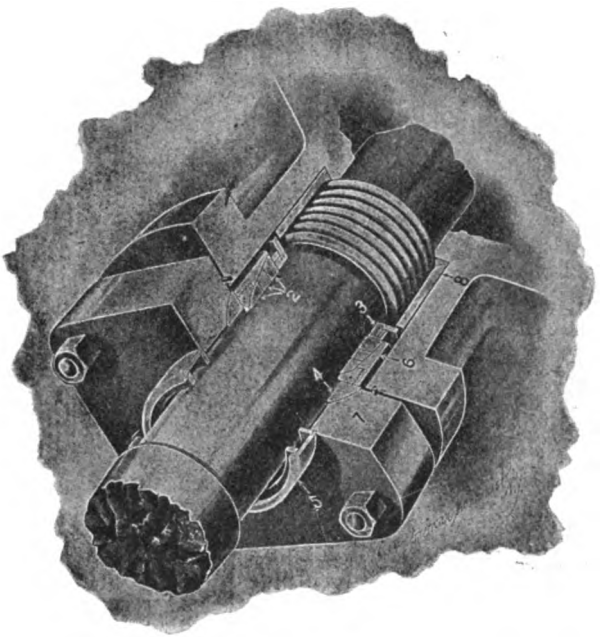

FIG. 260.—PISTON-ROD PACKING FOR RODS WITH SHOULDER.

Parts referred to by numbers are as follows: 2. Three Babbitt Rings in halves, known as one ring; 3. Flange Follower; 4. Ball Joint; 5. Swab Cup; 6. Vibrating Cup; 7. Gland; 8. Preventer.

was pulled through the packing rings and became a broach, crushing and cutting them out of shape, and leak!—John Alexander expressed it when he said it was a good thing there was a yoke on the valve itself or *it* would have leaked out. This trouble was overcome

by simply carrying the valve-stem packing out on the rod to a point where that "notch" couldn't touch it. This was done by an extension gland and an extension flange follower, which is named the "Preventer." This packing is shown in Fig. 258.

Figs. 259 and 260 have the parts named as they should be.

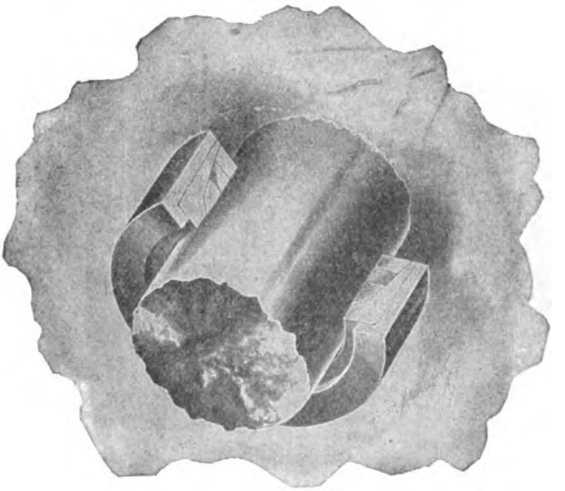

FIG. 261.—GIBBS VIBRATING CUP.

Fig. 260 shows a style of packing so made that it can be put on a rod having a shoulder or enlarged end of rod.

This is done by making the smaller part of its vibrating cup in halves and securing it in the other part of cup after the packing is on the rod.

Fig. 261 shows the Gibbs Vibrating Cup, designed

for engines having an enlarged end on rod. This is recommended as an improvement over the regular vibrating cup for this purpose, especially where packing

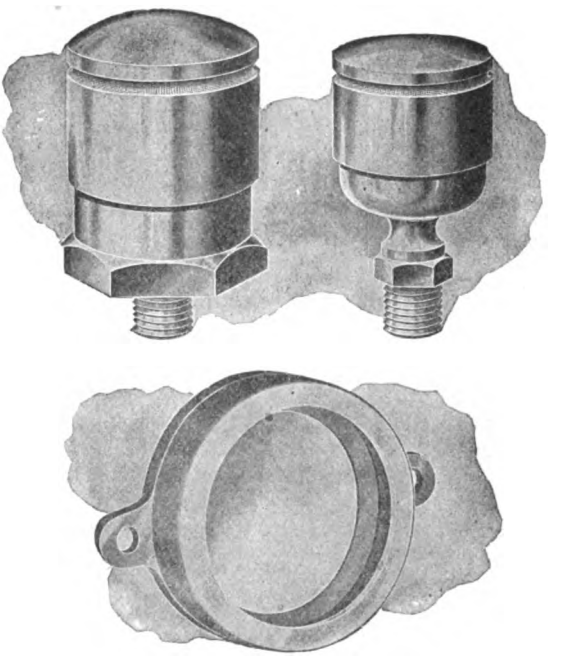

FIG. 262.—OILING DEVICES.

is maintained by the progressive system. This cup has an inner ring, in halves. In designing new work, using this cup, it is desirable to increase the diameter of stuffing-box one-half of an inch.

In all United States packings the soft metal rings are

in halves; not necessary to disconnect anything to put them in.

When packings are applied to old engines the rods and valve-stems should be turned as true as possible—ground is better.

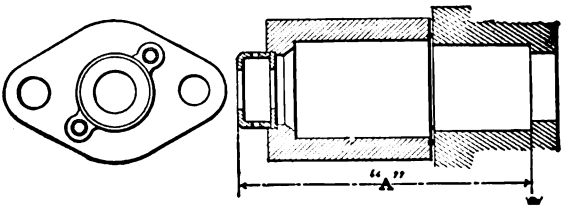

Length desired from bottom of stuffing-box to extreme end of packing. This length is based on 4½" of valve-travel. If valve-travel is longer, lengthen "A" by the amount of increase of travel, and if shorter, reduce "A" by this amount.

Diam. of Stem.	1 in.	1⅛ in.	1¼ in.	1⅜ in.	1½ in.	1⅝ in.	1¾ in.	1⅞ in.	2 in.
"A"	7⅞	7⅞	7⅞	7⅞	8	8	8⅛	8⅛	8⅛

FIG. 263.—PROPORTIONS FOR VALVE-STEMS.

In renewing rings on rods that are much worn down below original size, or have been turned down, it is always advisable to supply new vibrating cups to conform nearly to size of rod. Never hope that rings larger or smaller than the rod will "wear down"—they won't.

Oiling devices are shown in Fig. 262. Care should be taken to keep these clean and in good shape. When the swab collects a lot of dirt and cinders, either wash it out thoroughly or renew it.

Remember that metallic packing is a bearing—a

babbitted bearing—and needs oil and attention just as much as it would if the shaft turned around.

One hundred thousand miles is often made, and seventy-five thousand is common, without renewing rings.

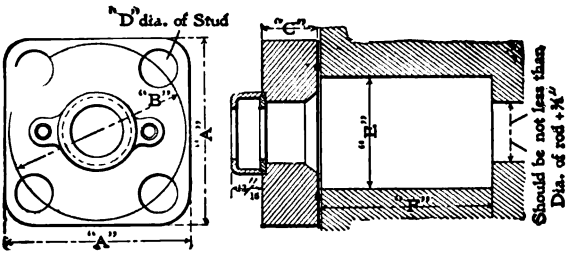

DIMENSIONS DESIRED FOR U. S. METALLIC PACKING.

Diam. of Rod.	"A."	"B."	"C."	"D."	"E."	"F."
Inches.	Inches.	Inches.	Inches.	Inches.	Inches.	Inches.
1½	5½	5	1¼	⅞	3¼	4⅜
1¾	5½	5⅜	1¼	⅞	3½	4⅜
2	5¾	5⅜	1¼	⅞	3¾	4⅜
2¼	6	5⅞	1⅓	⅞	4	4⅜
2½	6¼	6⅛	1⅓	⅞	4¼	5⅛
2¾	6½	6⅜	1½	⅞	4½	5⅛
3	6¾	6⅜	1½	⅞	4¾	5⅛
3¼	7	7	1¾	⅞	5⅛	5⅛
3½	7¼	7⅜	1¾	⅞	5½	5⅜
3¾	7½	7¾	1⅝	⅞	5⅞	5⅜
4	7¾	8	1⅝	⅞	6⅛	5⅜
4¼	8	8½	2	⅞	6½	5¾
4½	8¼	8¾	2	⅞	6¾	5¾

FIG. 264.—PROPORTIONS FOR PISTON-ROD STUFFING-BOXES.

The principal repairs consist of renewing the babbitt rings. The following formula of the compositions is: 100 lbs. tin, 9 lbs. copper and 6 lbs. antimony, known as No. 1 Mixture, for old style or single-angle metals.

It also gives good results in the multiangular type of ring for high pressures, No. 4, composed of 83⅛ per cent. lead, 8⅛ per cent. tin and 8⅛ per cent. antimony, which gives excellent results and is also very much cheaper than the No. 1 metal.

AIR-PUMP PACKING.

Fig. 265 shows a metallic packing for air-pumps, and made so as to fit into the regular gland. This

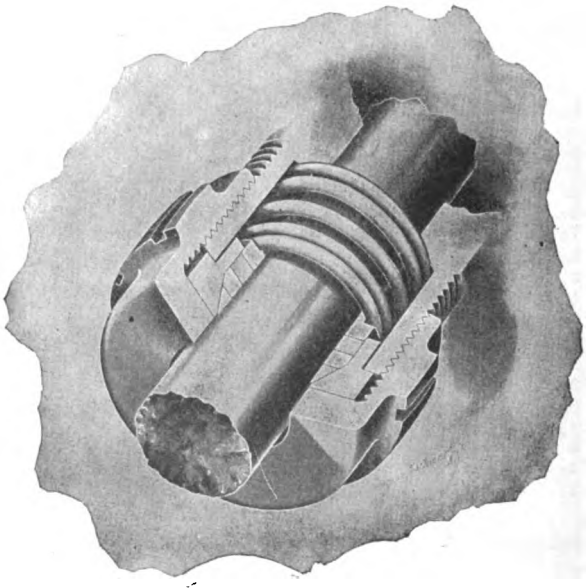

FIG. 265.—AIR-PUMP PACKING.

packing takes the place of the usual fibrous packing, and keeps the piston-rod very smooth and prevents

scoring. The fibrous packing has a tendency to burn when the piston-rod becomes warm, and the leak will continue to get worse if the pump is not cooled off. The charred packing, if tightened down by the nut, will have a tendency to cut the rod and create heat. The metallic packing will wear well and give a long life under proper care. The construct is similar to the piston-rod packing except the ball-joint between cups and gland-nut is omitted, the movement of rod being free from lateral motion. It is a very annoying thing to have a fibrous packing to burn out and blow; it has the effect of reducing the efficiency of the pump fifty per cent., and where much braking is to be done, it is a serious matter. In order to maintain a pressure the speed of the pump must be doubled, which will cause heating, which will further decrease the amount of air compressed.

CHAPTER XIX.

TRACK-SANDING APPARATUS.

VARIOUS means for sanding the rails under a locomotive have been used. The great trouble has been the clogging up of the sand-pipes, due to moisture entering the lower end of sand-pipe. Sand being kiln-dried will absorb water rapidly. The usual means employed to sand the rails in the past has been the old sand-lever and valves over each sand-pipe opening in the sand-box, the sand being broken or loosened by pins on the valve-lever. The sanding apparatus has become an important feature on the present locomotive, and its principle and mechanism call for more study on the part of the men operating locomotives. In the apparatus to be described the sand is caused to flow by compressed air, and insures the sand to be delivered at the proper time, also a saving in sand. An excessive amount of sand is a cause of rapid tire wear. A very important feature is the automatic sanding of the rail without the special attention of the engineer. In the use of the old sand-lever the engineer had to act very quickly when in close quarters to pull open the lever and sand the track, and at times the sand would not run. By the present method the application of the brakes will sand the track if so desired, or only on emergency application. The various forms shown are for the purpose of covering the field as much as possible, as either form may be found on different railroads.

LEACH "D" SANDER.

Fig. 266 shows a Leach "D" sander. This sander has a single opening to the sand-box, with a double branch connected to the trap into which the sand runs from sand-box. Into one side of trap is attached sand-pipe to rail; opposite the sand-pipe opening is the adjustable air-nozzle *D*, which is threaded and screwed into the air-pipe. This nozzle can be screwed in or out, thus increasing the flow of sand, due to the amount of opening between the sand discharge-pipe and the nozzle *D*. This nozzle is held in position by jamb-nut *C*. A small check-valve *B* prevents the air-passage from becoming clogged with sand. To regulate the amount of air flowing to the nozzle, a port *G* is closed by the thumb-screw *F*. The air-pipe is connected to the main reservoir-pipe in cab by a small valve to control the air-flow. The discharge-pipes in this case are bent up 15 degrees to prevent sand from jarring out the trap. At the bottom of trap is an inch plug *E*, which can be removed to take out small stones and dirt that may accumulate in trap.

When desired to sand the track the valve in cab is opened and this causes air to issue from nozzle *D*. The trap being full of sand, the air issuing from nozzle *D* blows the sand out of the discharge-pipe to rail. With a double sander, sand can be applied to the rail running in either direction. In this style the trap contains two nozzles and two discharge-pipes, one in each direction, with two air-pipes and valves in cab. Either valve can be opened.

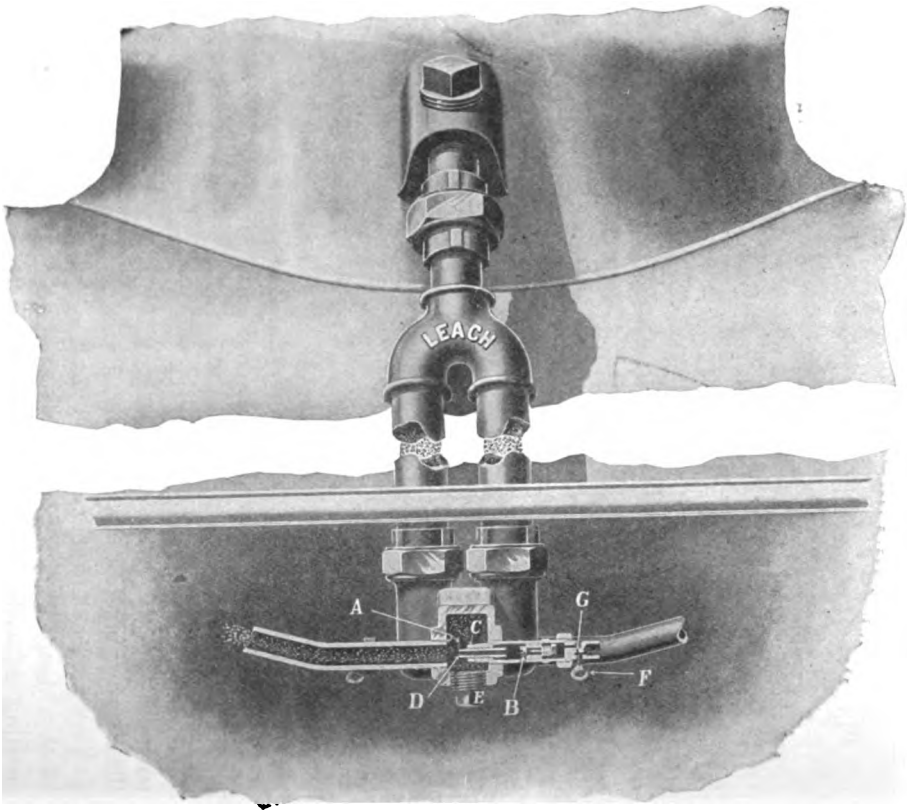

FIG. 266.—LEACH "D" SANDER.
Showing adjustable air-nozzle with check-valve.

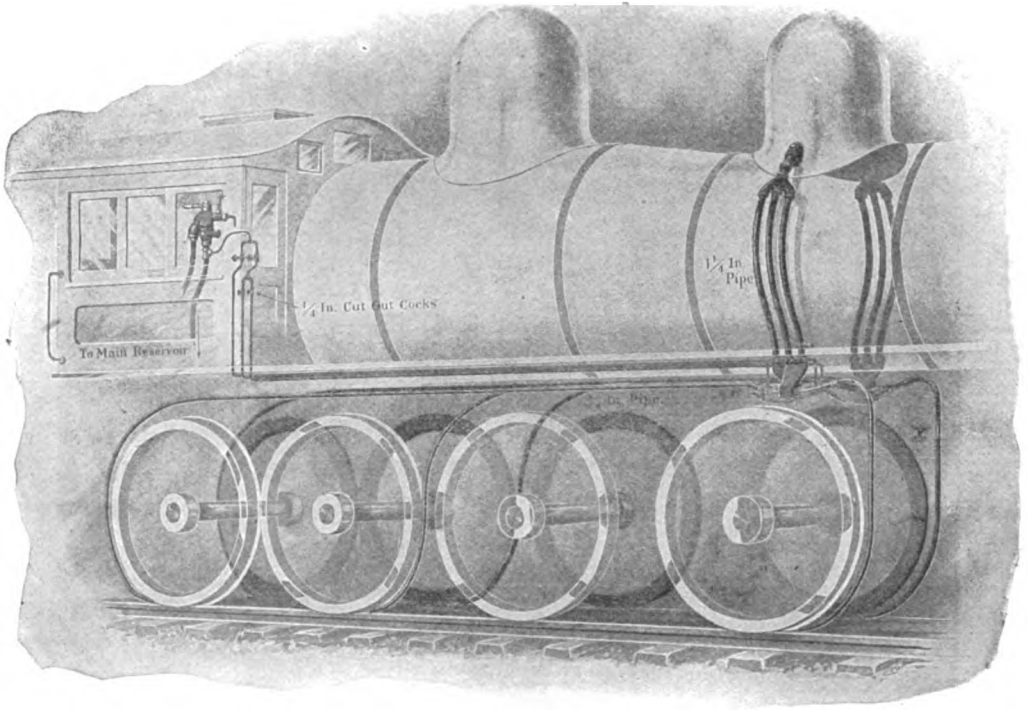

FIG. 267.—LEACH "D" TRIPLE SANDER.

For sanding under two pairs of drivers when going ahead, and also one pair of drivers when backing up. Especially adapted for heavy locomotives in extremely hard service.

Fig. 267 shows a triple sander for use on heavy locomotives. This sander has three branch pipes from sand-box to trap, and three nozzles and discharge-pipes, with three air-pipes with three valves leading to cab; these three air-pipes are connected to the main reservoir by only one pipe, as shown. With this construction two pair of drivers can be sanded going ahead, and one pair when running backwards. It is to be understood that the construction of single, double, and triple sander is the same, except in the number of parts and form of trap. Fig. 268 gives detail cuts of the different parts, also the cab-valve with warning-port in valve-stem. This valve-stem is bored out, having a conical valve-spring loaded in the top; also a small port leading from the side above valve-seat. This valve will open if too much pressure is used, also if air-pipe or nozzle should become clogged up, warning the engineer to that effect.

Fig. 269 shows a Leach "A" sander in combination with the gravity system or hand-lever, Fig. 270 detail of same. The trap is divided in two compartments, with an opening between the two over partition; two pipes are between trap and sand-box, one pipe to left side of trap and the other to right side. The discharge-pipe to track is attached to left side of trap, as shown in Fig. 269. To the right side of trap is attached the air-pipe; a nozzle is screwed into the port at a proper angle. Above this air-nozzle a hardened-steel cap is screwed to trap; the purpose of this is to withstand the wear of sand. Suitable plugs are in trap to allow for cleaning out trap. When desired to use sand without using the pneumatic sander, the hand-lever

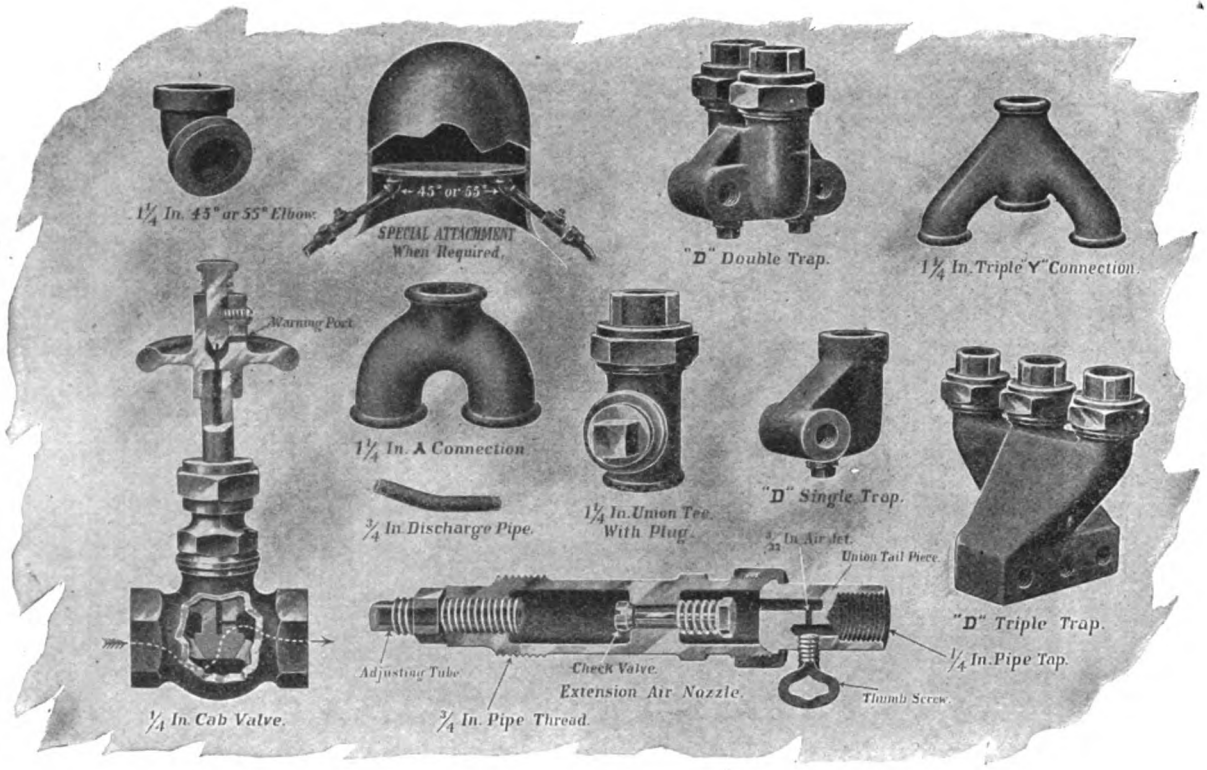

FIG. 268.—DETAIL PARTS LEACH "D" SANDERS.

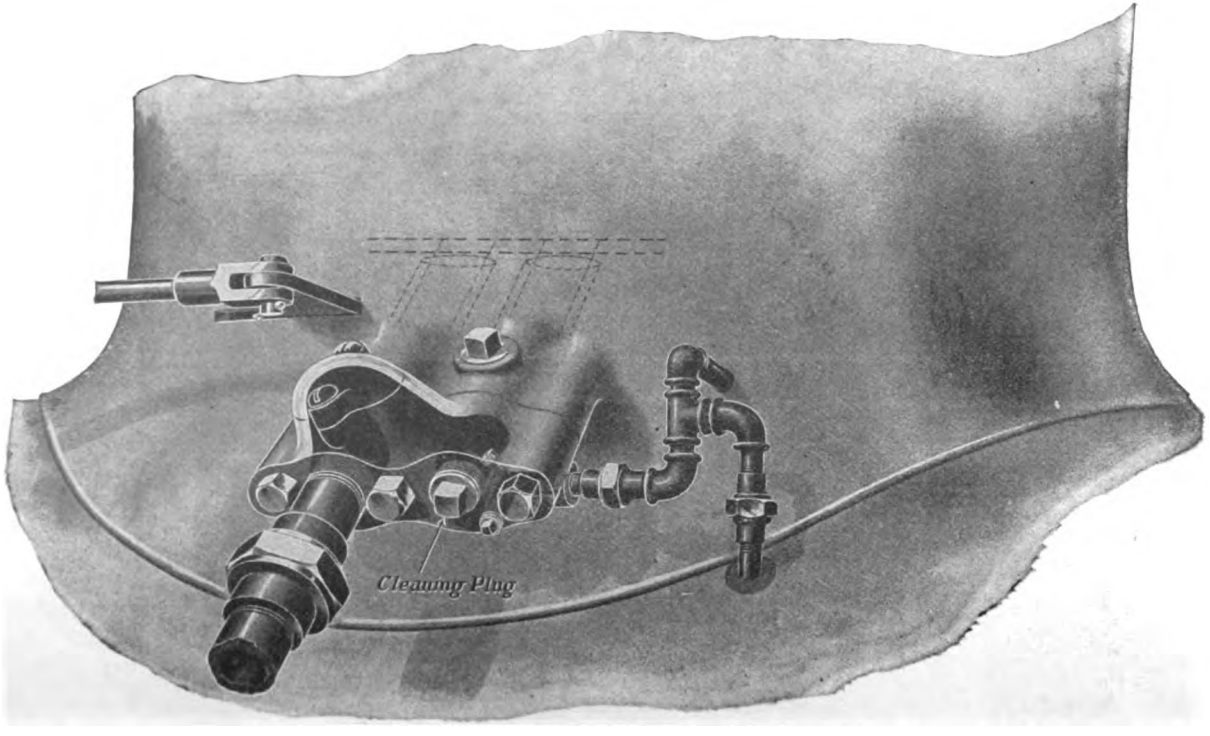

FIG. 269.—LEACH "A" SANDER

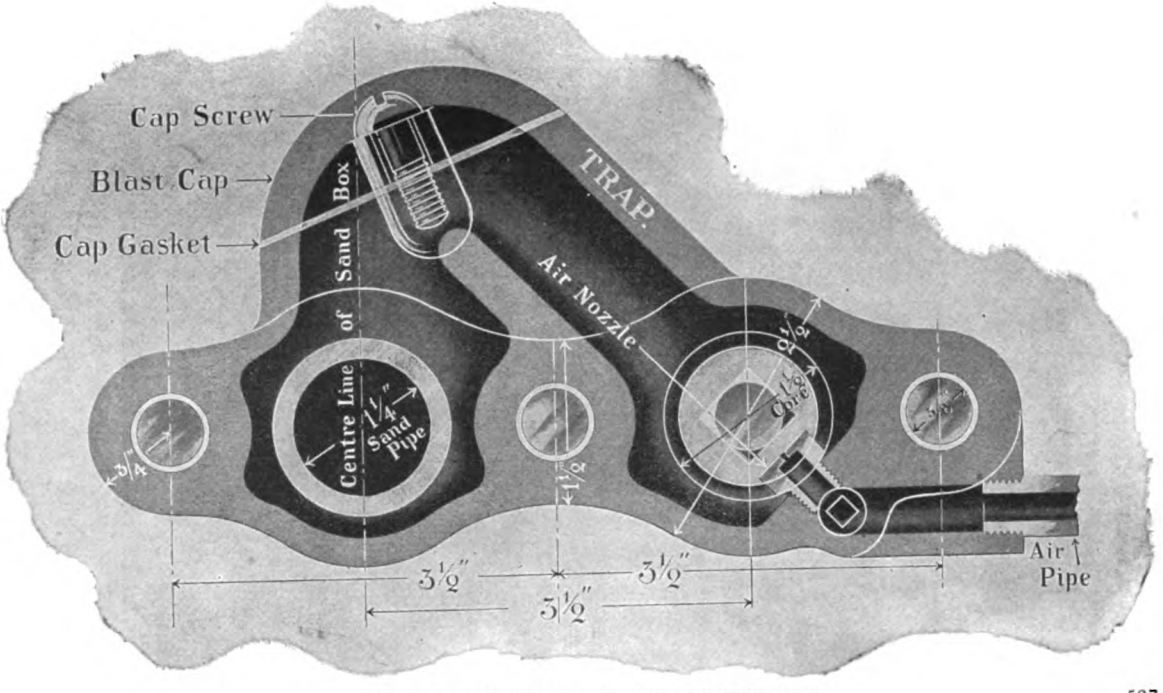

FIG. 27c.—DETAIL OF LEACH "A" SANDER.

can be used; in this case sand will flow direct from sand-box to left side of trap and through sand discharge-pipe by gravity. When using the pneumatic,

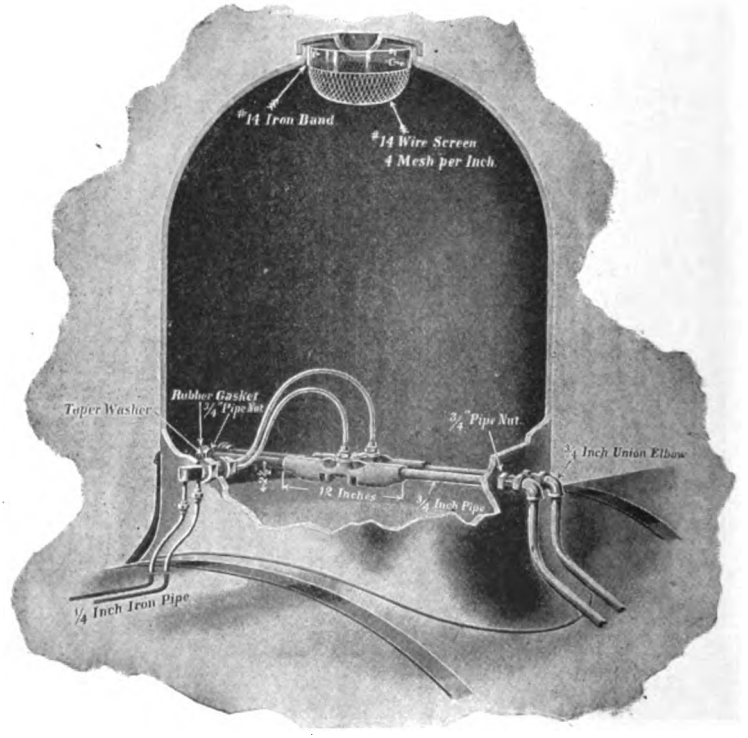

FIG. 271.—THE "SHE" SANDER.

the air issuing from nozzle in trap will blow sand over top of partition into the left side, and out of the discharge-pipe to rail, the right side of trap being full of sand by pipe leading into that side from sand-box.

This is called the auxiliary passage when this sander is applied to old sand-boxes.

SHE SANDER (FIG. 271).

This device is entirely within the sand-box and is a siphon ejector. This form is designed to carry the sand to the rail with great velocity and to use a small amount of air to operate it, so arranged that the air-nozzles are always out of the sand; the siphon being in the centre of the sand-box, where the sand is the driest. It is adapted to be used where sand is baked or becomes damp. Fig. 272 shows the parts in detail. The siphon is formed of a single casting having a pipe connection at each end, bell-mouthed openings each side of centre line, with deflecting wings in front of openings. Above the centre line of openings are ports with a pipe connection to these ports from air-pipes; these ports form the air-nozzles, one each way. The discharge-pipes at each end of siphon lead down to track. The air-pipes are connected, as in the other form of sanders, in cab.

The action is as follows: When air-valve in cab is opened the air issues from nozzles in siphon into the bell-mouth openings, drawing the sand along with it, then forcing it out the discharge-pipe onto rail. Fig. 272 shows the various parts in detail, while Fig. 271 shows the piping. Fig. 271 is the arrangement of valves and piping for the automatic sanding of the track in connection with the engineer's brake-valve. When set to operate with emergency application of brakes,

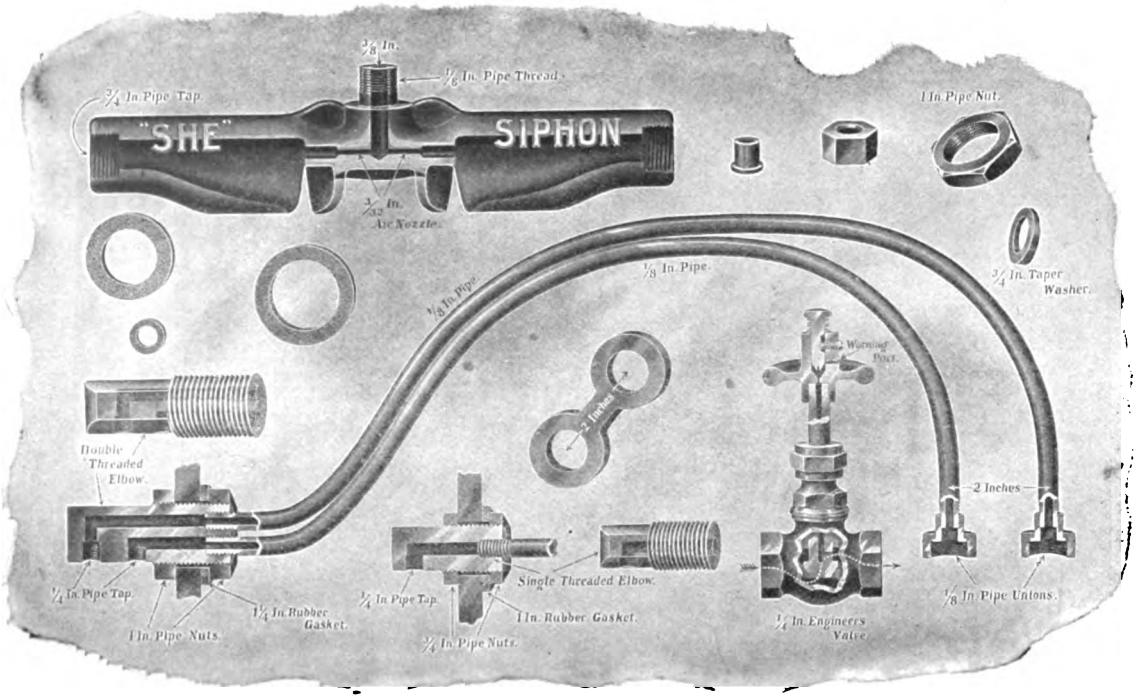

FIG. 272.—DETAILS OF "SHE" SANDER.

the automatic port in brake-valve is brought in service, and the air escapes through port into pipe leading to sanding device, and discharging sand on the track, with the attention of the engineer. The warning- and hand-operated valve is also shown, so that either can be used.

CHAPTER XX.

LOCOMOTIVE VALVE MECHANISM.

THE introduction of the compound locomotive using four cylinders requires several means for transmitting the motion from the eccentrics to the valve, and as these different motions are in daily use on many of the railroads, it is desirable that a clear description be given. The position of cylinders, valves, and number of driving-axles governs the different forms of construction. The number of parts has increased over the older type of motion used to drive the valves in simple engines (single-expansion). Therefore the increase in number of parts in the mechanism, or new principles, causes the men handling the locomotive to give more thought to the operation and construction of such parts, enabling them to quickly overcome delay where a breakdown occurs. The several types of gear shown are mostly used in connection with the Baldwin compound. When the L.P. cylinder is above the centre line through axles, the valve-motion is called direct acting. When the low pressure is below the centre line, the motion used is called indirect acting. In Fig. 273 is shown a direct motion, as applied to either a simple or compound engine. As shown, the direction of rotation is from left to right, and the valve is taking steam in front port, the crank-pin being on the forward centre, the movement of piston-head towards the back end of cylinder. The link is shown in mid-gear position, thus causing the valve to be on lead. These drawings are made this way in order to give a clear

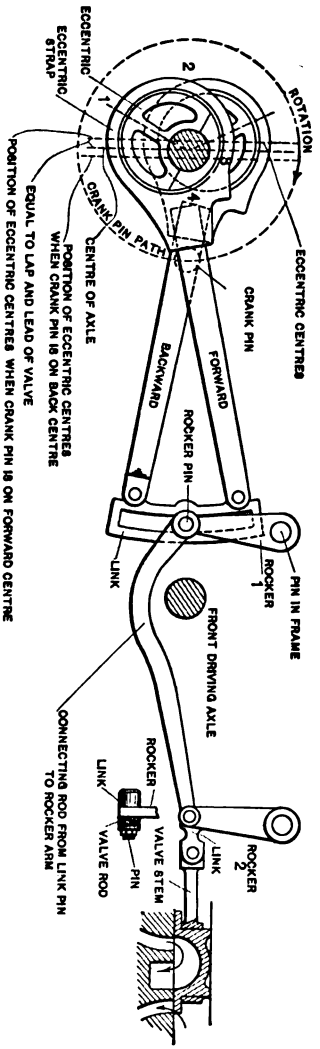

FIG. 273.—DIRECT VALVE MOTION FOR ENGINES USING A SLIDE-VALVE OR USING A PISTON-VALVE WITH FOUR-CYLINDER COMPOUND ENGINES.

outline. In the direct motion shown, the centre of the eccentrics are back of the centre of driving-axle, as clearly shown. When crank-pin is on forward centre the eccentric-rods are crossed, the inside eccentric-rod being attached to the top of link, the outside eccentric-rod to the bottom. In this motion the double rocker-arm is not used as in indirect motion; a rocker-arm or carrier swings on a pin or bearing attached to any convenient point on frame; a pin projects through the lower end of rocker-arm. That portion next to link extends through link-block (see Fig. 273) Attached to the pin on the outside of rocker-arm is the connecting-rod or link.* Another rocker-arm is attached to the forward end of this valve-rod supported as first rocker-arm; this forward arm acts as a carrier for connecting-rod and stem; a pin extends through the lower end of rocker-arm 2; a link is connected to this pin and valve-stem. The purpose of this link is to compensate for the arc described by the lower end of rocker-arm and prevent springing of valve-stem out of line. The rocker-arm and link obviate the use of a small cross-head, to be described further. The connecting-rod is bent down so as to clear the forward driving-axle. In rotating, the forward eccentric will draw the top of link towards the axle until the centre arrives at the extreme point of its travel, as 2, Fig. 273; the valve should be wide open if in full gear. When the centre of eccentric travels from 2 to 3 the forward eccentric-rod will push the top of link towards the valve and cause the valve to close the front port, and when the

* The connecting-rod in this motion performs the same action as the valve-rod of other motions, as it drives the valve direct.

crank-pin is on the back centre, the centre of the eccentrics should be the same distance ahead of the centre of axle as they are behind the centre of axle when the crank-pin is on the forward centre. The backward eccentric or one connected to lower end of link moves in a direction opposite to that of the forward eccentric, and does not control the movement of valve when in the forward gear, as above described. When the crank-pin is on the back centre the eccentric-rods will be open and not crossed, as when on the forward centre.

When the crank-pin leaves the back centre and travels to top quarter, the centre of forward eccentric will travel from 3 to 4, the extreme travel in that direction; this will cause the forward rod to push link towards the valve and open wide the back port. When the crank-pin travels from top quarter to the forward centre the eccentric centre will travel from 4 to 1; this will cause the forward eccentric-rod to pull link towards axle and close the back steam-port and valve to be in position shown in Fig. 273, as on lead forward steam-port. This describes the action of the eccentric controlling the motion in one direction. The action of the backward eccentric in either direction can easily be traced; the exhaust control is the same as with other motions. In this motion, when running forward or backward, the centre of eccentric leads the crank-pin.

When setting up an engine using the direct motion, care must be taken that the eccentrics are set as in Fig. 273. As a rule the men setting valves on locomotives are used to the indirect motion. If the direct-motion eccentrics and rods are set as in indirect motion,

the valve would travel in opposition to the piston-head; if the centres of eccentrics were set as in indirect motion, but with the eccentric-rods crossed, the crank-pin on the forward centre, the valve would overlap the forward port the width of the lap and lead of valve or linear advance of centre of eccentrics, leaving back port open width of lead. When on the back centre the valve would open the forward port this distance and in opposition to piston-head.

When a link-hanger is broken what should be done?

If desired to run, using steam on that side, the link should be dropped down on top of link-block, first inserting a block or waste between the link and block to prevent cutting. The rocker-arm 1 will carry the link and connecting-rod.

When rocker-pin is broken or disconnected on rocker-arm next to link?

The broken part of pin should be taken out, and it should be seen that the link will clear the rocker-arm, the valve placed in centre of seat to close ports, the valve-stem clamped to hold valve in position, the main rod taken down if far to run. If pin should break that carries the forward end of connecting-rod, the rod should be taken down, valve clamped in centre of seat, and main rod disconnected as before. When the connecting-rod is above the axle it need not be taken down, but tied up to clear, if link-block pin is broken.

If valve-stem should break, or link between rocker-arm and stem, what should be done?

The valve should be placed in centre of seat, clamped in position, and the link taken out. Be sure the

rocker-arm clears stem. Take down main rod and proceed with one side as usual; the other portion of motion can remain in position.

Broken connecting-rod?

Take down broken rod, centre valve on seat; take down main rod and proceed with one side.

If pin in rocker-arm next to link should break, requiring the pin to be taken out as a whole, what should be done?

The connecting-rod taken down, and disconnect as usual; the rocker-arm tied up to clear.

INDIRECT MOTION.

Fig. 274 shows the usual indirect valve-motion used on locomotives employing the upper and lower rocker-arms. The difference between the usual construction and Fig. 274 is in the position of rocker-shaft and means for connecting the lower rocker-arm and the link-block. As shown, the rocker-shaft is set back of the link and close to the eccentric. This permits the whole motion to be set between driving-axles and between the first and second pair of drivers. The reason why it is desirable to place the motion forward is due to the large fire-box used on such engines, the third set of drivers being well under the fire-box; another reason for placing the rocker-shaft in the position shown, is to lengthen the valve-rod, which will allow the rod to adjust itself to the radius of rocker-pin as it swings back and forth. If the rocker-arms were placed in the usual position, directly alongside of the link, the rod would be so short that some device as a

yoke and sliding-block or link would have to be used to compensate for the radius. To drive the rocker-arms a connecting-rod or link extends from the lower rocker-arm to the supporting or swing-link attached to any convenient point ahead of the reversing or slotted link, which drives the valves; each end of this rod is attached by pins, making it free to swing. Opposite the reversing link a pin is connected to the rod; this pin passes into the link-block over which the link slides.

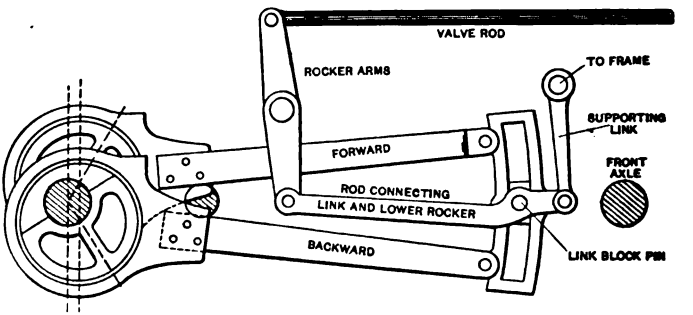

FIG. 274.—INDIRECT MOTION—ROCKER-ARMS BACK OF LINK.

It will be seen in the drawings that the centre of eccentrics are set ahead of the centre of axle, and the crank-pin is on forward centre; the eccentric-rods are open. The fact that the rocker-shaft is back of the reversing link does not alter the travel of valve, as in the position shown in Fig. 274 the valve would open the forward port. When in full gear, the opening would be equal to the lap and lead at which the valve was set. In mid-gear, as in the drawing, the opening would be greater, due to the fact that the link is controlled by both eccentrics and their centres are the same distance ahead

of the centre of axle when crank-pin is on true centre. The back port will be open to the same extent when on back centre from the same cause. In position shown in drawing, it is to be understood that the rod connecting the lower rocker-arm with the link-block does not raise or lower, only that due to the arc swung through by the rocker-pin and the supporting link, but the main link is raised and lowered by the usual means, sliding over the link-block. This motion is used with the piston-valve in four-cylinder compounds or with the plain slide-valve.

Fig. 275 shows another means for driving the valve from the link. In this case the motion is used on a compound engine, wherein the H.P. cylinder is above the L.P.; therefore the valve is placed sufficiently high to use a double rocker-arm, which is placed ahead of the reversing link. At any suitable point in this construction a connecting-link or rod is used between the link and lower rocker-arm; one end is attached to the link-block pin, while the other is attached to the rocker-pin. To support this rod there is provided a swinging or supporting link, placed ahead of the reversing or slotted link; one end is pivoted to any convenient point, in this case the girt or yoke across the frame. The lower end is attached to the rod. In order to avoid the forward driving-axle, the rod is bent so as to pass below the axle and then to the rocker-arm; when so desired, the rod is bent so as to pass above the axle, as dotted lines, due to the short distance between the top of upper rocker-arm and the stuffing-box on valve-chest; it requires a valve-stem, using a yoke in which slides a block; the upper rocker-pin passes through this

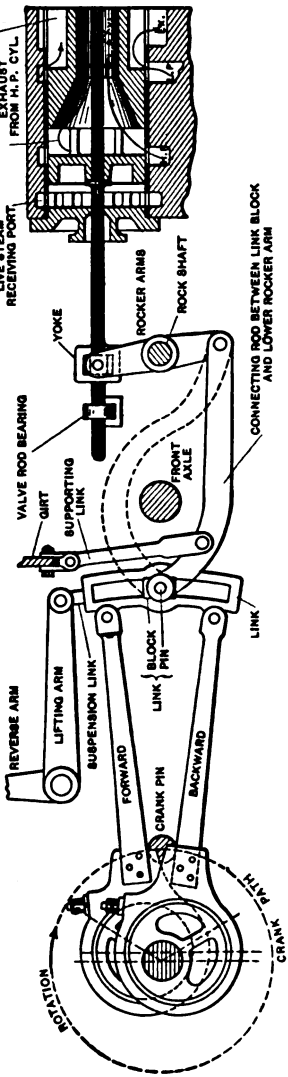

FIG. 275.—INDIRECT-MOTION PISTON-VALVE FOR FOUR-CYLINDER COMPOUND.

block, the back end of stem being carried in a bearing, the valve thus travelling in a straight line. The drawing shows a sectional view of half of a piston-valve used in four-cylinder compounds.

The valve-motion in Figs. 276 and 277* shows some modifications as used for freight engines using large fire-box. In this form the idea is to equalize the points of suspension and motion. In former motions shown, the rod connecting the link-block and lower rocker-arm was bent so as to pass above or below the driving-axle; also the connecting-rod was attached to link-block at one side. It will be seen in Figs. 276 and 277 that the link-saddle spans the link, being attached to the back and passing around each side with the saddle-pins each way; the saddle is made to clear the link-block and connecting-link or rod when the reversing link is raised or lowered to change the travel of valve. Fig. 277 shows a cross-section through link, link-pin, saddle, and rod. The dipping- or lifting-arm has a pin projecting each side and in line with the saddle-pins, the link-hangers or suspension-links are attached to these pins; by this means the weight and thrust on reversing link are carried on each side of the centre line of link, thus overcoming side thrust.

The connecting-rod between link-block and lower rocker-arm is made in three parts and enclosing the axle forming a yoke; the two portions back of the axle extend back to the link-block pin, spanning the link, the link-block pin passing through them and block; between link and axle are two pins, one on each sec-

*In use on Pennsylvania Railroad.

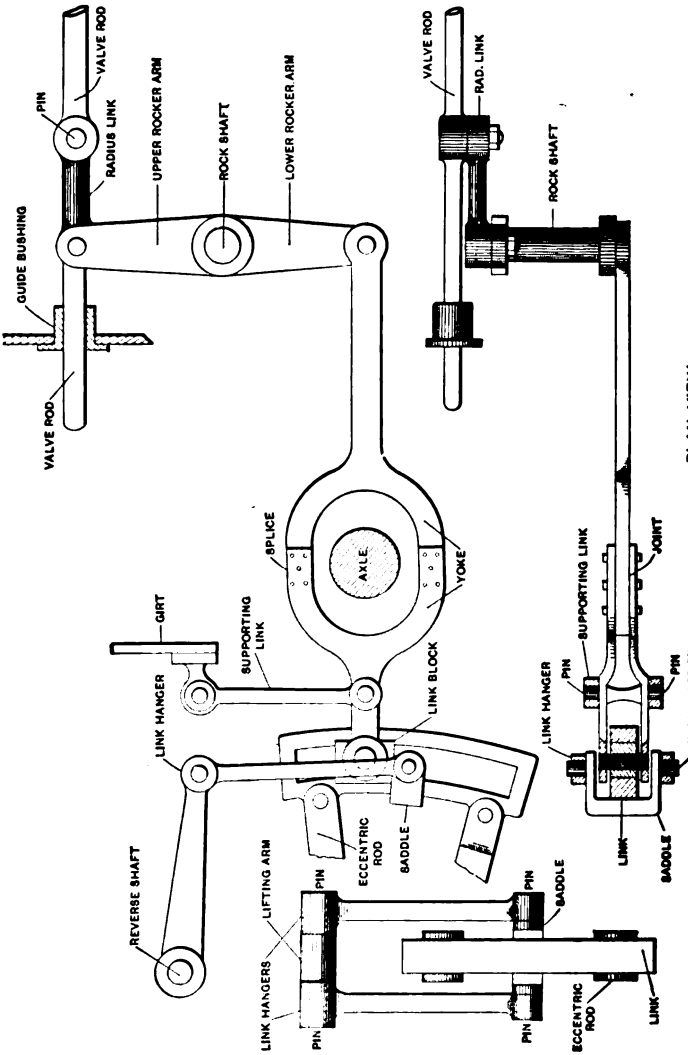

FIGS. 276 AND 277.—VALVE-MOTION FOR HEAVY FREIGHT SERVICE.

tion; the two rear sections are brought together and the forward section of rod is placed between, and the whole bolted together top and bottom.

Attached to the pins between link and axle are two supporting links which carry the back end of rod and allow it to travel back and forth. There are two links, one on each side. The suspension is perfectly balanced, without any tendency to twist; also the reversing link will drive the rod and block without side thrust or twist on account of the back end of rod spanning the link. By providing a yoked rod, the strain is evenly divided on each side of axle, thus preventing springing, as sometimes occurs with a single rod bent to clear axle. The rocker-arm in this case is close to the steam-chest and means are provided to allow a short valve-rod to be used, by having a short link attached to the upper rocker-arm and a pin in valve-rod. The back end of valve-rod is carried in a bushing attached to guide yoke.

THE WALSCHAERT VALVE-GEAR AS APPLIED IN AMERICAN LOCOMOTIVE PRACTICE.

Fig. 278 shows the application of the Walschaert valve-gear, which is modified to suit the class of engine to which it is applied. In this figure there is provided a guide-bar upon which slides a cross-head. One end of this bar is fastened to the yoke which carries the main guide-bars; the other end is attached to the steam-chest. On the yoke is fixed a rocker-box. This bearing carries the rocker-arm to which is fixed the link. Instead of attaching the rod that connects the link and the valve-crank to the bottom of the link, as in foreign practice, the rod is attached to the rocker-arm, which causes the link to rock back and forth, the rocker-shaft forming the axis. The curvature of the link is toward the steam-chest, and the radius is governed by the length of the radius-rod, or from the centre of the link to centre of the pin on lap-and-lead lever. The one end of radius-rod spans the link, and a pin passes through this portion and through the block in link. The lap-and-lead lever has one end attached to the main cross-head by a link which allows for the radius formed by the lap-and-lead lever in passing from one extreme point to the other, the upper end of it is attached to the small cross-head by a pin. To this cross-head is fixed the valve-stem and valve. The distance that the pin attached to small cross-head is above the fulcrum or pin to which radius rod is attached depends upon the amount of lap and lead of valve and the movement of the lower end of lever. Without this lever in the valve-gear the valve would be in the centre

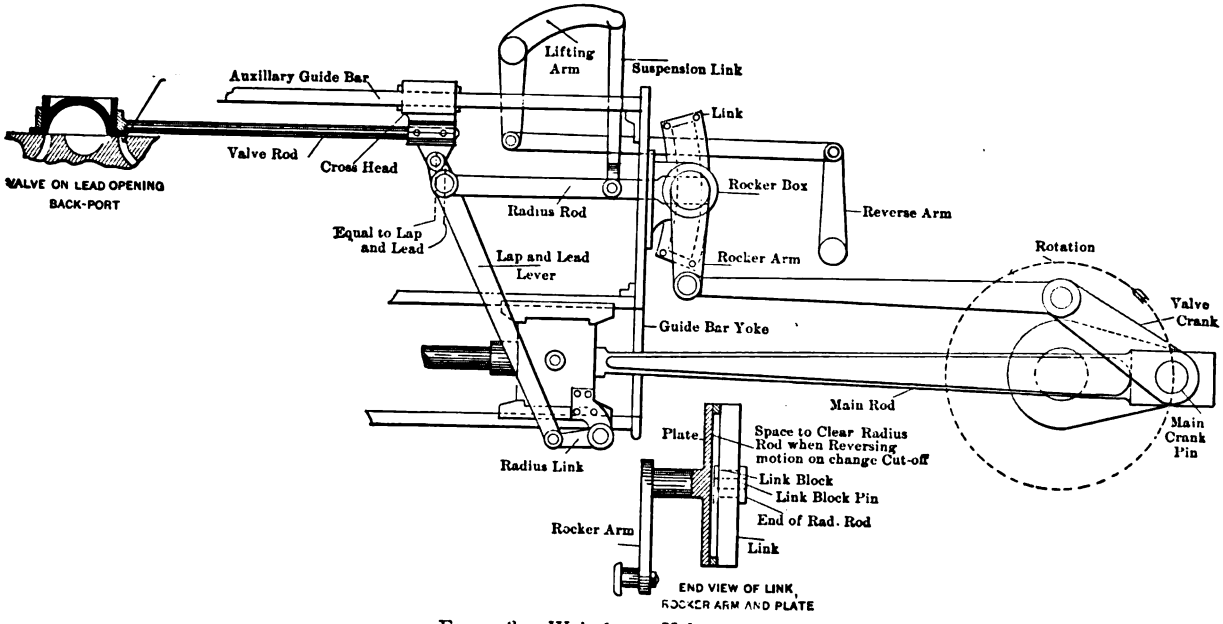

FIG. 278.—Walschaert Valve-gear.

of its travel, when main crank-pin would be on either centre. In order that the radius-rod which spans the link shall pass up and down free when it is raised or lowered to reverse the motion of the engine, the rocker-shaft at the link side has a plate the size of the link to which the link is fastened at each end. Spacing-blocks are between the side of link and the plate, forming a clearance space for the end of radius-rod. In this case the radius-rod has the suspension-link attached at a point between the lead-lever and the link, the reverse-shaft being above the guide-bars and close to boiler. A reach-rod is connected to another reversing-arm and cross-shaft, which also has another arm connected to it and the reverse-lever in the cab. A reach-rod passes to the reversing-shaft on the other side of engine for the gear of that side. By placing the reversing-arms in the position shown it requires a shorter movement of lifting-arms to reverse the engine and also to change the point of cut-off. The valve crank-pin leads the main crank-pin in running in the forward motion, and the link-block will be in the bottom half of link, a position opposite to that of the Stephenson gear, the Walschaert being equivalent to a direct motion, while the Stephenson is indirect, when using rocker-arms and using a valve taking steam, as shown in Fig. 278. When using an internal-admission valve, as a piston-valve, the link-block would have to be in the top half of link and the valve would move in an opposite direction to that of the piston-head in the first part of its travel or while opening the steam-port. In order that the link-block should be in the bottom half of the link in the forward motion, with an internal admission-valve using the Walschaert gear, the valve-crank should

be placed to follow the main crank-pin in either case. The valve crank-pin and the main crank-pin are set at 90 degrees apart or at right angles. In the drawing the valve is shown as being in the lead or just opening the steam-port, the crank-pin on back centre and in the forward motion; the lead is equal at all points in the motion. The position of valve crank-pin or distance from centre of axle is exaggerated in the drawings, which are diagrammatic only.

Fig. 279 shows another modification, in which the design required the use of short connections between the valve and lead-lever. In this case there is used a rocker-shaft above the main guide-bars which has two rocker-arms on it. This shaft is carried in a bearing; the upper end of lead-lever is attached to the one rocker-arm as shown. The valve-rod has a yoke on it forming a part thereof, and in this yoke is a sliding-block; the pin of the other rocker-arm fits in this block. The back end of valve-rod is carried in a bearing. This construction permits of a very short rod and connection. The lifting or suspension-link in this case is attached to the extreme outer end of radius-rod which spans the link and has an extension to which the suspension-link is attached. The usual reversing-shaft is used in this case. The driving-link is carried by a shaft, upon which it swings or oscillates, and on the lower end of the link there is an extension drilled to receive a pin. To this extension is connected the rod from valve-crank, and differs from Fig. 278 in this respect, that there is no rocker-arm to operate link. The general principle of this gear remains the same; the modifications are made to suit the design of locomotive. In using this motion there is no gear under

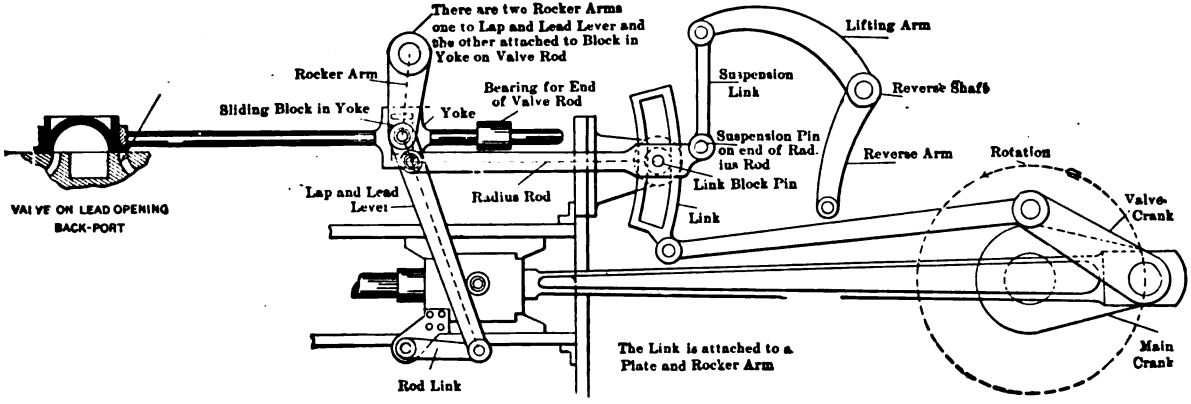
There are two Rocker Arms one to Lap and Lead Lever and the other attached to Block in Yoke on Valve Rod
Lifting Arm
Rocker Arm
Suspension Link
Reverse Shaft
Bearing for End of Valve Rod
Sliding Block in Yoke
Yoke
Suspension Pin on end of Radius Rod
Reverse Arm
Rotation
Lap and Lead Lever
Radius Rod
Link Block Pin
Link
Valve Crank
VALVE ON LEAD OPENING BACK-PORT
The Link is attached to a Plate and Rocker Arm
Main Crank
Rod Link

FIG. 279.—Walschaert Valve-gear.

the boiler, the eccentrics and straps are discarded, and all moving parts are visible to the engineer and inspector.

Accidents to Walschaert Gear.

In a case where the ports must be covered, the valve should be set in the centre of its travel covering the ports. When using the gear as in Fig. 278, having valve-rod driven by rocker-arm and yoke, the pin can be taken out of rocker-arm with it. Be sure that the rocker clears the yoke; the rest of the gear can remain up.

If a radius-rod or link-block pin should break the radius-rod should be taken down, the block taken out of links, the valve centred and clamped to hold in centre of seat; the lap-and-lead lever can remain in position and swing from rocker-arm if used on cross-head. Be sure that the valve-rod is held rigid.

With a broken lap-and-lead lever the ports should be covered, lever taken down, radius-rod and valve fastened in centre of seat (main rod taken down in all cases requiring ports covered).

A broken valve, crank-pin, or rod connecting crank to link would require covering of ports, taking down of broken parts, disconnecting lead-lever from main cross-head, taking care that lead-lever clears the latter; clamp valve in position.

When lifting-arm or suspension-link is broken, and it is desired to run in with both sides, a block should be put in link between link-block and link, top or bottom, depending upon the direction in which engine is running.

CHAPTER XXI.

LIQUID FUEL.

THE heat generated by petroleum fire is much more uniform than that produced by wood or coal. The fire is not as sensitive to the fluctuations of the weather as are other fires. A great advantage is the easy manner in which it can be controlled by the adjusting of a valve; a constant supply of steam can be supplied without the reduction of pressure by replenishing of fuel, as in coal fires. Air-holes and dead spots are not present. A constant degree of heat can be maintained by the adjustment of the regulating-valve. Other important features of oil fuel are as follows: Complete combustion; no ashes; absence of sparks and cinders; and ability to extinguish the flame in case of danger. There being no necessity to open the fire-door for the introduction of fuel, there is no reduction of pressure, chilling of flues, sheets, and leaking due to this cause. The absence of sulphur in the fuel makes its action on the boiler-plate much less destructive than when using coal as fuel.

Oil or residuum is now being used on locomotives. In the construction of the fire-boxes it does not require a combustion-chamber as with coal-burning fire-box. The latter, being solid, requires more time for decomposition and the elimination of the products and supporters of combustion; compared with oil the combustion of coal is slow and requires aid by strong draft. Oil, having no ash or refuse when properly

burned, requires much less space for combustion, for the reason that, being a liquid and the compound of gases being highly inflammable when united in proper proportions, it gives off its heat with utmost rapidity and at the point of ignition is all ready for combustion. By burning oil with a clear white fire it is free from smoke, dust, and soot; also in locomotives the exhaust-nozzles can be made the maximum size, because a strong blast is not required for combustion. This is an item to be considered, as the power of the engine is increased by the reduction of back-pressure against the piston-head.

The possibility of explosion from liquid fuel is small when proper precaution is taken in operating the burners. The one cause of danger lies in the clogging up of the burner or pipe-connections; where more than one burner is used a partial extinction of the fire may take place and the reignition of the oil is delayed by the cooling of the bricks, and the gas is generated in the presence of the air drawn in by the draft; an explosive mixture is thus formed, which requires only the presence of flame to cause it to explode. The term "snapping out" is applied to the above action, but by proper proportioning of pipes and burner, with proper means to prevent dirt getting in and clogging pipes, there is no danger.

In lighting up oil fires care must be exercised to prevent an explosion of the accumulated gases, and the person lighting up should keep away from the fire-door, as there is an outrush of gases in practice; this, however, can be reduced to a minimum by the following procedure: It is necessary to introduce some waste or wood in flames before commencing to spray oil fuel,

in order to insure absolute freedom from the risk of mishap. A little oil allowed to run in the fire-box over some lighted waste will provide a good flame over which the oil may be sprayed and ignited. After allowing this amount of oil to enter the furnace, it is advisable to commence by admitting steam first and then gradually opening oil-valves to burners until the desired heat is obtained.

In order to prevent danger from oil flames, in case of an accident to a locomotive burning oil, automatic devices are used to close the oil-valve in the tank, thereby extinguishing the flame in the fire-box. A simple means is to have a weighted valve in the pipe between engine and tender, with a cord so fixed that it can be operated by hand or broken by concussion or other means.

The following data relative to heating capacity of petroleum are derived from actual tests. The heat of crude petroleum is 20,240 heat-units, while the heat-units pound of coal = 14,300; but this will be reduced by reason of impurities, according to some authorities, to 8000 heat-units pure carbon, as charcoal contains 14,500 heat-units. An evaporation of 17.56 to 18.5 pounds of water has been obtained in a test with oil, against $7\frac{1}{2}$* pounds of water evaporated with a pound of coal. These tests were made with water from and at 212° F. Three barrels of oil, each of 42 gallons, weigh 913.5 pounds and slightly exceed the

* By careful operation $9\frac{1}{2}$ to 10 pounds of water per pound of coal have been evaporated. The evaporation of $7\frac{1}{2}$ lbs. is in every-day practice.

heating capacity of one ton of coal. The chemical composition of petroleum oils are, as per table, from

			Mean.	Authority.
71.42 carbon		73.77 carbon	72.60	D. K. C.
28.58 hydrogen	to	26.23 hydrogen	27.40	
100.00		100.00	100.00	

The specific gravity ranges from .628 to .792. The boiling-point ranges from 86° to 495° F. The theoretical total heating power ranges from 28,087 to 26,975 units of heat, equivalent to the evaporation, at 212°, of from 25.17 to 24.17 pounds of water supplied at 62°, or from 29.08 to 27.92 pounds of water supplied at 212°.

OIL-BURNING LOCOMOTIVES.

Owing to the recent discovery of vast oil-fields in the southwestern portion of the United States, oil-burning locomotives have been designed and are in operation hauling trains. Oil fuel has been used in Russia for years past, using the Urquhart system; also in England

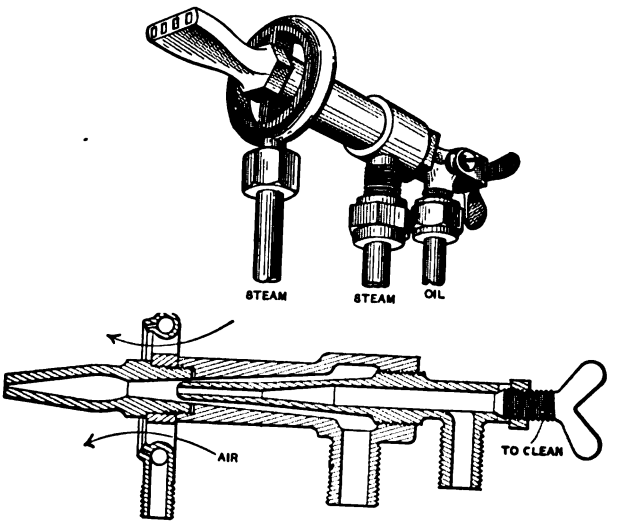

FIGS. 280 AND 281.—OIL-INJECTOR FOR BURNING OIL.

under the Holden system. There are various methods for burning oil, and that which is best adapted to locomotives is the jet-burner, in which the burner takes the form of an injector, as shown in Figs. 280 and 281, a sectional and perspective view of the burner used

in the Holden system. This is the general form of burners. As shown, the outer shell terminates at one end in a flat nozzle having three holes in it; another nozzle projects into the body, being tapered with a small opening in the end. This nozzle projects back beyond the main portion of burner with a pipe-threaded connection. The outer shell has also a connection projecting downward. The inner nozzle is screwed into the outer shell. Surrounding the forward end of burner is a hollow ring with small holes towards the end of burner; this ring is connected to the steam-supply by a pipe. This is called an air-inducer, to induce a current of air. The outer nozzle is connected to the steam-boiler, while the inner nozzle is connected to oil-tank.

Fig. 282 shows the Holden locomotive equipped with combined coal- and oil-burners, using the above-described burner. In the back leg of fire-box are two pipes 6 inches in diameter; they are below the fire-door. The end of the oil-burners project into these openings. The oil-pipe leads back to the tank containing oil to be burned; this tank sets up above the water-space of tender so as to allow the oil to flow to burner by gravity. The steam connection is tapped into back head of boiler, as shown, with suitable valves for controlling. By this system coal and oil can be used at the same time; a thin layer of coal is spread over the grates, enough to prevent air holes; the ash-pan dampers are kept nearly closed; nearly the whole of the air needed for combustion enters either through the injector-tubes or the fire-door, which is kept open and fitted with a deflector, as when coal alone is

burned. If necessary, a change from liquid fuel to coal can be made while running. The exhaust-pipes are fitted with adjustable nozzle, which can be thrown in or out of action by a lever. When burning oil a very soft blast is required, using a large nozzle and

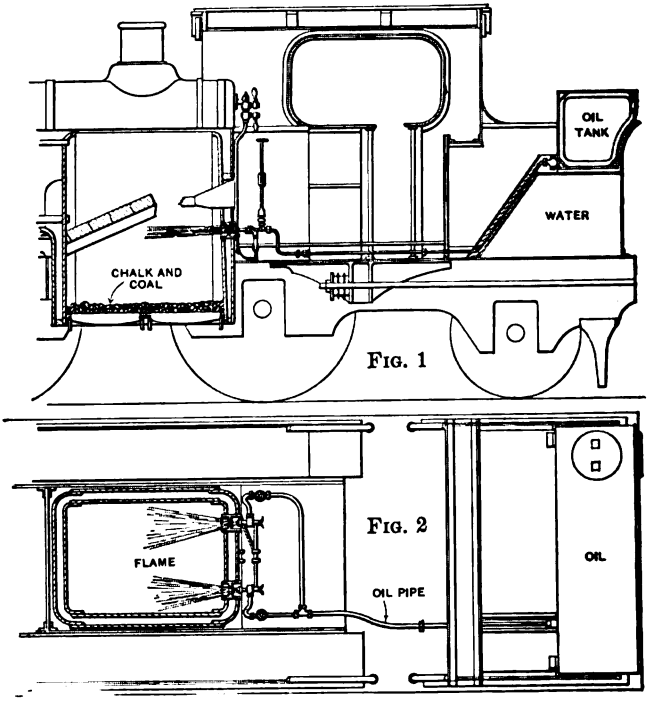

FIG. 282.—HOLDEN OIL-BURNING LOCOMOTIVE.

reducing the back pressure. The operation of burner is as follows: The valves being opened steam and oil flow into the ejector and combine, and are discharged into the fire-box in the form of a spray, which

is ignited; this combined steam and oil strikes the brick arch in fire-box, which is in an incandescent state, while the air for combustion is drawn in by the inducing-jet, the coal being supplied as required by hand. The fireman must regulate the oil- and steam-supply so that perfect combustion takes place without any smoke issuing, as this denotes unconsumed carbon. The liquid fuel used on these engines is one third green oil, two thirds tar.

VANDERBILT OIL-BURNING LOCOMOTIVE.

The Vanderbilt boiler is adapted to both coal and liquid fuel. The Southern Pacific Railroad has several of these engines in operation. Fig. 283 shows a cross-sectional view of the fire-box as equipped for oil burning. This fire-box being a single cylinder corrugated, is surrounded up the sides and bottom with fire-brick to prevent a direct impact of oil on them; also the fire-brick becomes incandescent and helps support combustion. The back end of fire-box is closed by sheet iron, which is lined inside with fire-brick; this carries the fire-door. Near the bottom of this rear extension are two dampers which are raised or lowered as desired. (See Fig. 284.) Between these two dampers is placed the oil-burner, which projects into the fire-box, as shown. This is of the injector type, with a flat nozzle, a connection for steam, and regulating-valve, as shown; also a pipe-connection to tank, a flexible slip-joint being provided between engine and tender. This engine uses a single burner. The tender is made up of two compartments: the lower portion contains the water, while

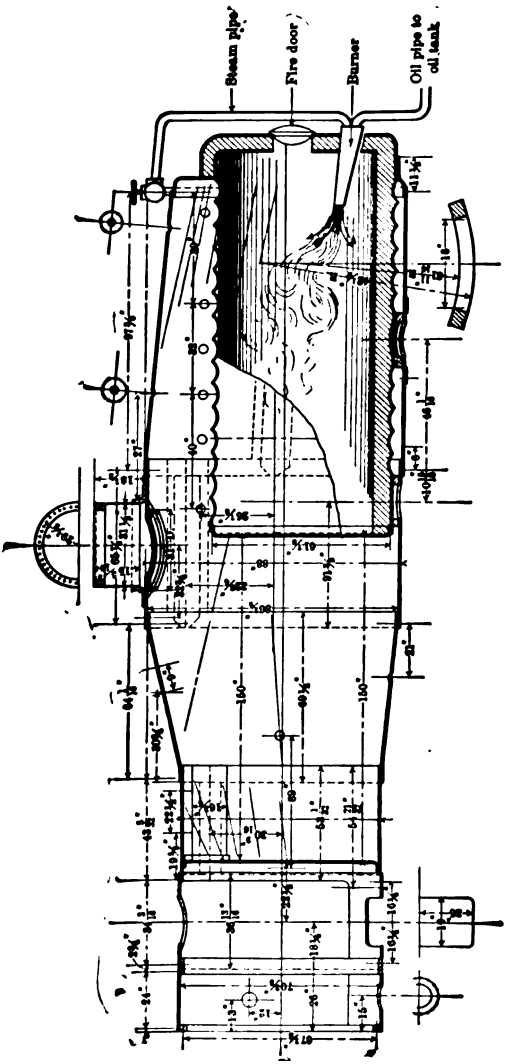

FIG. 283.—BRICK-LINED CORRUGATED FIRE-BOX OF VANDERBILT OIL-BURNING LOCOMOTIVE.

the top portion contains the oil; this has a sloping bottom, permitting the oil to gravitate to the burner. In this fire-box, using oil, there is no deflecting brick between the burner and flues. By putting in brick to form combustion-chamber and grate-bars this fire-box will be fitted to burn coal. Fig. 295 shows photo-

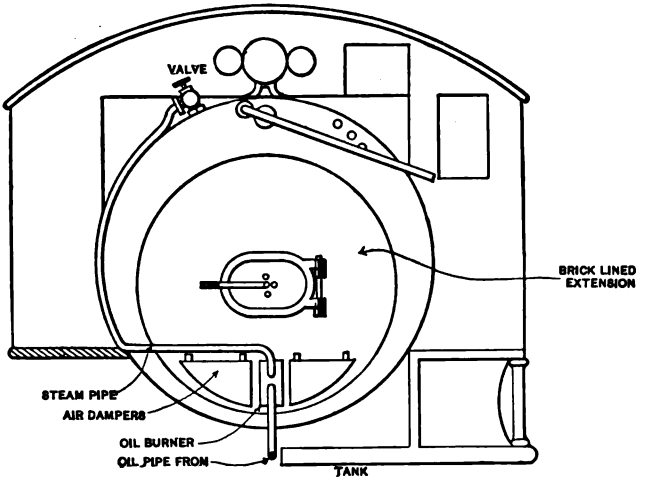

FIG. 284.—VANDERBILT OIL-BURNING LOCOMOTIVE.

graph of this form of tender. Mr. Vanderbilt also has designed his fire-box so that oil or coal can be used in the same construction. An oil-jet is placed in forward part of fire-box and the oil is sprayed around the fire-box above the grate; suitable piping is placed below the grate to burner with valve-connections on the outside to regulate the oil and steam.

PLAYER OIL-BURNING LOCOMOTIVE.

The Player locomotive for burning oil is a departure from the usual design. Instead of having a single fire-

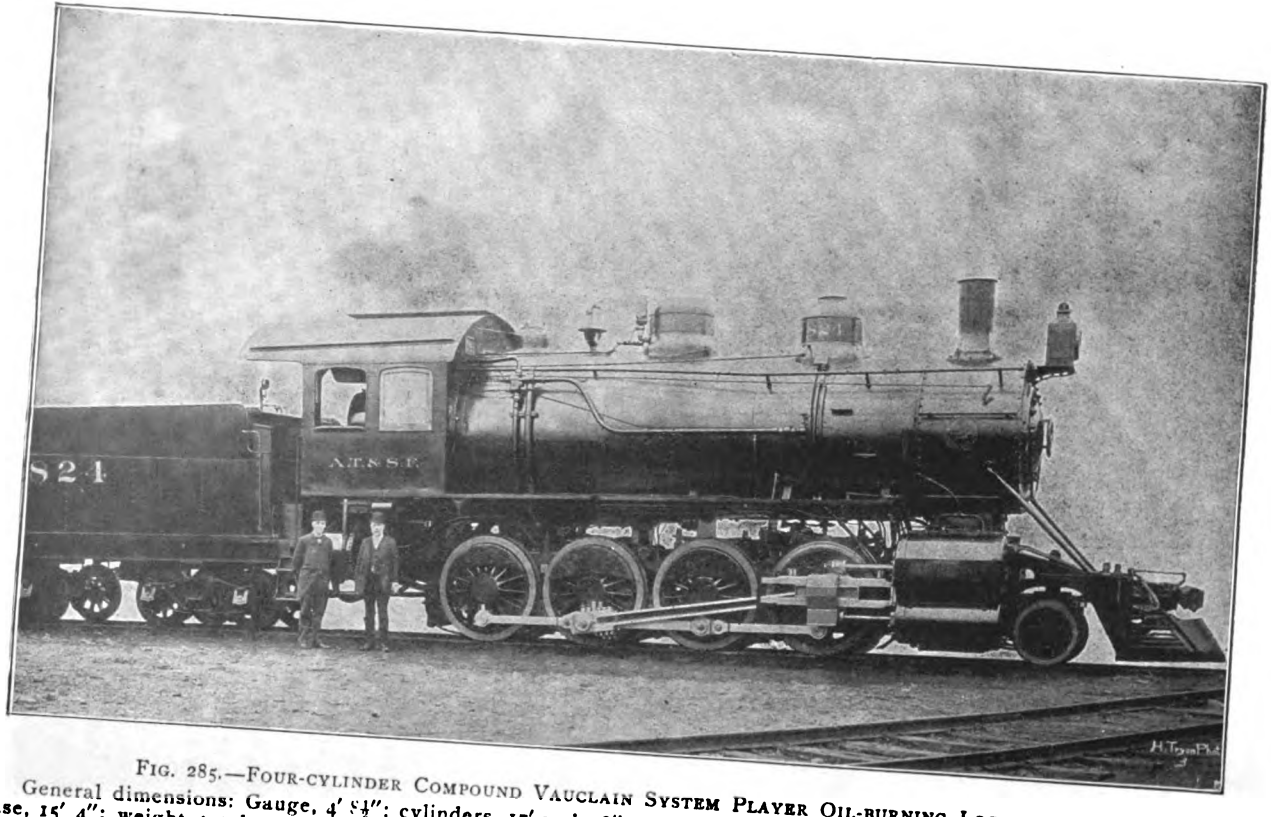

FIG. 285.—FOUR-CYLINDER COMPOUND VAUCLAIN SYSTEM PLAYER OIL-BURNING LOCOMOTIVE.

General dimensions: Gauge, 4′ 8½″; cylinders, 17′ and 28″ × 32″; drivers, 57″; total wheel-base, 24′ 6″; driving-wheel base, 15′ 4″; weight, total, about 211 620 pounds; weight on drivers, about 191,370 pounds. Player boiler: Diameter, 74″; number of tubes, 652; diameter of tubes, 1¾″; length of tubes, 13′ 7″. Fire-box, 3 tubes: Length, 84″; width inside diameter of tubes, 28″. Heating surface, fire-box, 165″; combustion chamber, 70″; tubes, 4031; total, 4266. Tank capacity: Water, 6000 gallons; oil, 2200 gallons.

box this engine has three tubes 28 inches in diameter and 84 inches long. Fig. 286 is sketch of boiler and fire-boxes. The tubes open into a combustion-chamber; the flues extend from combustion-chamber to front sheet in smoke-box. The purpose of using three tubes is to divide the heating effect and not concentrate all in one burner and tube. There is an extension from the back end of boiler. The three tubes open into this extension, which is fire-brick lined; into each tube projects a burner. The steam- and oil-connections are outside of this extension, as shown. At the bottom of the extension is a damper to regulate the amount of air for combustion. The tubes are brick-lined to protect the tube-plate. There is a bridge wall across the tube; the jet of oil strikes against this wall and is spread out against the walls of tube, which are lined; the flame passes into the combustion-chamber and from there passes into the flues. The course of gases is shown by the arrows in Fig. 286. In Fig. 287 is shown the three tubes and back end of boiler. The oil-burners or sprayers project into back end of tubes with the regulating-valves on the outside of extension, as shown in Fig. 288. The valve-rods are brought over to the left side of boiler-head and are held at position set for running by a thumb-latch and rack, as shown in sketch; the steam-pipes and valves are connected to a steam-chamber which has a single connection with valve to boiler; at the left side is shown a valve marked *air-valve*, with a pipe leading to an air-tank. Air or steam can be used with these burners, especially when starting with no steam in the boiler. The oil-pipes connect to a horizontal pipe below the deck floor; this

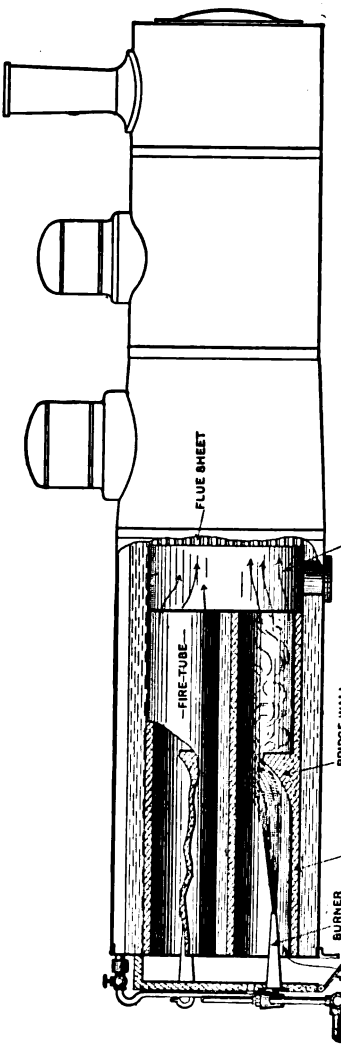

FIG. 286.—PLAYER BOILER.

is also connected to the oil-tank with a flexible or slip-joint pipe, so as to adjust itself to the motion between engine and tender. The air-damper is regulated by a lever extending into cab. One or more burners can be used at a time with this engine. A single burner

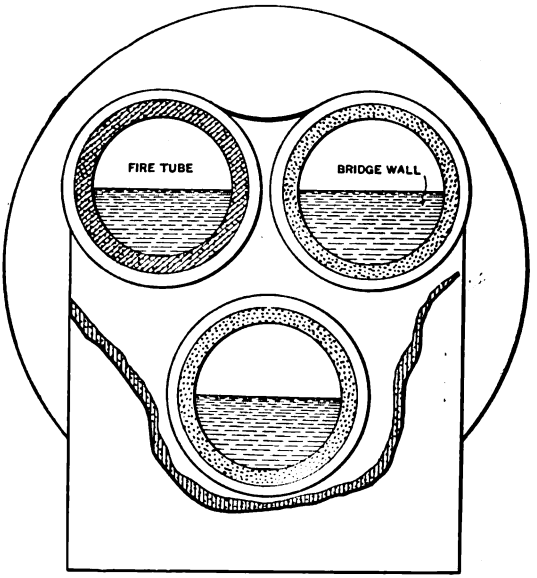

FIG. 287.—BACK END OF BOILER, SHOWING THREE FIRE-TUBES.

will raise the steam-pressure very quickly. The tender is made up of two compartments: the lower compartment is the water-tank, the upper one contains the oil; the top of the oil compartment is very strongly braced with angle iron to prevent sagging or bulging, due to the movement of engine. The capacity of tender is: water, 6000 gallons; oil, 2200 gallons. The general

dimensions of engine are given in Fig. 285, which is a photograph taken at the works; it is a four-cylinder compound engine, Vauclain system.

The following is a report on oil-burning locomotives

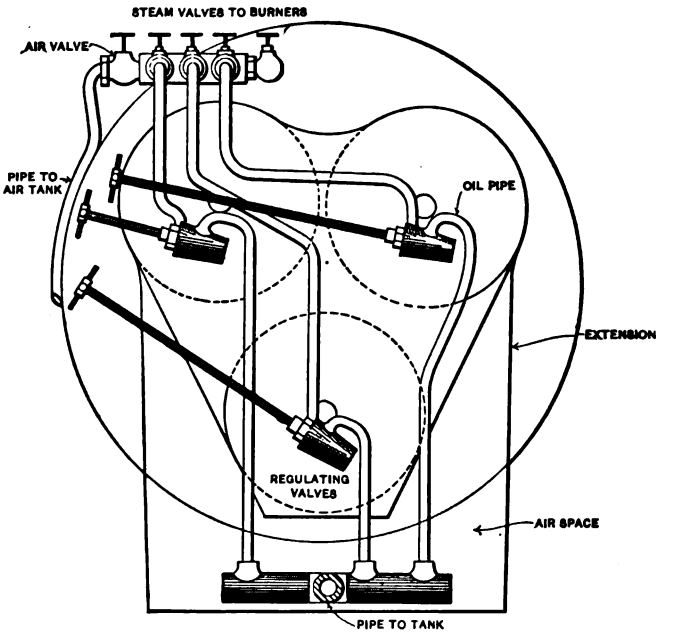

FIG. 288.—PLAN OF REGULATING VALVES FOR OIL-PIPES AND STEAM-VALVES.

used on the Russian railroads. Coal cost at time of report $5.29 per ton, while crude oil cost 81 cents per barrel, and three barrels of oil would do more work than a ton of coal.

The following table is from a report made by Mr. Urquhart, director:

Coal consumed per mile..... 87 pounds.
Petroleum..... 49 "
Saving in weight..... 44 per cent.
Cost of coal per mile..... 23 cents.
Cost of petroleum per mile..... 13 "
Saving in cost..... 43 per cent.

TABLE SHOWING COAL AND OIL CONSUMED WITH HOLDEN SYSTEM ON ENGLISH RAILWAYS.

	Miles Run.	Fuel Used (Pounds).				Cost.
		Coal.	Liquid Fuel.	Chalk.	Total.	
Liquid fuel, Engine 193.....	95¼	13,511	10,505	784	24,800	$33.99
Coal, Engine 194	95¼	27,738	.....	.....	27,738	44.33

RESULTS PER MILE.

Engine No.	Coal.	Fuel Used (Pounds).				Per Cent of Liquid Fuel and Chalk to Coal Used.
		Liquid Fuel.	Chalk.	Total.	Cost.	
					Cents.	
193	14.2	11.0	0.8	26.0	3.58	83
194	29.1	.....	.....	29.1	4.65	

Cost of coal per ton, $3.58; liquid fuel per gallon, 11 pounds, $1.25; chalk per ton, $1.32. (Chalk used for covering grate.)

THE MODERN LOCOMOTIVE BOILER AND FIRE-BOX.

The effort to get a large grate-area and heating-surface has caused changes in boiler design from time to time, with a consequent shifting of the centre of gravity to accommodate these changes. There are several different forms of fire-boxes in service, using different kinds of fuel. Fig. 289 is a wagon-top boiler with a narrow fire-box. This fire-box passes down between the frames and is therefore a deep fire-box; the crown-sheet has a slight radius to accommodate the radial stay-bolts that support the crown-sheet. Where crown-bars are used these bars span across the crown-sheet from side to side, with the ends resting on the corners; the crown-stays are attached to the crown-bars and crown-sheet, with sling-stays supporting the crown-bars also to the outer sheet. The back head is stayed by gusset-stays from the top sheet, also by longitudinal stay-rods. The same style boiler may have a shallow fire-box, which differs from a deep fire-box in that it sets above and over the frames. The deep fire-box is used for burning soft coal, while the shallow one is used for anthracite. In the effort to get an increased grate-area to burn a poor grade of coal or fine culm from the anthracite region, the Wootten type of boiler and fire-box was brought out, as shown in Fig. 290. This type was developed in 1877, and many were put in service and continue to be used. This construction caused the cab to be placed forward of the

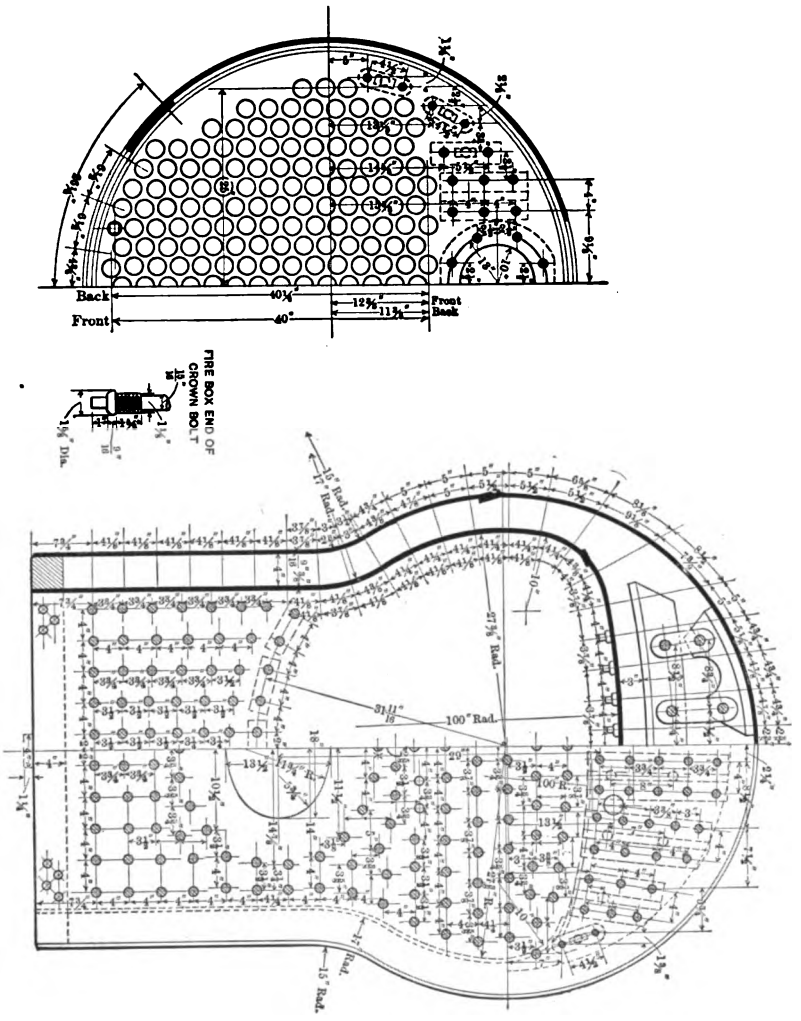

FIG. 289.—TRANSVERSE SECTION OF BOILER WITH NARROW FIRE-BOX.

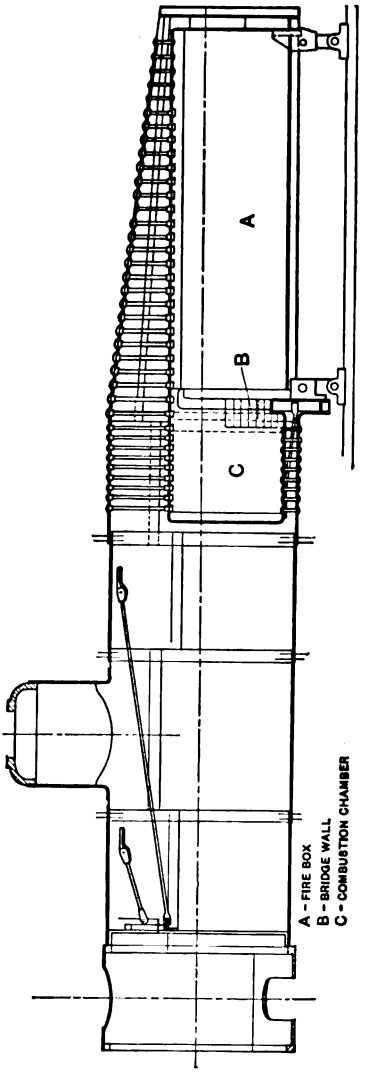

FIG. 290.—WOOTTEN BOILER, 1877.

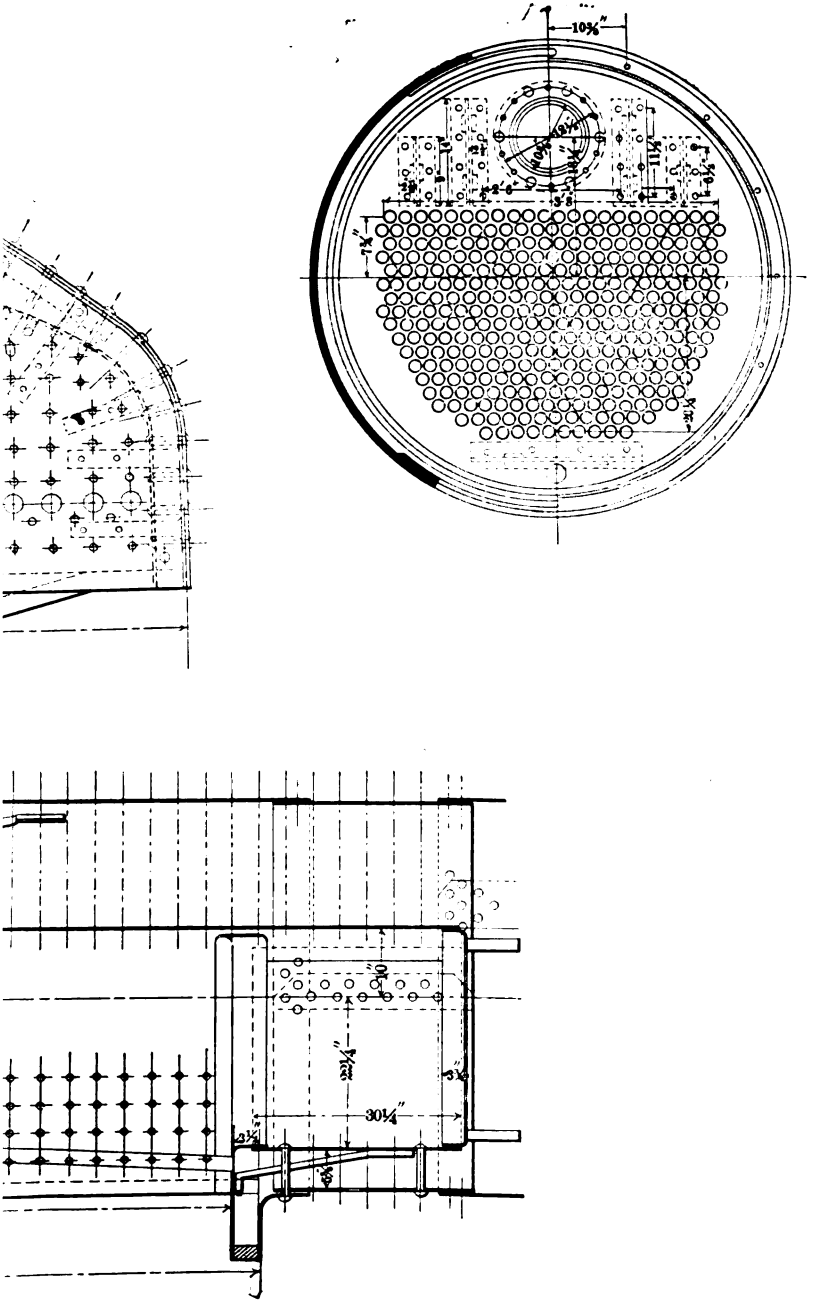

LONGITUDINAL AND TRANSVERSE SECTIONS.

[*To face page* 569.

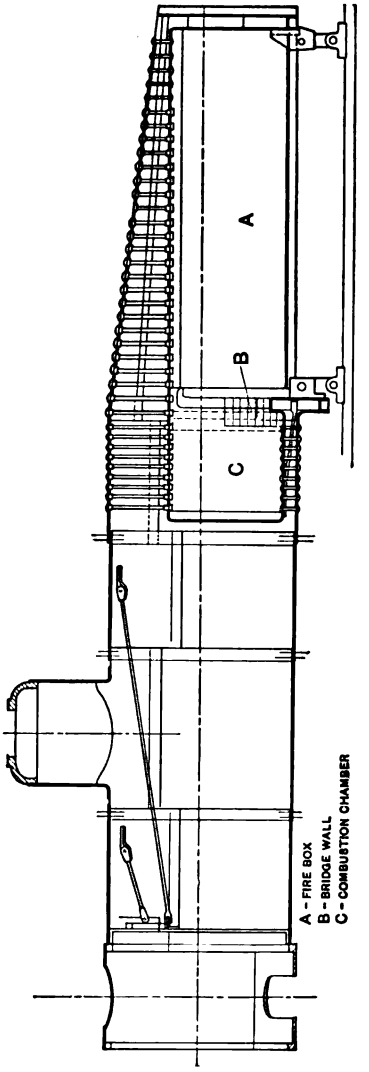

FIG. 290.—WOOTTEN BOILER, 1877.

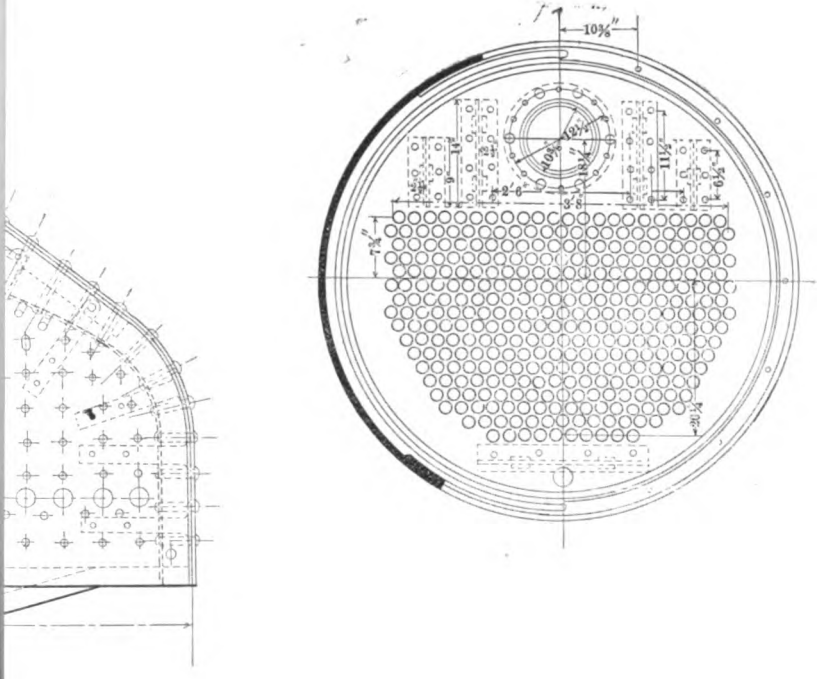

LONGITUDINAL AND TRANSVERSE SECTIONS.

[*To face page* 569.

fire-box, with the steam-dome in the cab.* The fire-box was spread out to a maximum limit each side of the cylindrical part of the boiler; this caused the fire-box to be raised to clear the driving-wheels, necessarily raising the centre of gravity of the boiler higher than the usual engine at that period. The dimensions of grate were about 8 × 8 feet, or 64 square feet. This made a very wide crown-sheet and a shallow fire-box; the depth from top of grate-bars to crown-sheet at back end being about 29 inches. A combustion-chamber was provided in the forward end; a bridge-wall of fire-brick was between this chamber and fire-box, as shown. In this type the top sheet over crown was sloped down to the back end, leaving a small water-space over the crown-sheet, a feature changed in later designs. This form of boiler required a great many crown stay-bolts, as the drawings show. In the later design of boiler using the Wootten fire-box the top sheet was carried back straight instead of sloping; this was a movement in the right direction, as it provided for a larger water- and steam-space over the crown-sheet, the top sheet from top radius to bend at the sides being flat. (See Fig. 291.) In the modified type of Wootten boiler, the diameter of the cylindrical part of the boiler was increased, which made the fire-box extend beyond the cylindrical portion a very short distance; the height from grate-bars to crown-sheet was increased and the combustion-chamber was omitted. The fire-brick arch, when using soft coal, is used with water-tubes supporting it, (Fig. 292.) In all these boilers two fire-doors are used in soft-coal burners,

* The dome is also placed back of the cab, over the crown.

and they burn very successfully the grade of coal for which they were designed. In Figs. 293 and

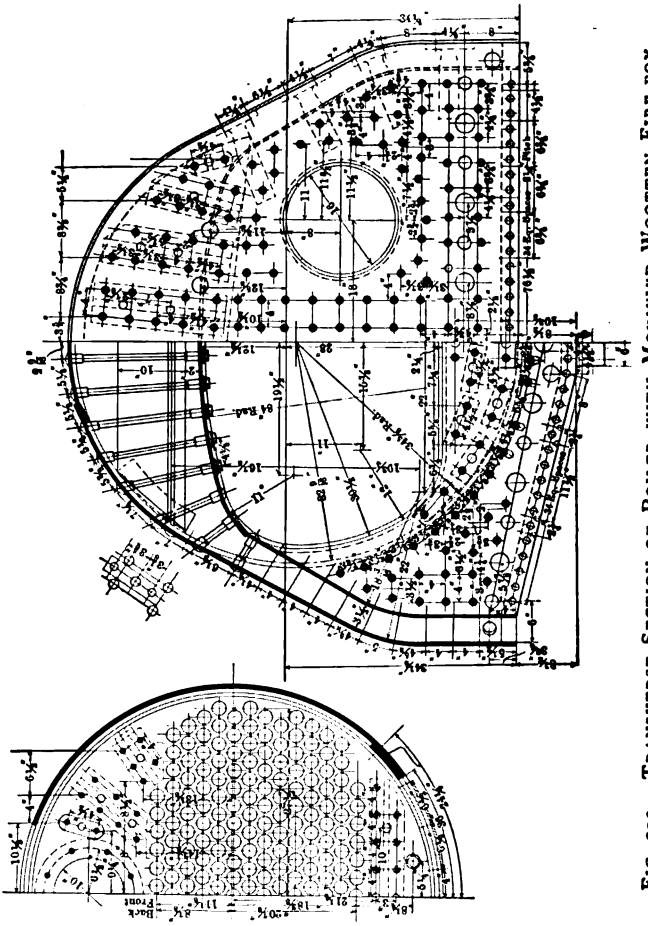

FIG. 292.—TRANSVERSE SECTION OF BOILER WITH MODIFIED WOOTTEN FIRE-BOX.

294 a modern boiler and fire-box are shown. This construction is due to the effort to get increase grate-

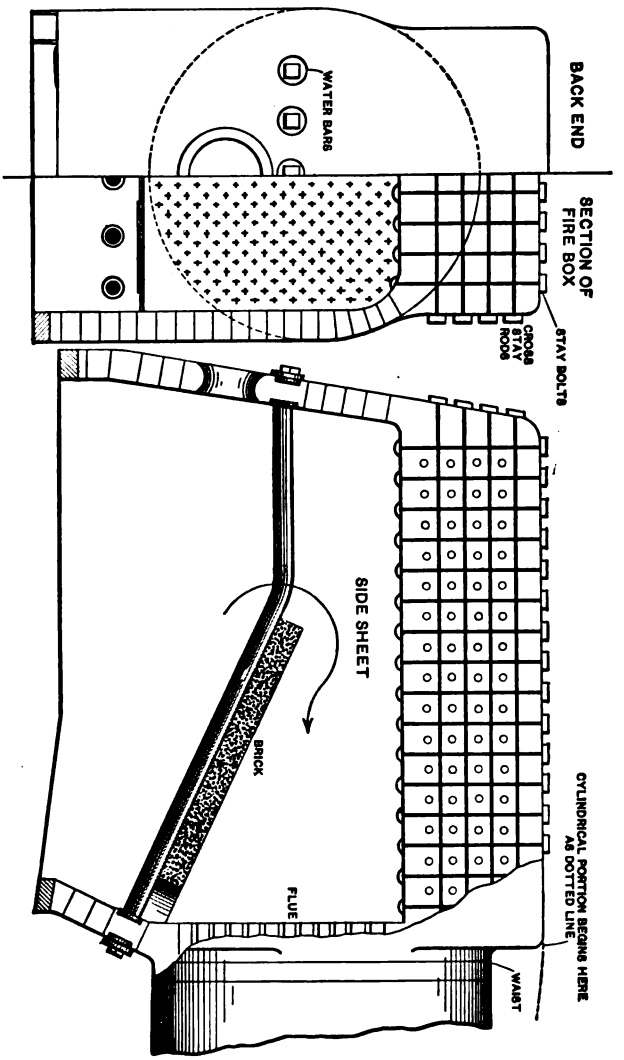

FIGS. 293 AND 294.—BELPAIRE-TYPE WIDE FIRE-BOX.

area; it is similar to the modified Wootten, but is a combination of the Belpaire and wide fire-box. This style of boiler necessitates a trailer-wheel back of drivers to carry part of the weight of engine when using a large driving-wheel; this trailer being of small diameter to clear the bottom of fire-box. The back end of boiler slopes off from the top of boiler to bottom of fire-box; the front end under cylindrical portion also slopes back. The back sheet of fire-box follows the same slope; the forward sheet below the flue-sheet also does the same. The outer sheets around the fire-box are the same as in the Belpaire type, with a flat crown and top sheet, using stays to support crown and side sheets. In some of these boilers the top of boiler runs straight back, while others slope towards back end from a point over the flue-sheet. The usual brick arch and water-tube are used. Various forms are given to the strakes forward of fire-box: a straight strake of large diameter, and then a wagon-top slope with a straight strake of smaller diameter forward to smoke-arch. Also the first course where connected to top sheet over fire-box is even with that sheet and extends forward one course and slopes down to the second course of smaller diameter, as in Fig. 294.

Fig. 295 is a ten-wheeled compound locomotive of the Prairie type, using the Vauclain system of compounding and having a wide fire-box. This fire-box extends over the frame to the fullest width possible, and when used for a passenger locomotive having large driving-wheels it requires that a trail-wheel of small diameter be used to carry a portion of the weight back of the main drivers, as shown in the photograph. This

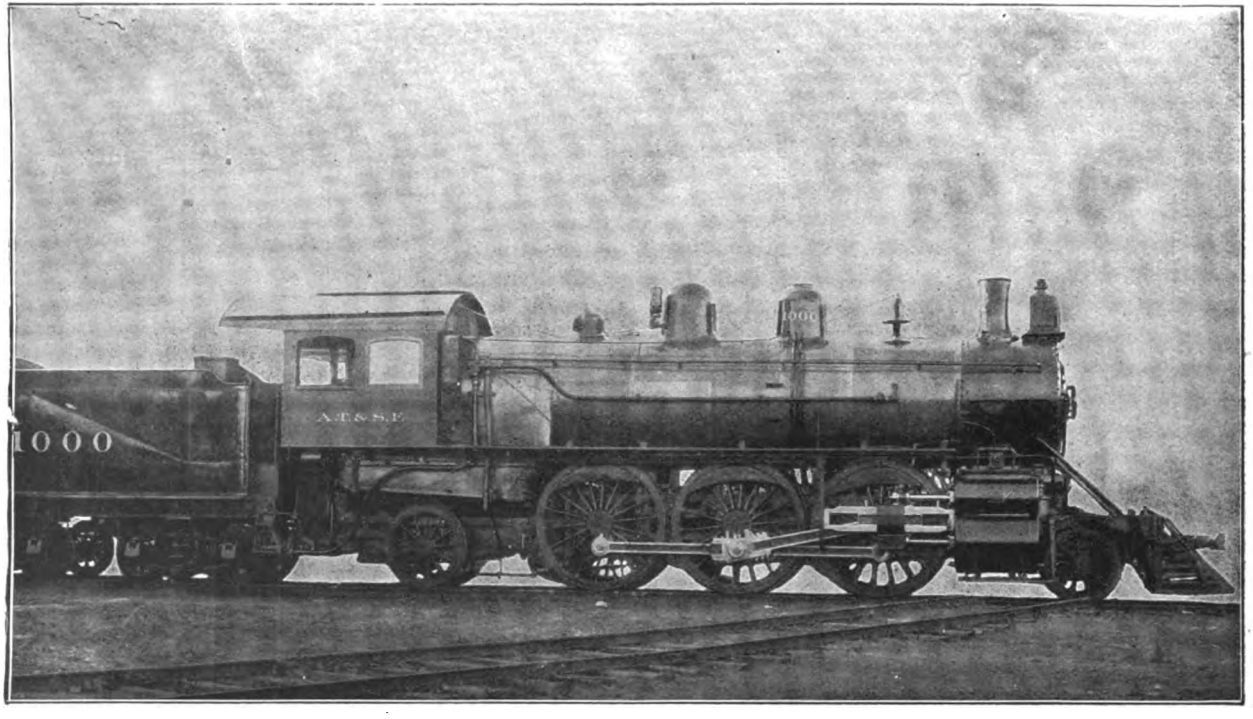

FIG. 295.—FOUR-CYLINDER COMPOUND, VAUCLAIN SYSTEM PRAIRIE TYPE LOCOMOTIVE. BALDWIN LOCOMOTIVE WORKS.

General dimensions: Gauge, 48½″; cylinders, 17 and 28 × 28; drivers, 79″; total wheel-base, 32′ 2″; driving-wheel base, 13′ 8″. Weight, total, about 209,210 pounds; on drivers, about 144,600 pounds. Boiler, diameter, 70″; number of tubes, 318; diameter of tubes, 2¼″; length of tubes, 19′ 0″; fire-box, length, 108″; width, 71½″. Heating-surface, fire-box, 194.6 sq. ft.; tubes, 3543.4 sq. ft.; total, 3738 sq. ft. Tank capacity, 6000 gals.

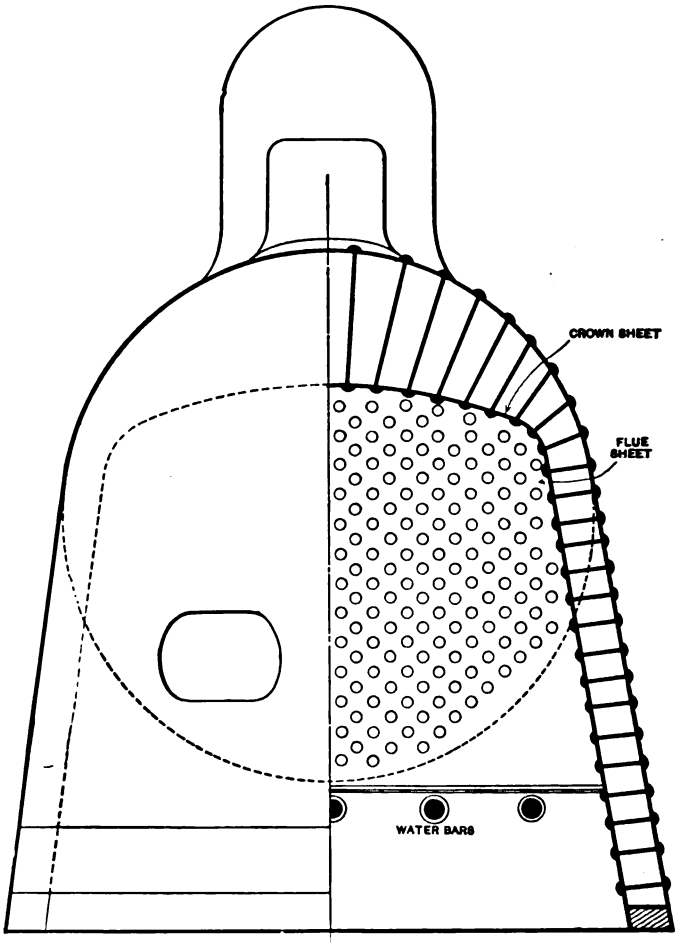

FIG. 296.—BACK END OF PRAIRIE-TYPE BOILER; TWO FIRE-DOORS.

form of boiler has a large diameter. In the engine shown the boiler is straight and very long, the flues in this boiler having a length of 19 feet. The fire-box is wider at the bottom than at the crown-sheet; the crown-sheet having a curve and being stayed with radial stays. Where the side sheets are joined to crown-sheet a large radius is given, preventing sharp corners. This fire-box has two fire-doors, one being shown in cut. Inside length is 108 inches, width 71¼ inches. The boiler diameter is 70 inches. Total heating-surface of flues and fire-box is 3738 square feet. Shaking grates are used in these engines with the usual fire-brick and water-tube. When these fire-boxes are used for freight engines the forward portion has a drop, or the forward end is deeper than the back end; this portion drops down between the drivers (see Fig. 294). The back end of boiler slopes downward; also front leg under the waist. The flue-sheet is straight, while that portion under flues conforms to the slope of outside sheet. The usual cleaning plugs and appurtenances are used with these boilers. Fig. 296 shows clearly the back end and a section across fire-box.

Fig. 300 shows a Vanderbilt boiler as used on several railways. In designing this boiler the idea was to make a true cylindrical fire-box, using no stay-bolts to support it as in the usual construction. This fire-box is a corrugated tube of the Morrison suspension type, the length 11 feet 2¼ inches, diameter 59 inches, with a thickness of ⅜ inch. The length of grate is 7 feet 9 inches to a bridge-wall, which is carried by a half-round iron in one of the grooves. There is a brick arch on top of this. The space in front of this forms

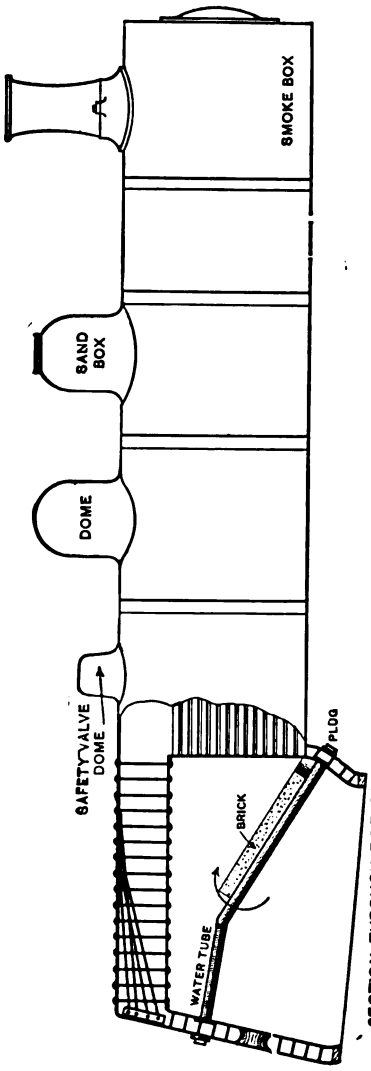

FIG. 297.—PRAIRIE-TYPE BOILER FOR PASSENGER AND FREIGHT ENGINES.

a combustion-chamber and permits the gases to flow into the lower tubes. The back end of this fire-box is brick-lined. The fire-door is in this back end. The front and back tube-sheets are not set vertical but are inclined. In some engines, by so doing, the lower row of flues is made to clear where the cylinder portion of boiler joins the tapering portion or wagon-top. Outlets are provided from the lower portion of fire-box or

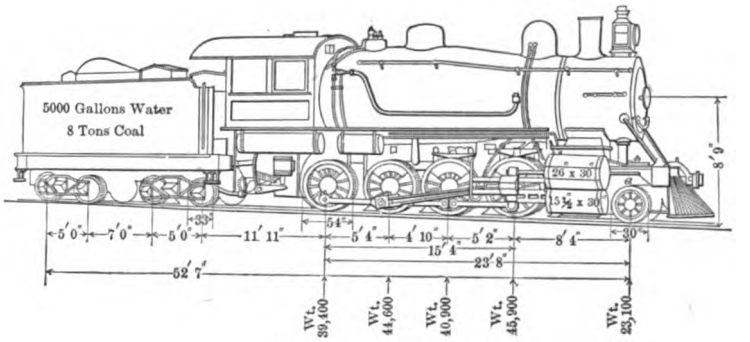

FIG. 298.—GENERAL DIMENSIONS AND WEIGHTS, WITH TANK CAPACITY, OF ENGINE 1940.

that portion forming the ash-chamber; also in combustion-chamber for cleaning out any collection of ashes in that portion: these are closed by manhole-plates. The outlet from ash-chamber has a chute attached to dump the ash. It is evident that this form will make the strongest boiler possible. No stay-bolts are required, and there is little trouble from incrustation and broken stays—a serious item in locomotive maintenance. In a boiler having many stay-bolts the incrustation will collect around the stays and the space between them on the crown-sheet, also where crown-

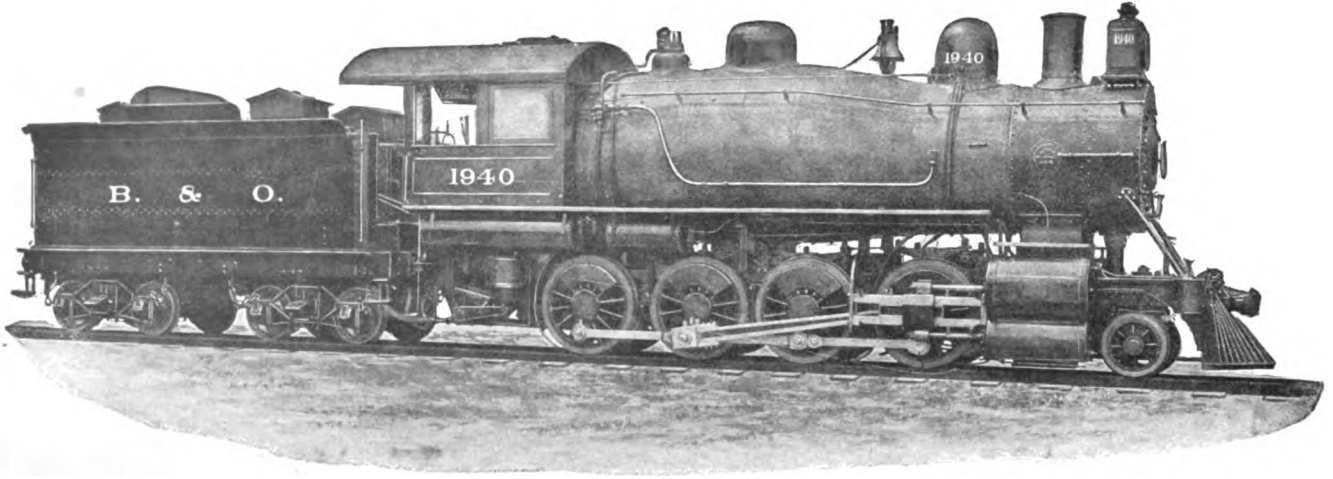

FIG. 299.—CONSOLIDATION LOCOMOTIVE WITH VANDERBILT BOILER, BUILT BY THE BALDWIN LOCOMOTIVE WORKS FOR THE BALTIMORE AND OHIO RAILROAD.

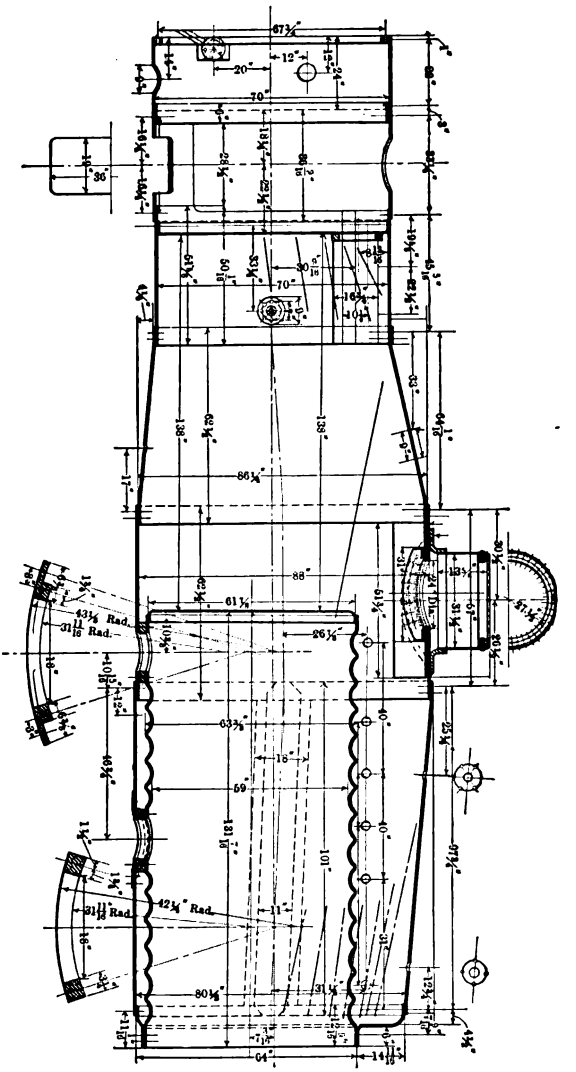

FIG. 300.—BOILER OF LOCOMOTIVE FOR THE BALTIMORE AND OHIO RAILROAD, BUILT BY THE BALDWIN LOCOMOTIVE WORKS.

bars are used. The boiler illustrated should be free from this action, as not only is free circulation of water insured, but there are no projections to which the sediment can adhere. The general dimensions of boiler and fire-box in Fig. 299 are shown in Fig. 300. Fig. 301 is a transverse section showing plan of fire-box, flue-sheet, and outside sheet or boiler-shell. These boilers carry an unusual number of tubes; in this case there are 500 $1\frac{3}{4}$-inch tubes 11 feet 6 inches long. The heating-surface is 2615 square feet; this with 135 square feet of fire-box surface gives a total of 2750 square feet. The engine is a four-cylinder compound, Vauclain system, for the B. & O. R. R. Diameter of driving-wheels, 54 inches; cylinders, $15\frac{1}{2} \times 30 \times 26$; weight on drivers, 170,800 pounds; on truck, 23,100 pounds; total, 193,900 pounds; total wheel-base, 23 feet 8 inches, 15 feet 4 inches of which is rigid.

The principle of the Morrison suspension-tube, as used in the Vanderbilt, is best explained as follows: It embodies a most valuable application of the catenary curve and differs entirely in principle from other forms of corrugated fire-boxes. One must imagine a flue made of some material such as canvas or sail-cloth, comparatively strong in tension but having no stiffness whatever. At equal distances along this flue or tube of canvas suppose a series of hoops, and conceive the whole thing subject to external pressure in a closed chamber. The canvas sags or bulges between the hoops inwardly in the same curve as that assumed by a chain suspended between two supports of equal height, and no excess of pressure can change its form until the fabric tears or gives way under the tensile

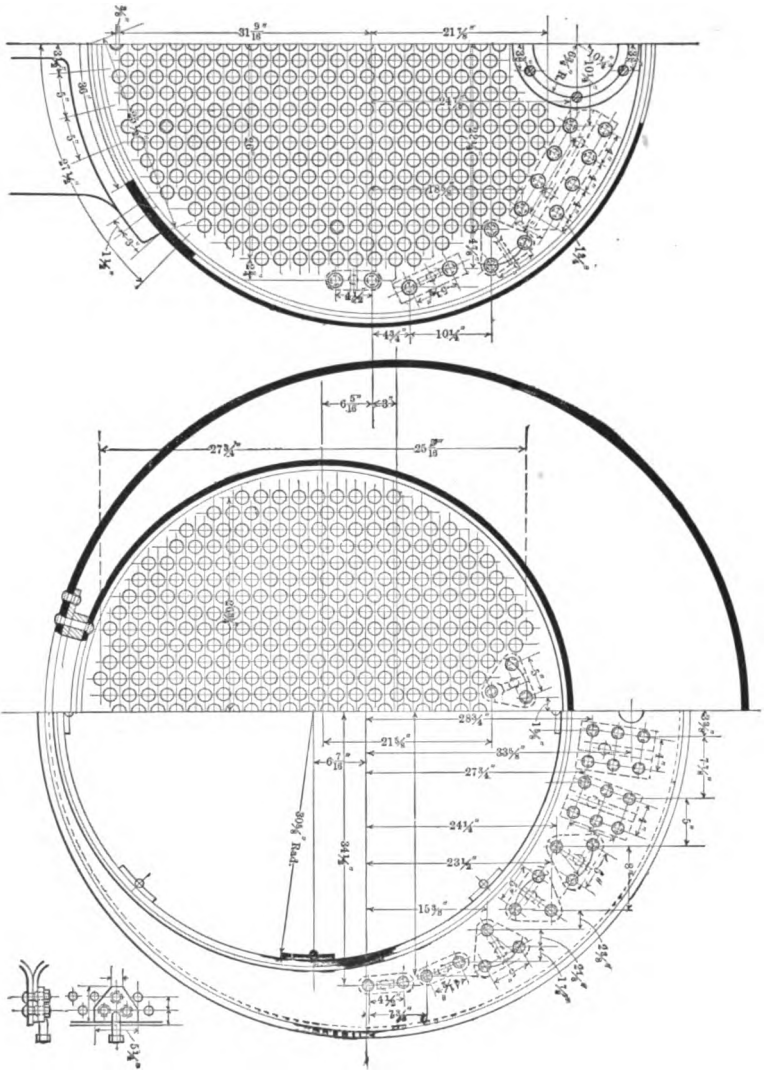

FIG. 301.—TRANSVERSE SECTION OF BOILER FOR BALTIMORE AND OHIO LOCOMOTIVE.

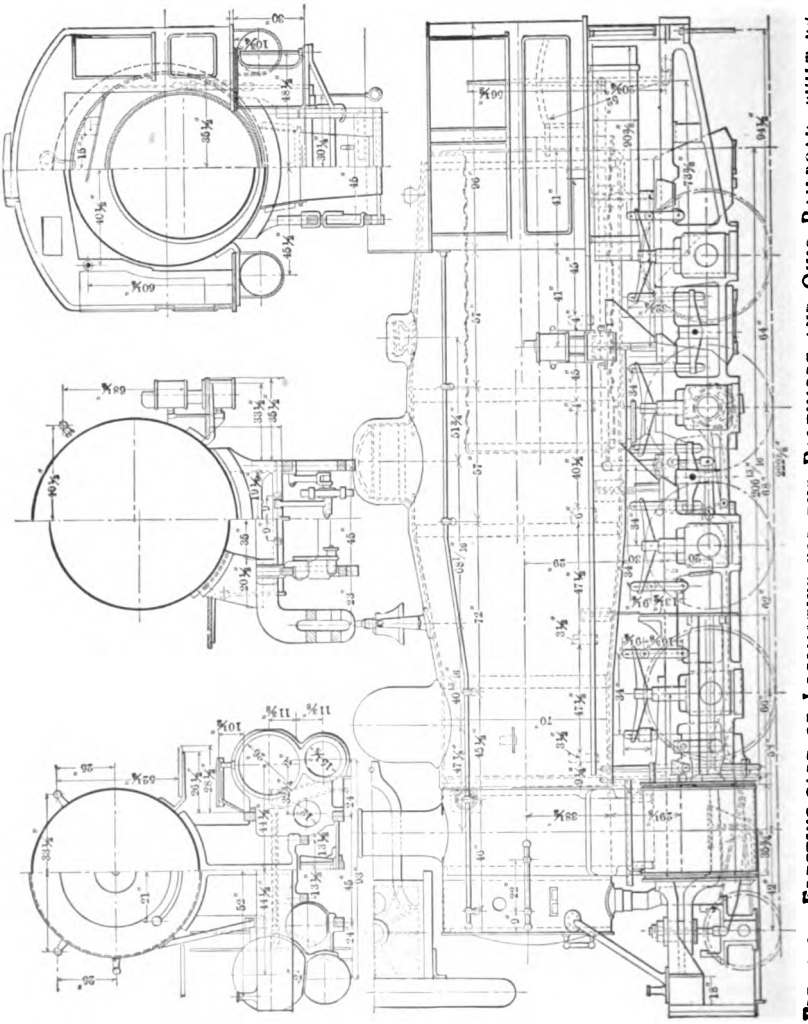

FIG. 302.—ERECTING-CARD OF LOCOMOTIVE FOR THE BALTIMORE AND OHIO RAILROAD, BUILT BY THE BALDWIN LOCOMOTIVE WORKS.

stress. There is no crushing or collapsing, even with this material, as long as the hoops which form the series of circular arches are strong enough to resist the compressive stress to which they are alone subjected. Carry this principle out in steel, making the narrow corrugated ribs deep enough to withstand the pressure, and you have the Morrison suspension furnace. It forms the natural converse of the cylindrical boiler-shell, and is as well adapted to withstand collapse as the latter is to stand bursting pressure (see Fig. 300 for corrugations). The point where the grooves join represents the hoops, while the hollows represent the canvas. The pressure is equal in all directions around this fire-box.

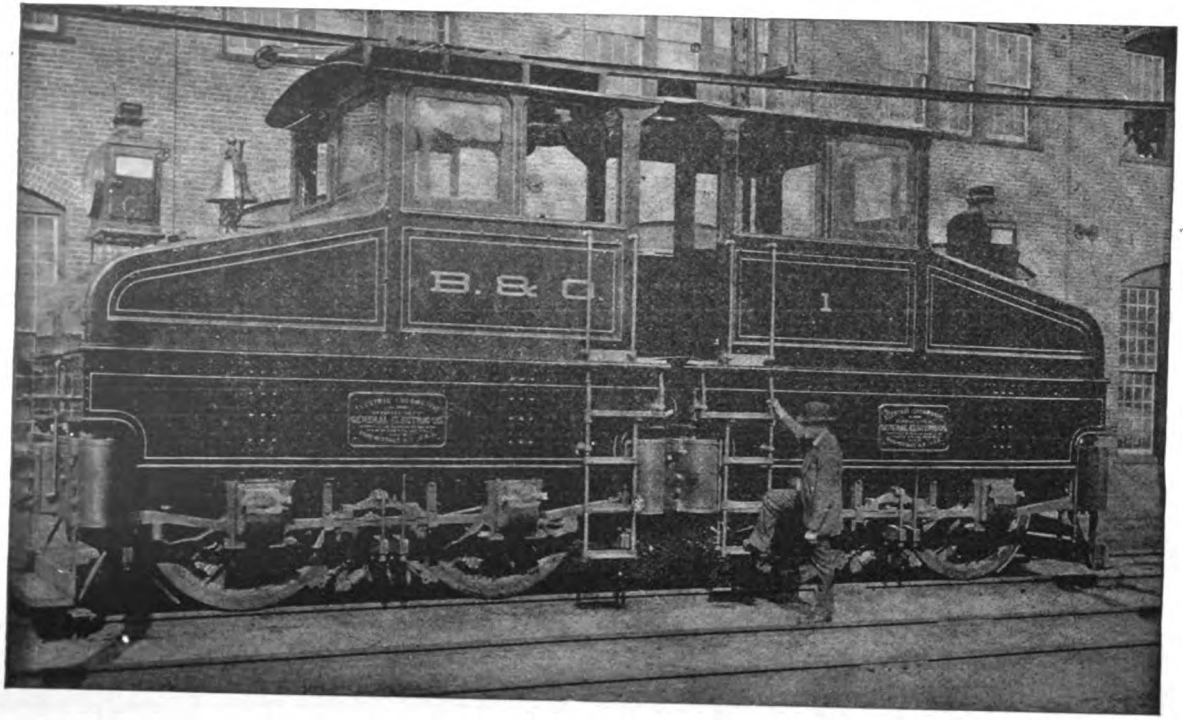

FIG. 303.—THE 96-TON ELECTRIC LOCOMOTIVE.

Weight on 8 driving-wheels, 192,000 lbs.
Diameter of drivers. 62".
Draw-bar pull, 42,000 lbs.
Height to top of cab, 14' 3".
Starting draw-bar pull, 60,000 lbs
Length over all, 35'.

CHAPTER XXII.

GENERATING CURRENT FOR THE ELECTRIC LOCOMOTIVE.

As there are several ways of generating an electric current, it was thought proper to give a brief explanation of the manner of generating current for the electric locomotive. The current generated for this purpose is produced by machines called in railroad work generators or dynamos, which are of large size and capacity, directly coupled to a slow-speed engine. Fig. 194 shows a vertical compound engine driving a 1500 k.w. generator. The principle of a generator is this: As shown, a circular yoke has projecting inwardly several poles or fields thus multipolar; these poles are wound with wire. In the centre of these fields is an armature which is caused to revolve by the engine. On this armature is wound a lot of copper wire or bars insulated. The ends of the wire are connected to the commutator in the proper manner. Bearing against the commutator are brushes for taking off the current. There are as many brushes as circuits through the armature when so desired. Now, if the engine is started, the armature revolves, generating a current, due to the fact that the wires on the armature are within a magnetic field

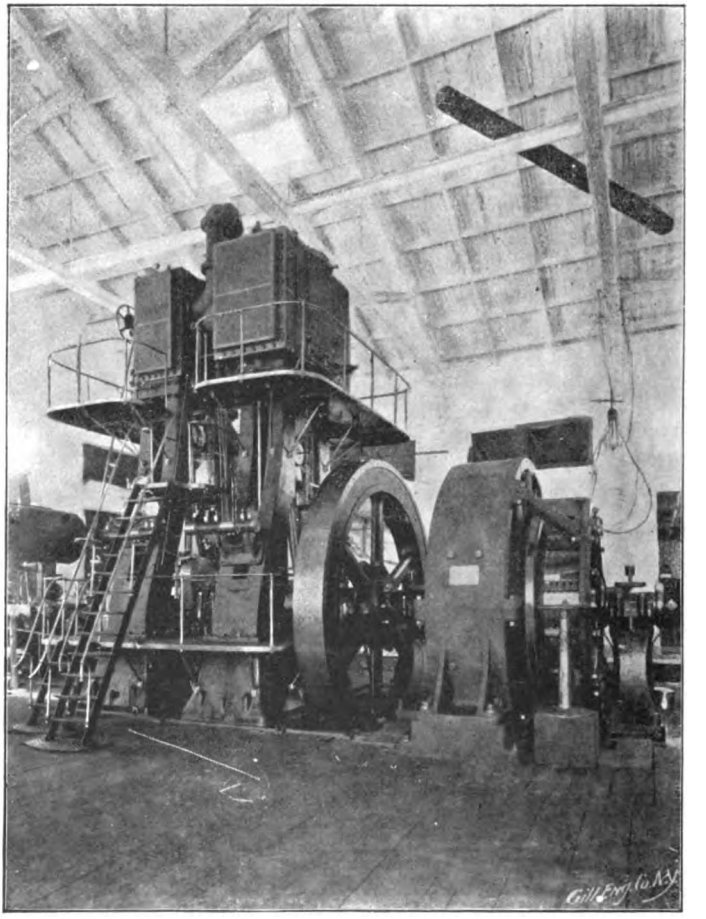

FIG. 304.—GENERAL ELECTRIC CO.'S DIRECT CONNECTED RAILROAD GENERATOR (MULTIPOLAR TYPE) DRIVEN BY A VERTICAL COMPOUND CONDENSING ENGINE.

and are cutting lines of force or magnetic flux, which are generated in the poles by a part or whole of current passing through the field winding from the armature, the original lines of force being the residual magnetism in the poles. Thus the current generated is proportional to the voltage and resistance, and the voltage or pressure of the current to the speed, number of inductors or wire on the armature, and number of lines of force cut by these wires on the armature. The current thus generated is passed to a switch-board, and from there to the proper feeder-wires over the line to the electric locomotive. For further information regarding generators the reader is referred to books on that subject.

ELECTRIC LOCOMOTIVES.

As the electric locomotive has developed into practical use, and has been tested under heavy loads and high speed, it is thought that a clear and simple explanation would be a benefit to those handling our steam locomotives.

The first subject will be to show the principle of an electro-magnet, or a magnet produced by a current of electricity. Get a piece of soft iron, round or square, preferably round, as in Fig. 305, and wind a coil of insulated copper wire around it in the manner shown; then connect the two ends to the poles of a primary battery. A current of electricity will flow through this coil of wire surrounding the soft-iron core. What is the effect? Let us see. Before there was any cur-

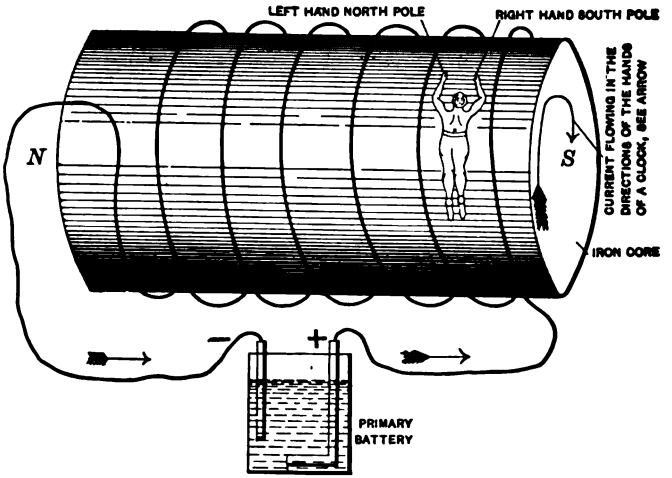

FIG. 305.—ELECTRO-MAGNET CURRENT PASSING FROM RIGHT TO LEFT.

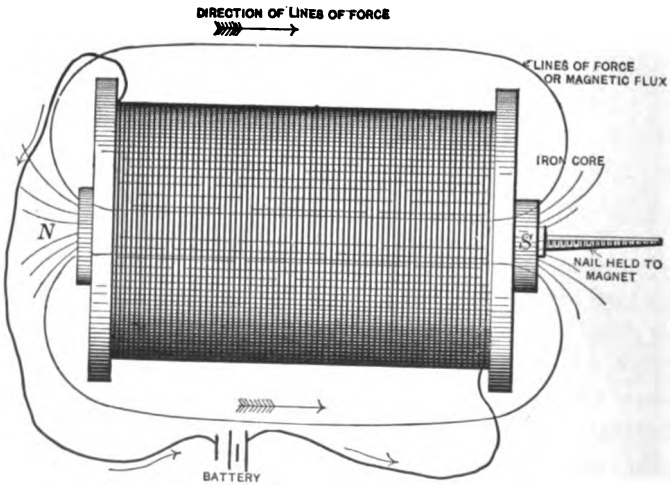

FIG. 306.—COMPLETE ELECTRO-MAGNET ENERGIZED.

rent passing through the wire, if we should hold a nail or iron filing to the end of the soft-iron core, we would see no effect whatever. But since the current is flowing we find that our nail would be drawn or attracted to the iron core. In Fig 306 it shows the core completely covered with wire. It is seen that the current flowing around the iron core causes lines of force to pass through the iron. These lines of force or magnetism cause the nail to be drawn to the iron. Fig. 311 shows the lines of force as they pass through the iron from one pole to the other. The best way to see the lines of force actually is to get a small horseshoe magnet and a piece of glass, distribute some iron filings over the glass, put the magnet directly under them, and they will arrange themselves in the direction of the lines of force.

It will be found that there is a difference in the polarity of the two ends of the soft-iron core. One is a north pole, while the other is a south pole. (See Fig. 306.) There are two conditions which govern this: the direction in which the wire is wound around the iron core, and the direction in which the current is passed through the coil of wire surrounding the core. In Fig. 305 the wire is wound in a right hand-spiral, or in the direction of a right-hand screw. In Fig. 305 we see that the current is entering the coil at the right-hand end, and is passing over the iron core, or as in the direction in which the man is swimming. It is a good plan to bear in mind that if the man is swimming with the current in the direction as shown in Fig. 305 the south pole of the magnet will be on his right hand

and the north pole on his left hand.* To change the polarity by passing the current in the opposite direction, Fig. 307, we see that the man is turned around, and his right hand points to the south pole and his left to the north pole, or the polarity is the reverse of the first case (Fig. 305). Now, if the wire is wound as a

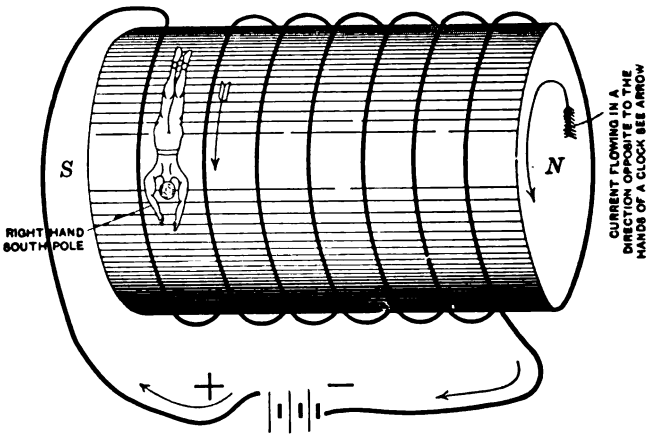

FIG. 307.—RESULT OF PASSING THE CURRENT THROUGH THE COIL FROM LEFT TO RIGHT.

left-hand spiral (Fig 308), and the current entered from the right-hand end, we see that the polarity is opposite to that of the right-handed spiral. Remember to produce opposite poles the current must pass around the spools in reverse directions in a horseshoe magnet (Fig. 309). The magnet just explained is a bar type, and the lines of force must pass from the north to the south pole through the air (Fig. 306), which forms a great

* This will apply no matter in which direction the current is flowing.

resistance to them. The closer the poles are to each other the less the magnetic leakage, and the shorter the distance the lines have to pass from one pole to the other less is the resistance to their flow.

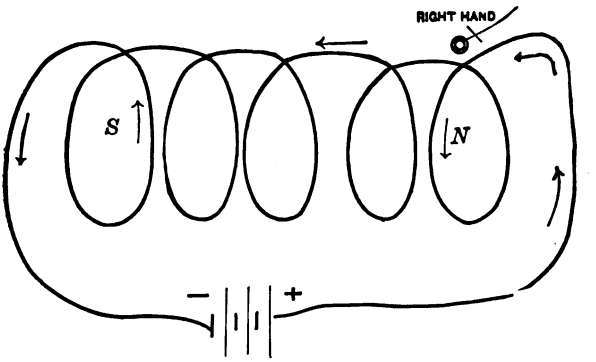

FIG. 308.—A LEFT-HAND SPIRAL CURRENT ENTERING FROM RIGHT-HAND SIDE. POLARITY OPPOSITE TO THAT OF FIG. 305.

Then the most desirable form of magnet generally used is the hoseshoe magnet (Fig 309); the two poles are bent around near to each other, thus shortening the distance which lines of force have to travel. If two magnets whose poles are of the same polarity are held close together, they will repel each other, and the lines of force or magnetic flux will be diverted as shown in Fig. 310, and produce consequent poles, as *NN*, *SS*. This is made use of in motors and dynamos.

But if the two magnets are brought close together with opposite poles, or *N* and *S*, the magnets will be drawn together or attracted, the attraction becoming stronger as the poles approach each other. The law is, similar poles repel, and dissimilar attract. As the action of an electric magnet and what causes it to

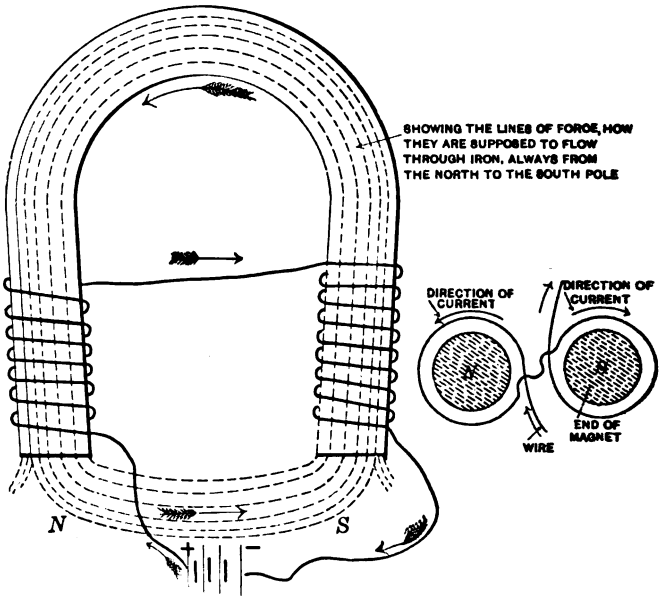

FIG. 309.—HORSESHOE ELECTRO-MAGNET.

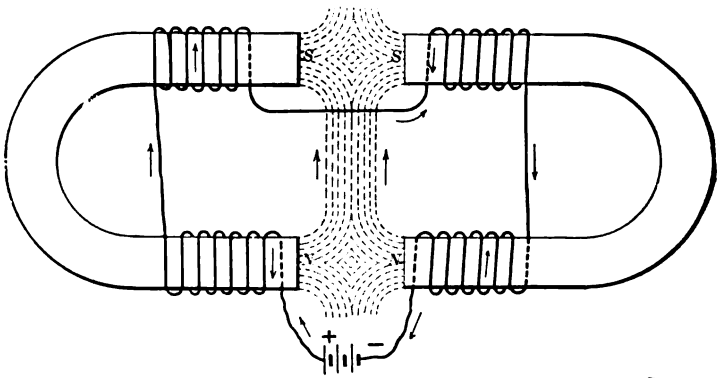

FIG. 310 —FORMING CONSEQUENT POLES. MAGNETS WITH SIMILAR POLES OPPOSITE EACH OTHER.

be a magnet has been explained to the reader, the fundamental principle of an electric motor or locomotive will be understood. Fig. 311 shows the lines of

FIG. 311.—SHOWING LINES OF FORCE AS TAKEN FROM A PHOTOGRAPH.

force as produced by iron filing on glass held under a horseshoe magnet.

THE ELECTRIC MOTOR FIELDS.

The electric motor is composed of two parts in simplest form, one stationary and the other revolvable. The stationary portion is called field magnets, and on them is wound the wire which carries the current to produce the necessary poles, taking the present form as shown in Fig. 312, which is of the horseshoe type.*

* And sometimes called the under type.

The fields are not in one piece, but are composed of the field-pieces, the yoke, which is bolted on to each field-

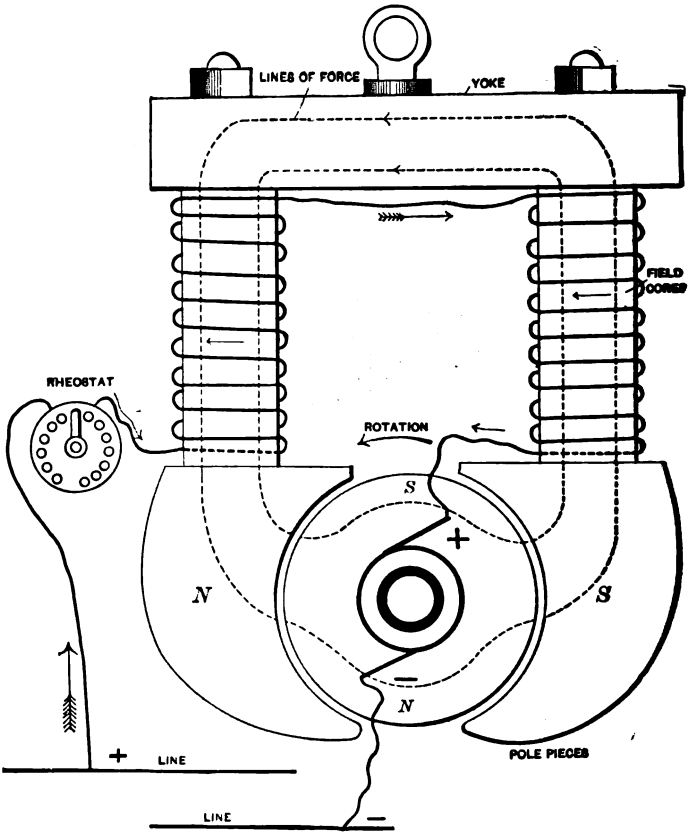

FIG. 312.—ELECTRIC MOTOR, FIELDS SERIES-WOUND.

piece, and at the bottom are the pole-pieces *N* and *S*. The field-pieces should be of the softest iron and of ample size to carry the magnetic flux. They are gen-

erally made of wrought iron and of soft steel, and in a great many motors the pole-pieces are laminated to prevent Foucault or eddy currents. These are currents induced in the solid pole-pieces, and flow across the axis of the pole as shown in Fig. 313, and produce heating. Laminating prevents this cross-flow, as shown. The field-winding is wound on spools, and

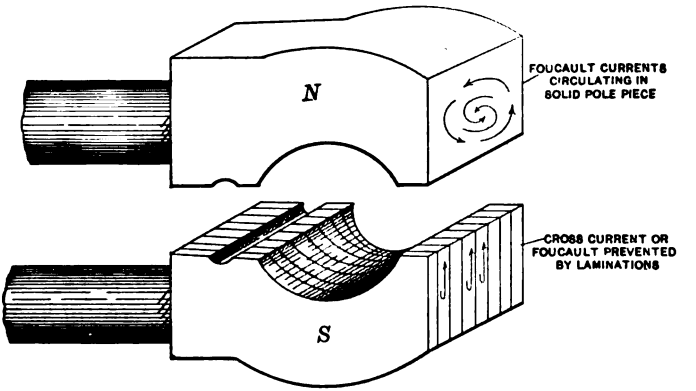

FIG. 313.—ONE POLE LAMINATED, THE OTHER SOLID (SHOWING THE EFFECT OF FOUCAULT CURRENT).

then the yoke is taken off and the spools are slipped on the field-pieces. There should be as few joints as possible in the fields, and they should be as short as the winding will permit, so as to produce as short a magnet circuit as possible. Iron-clad field-magnets are the best. The motor fields may be of many different forms. Figs. 314 and 315 show a multipolar type of motor; in these there are four pole-pieces projecting inwardly from the yoke, which is circular in form and in two halves bolted in the centre. Any number of poles could be used if desired. The

magnetic paths are plainly shown by Figs. 312 and 314; also the manner of winding and the flow of the current. Each field-coil is wound in the reverse direction, thus producing north and south poles. Another form

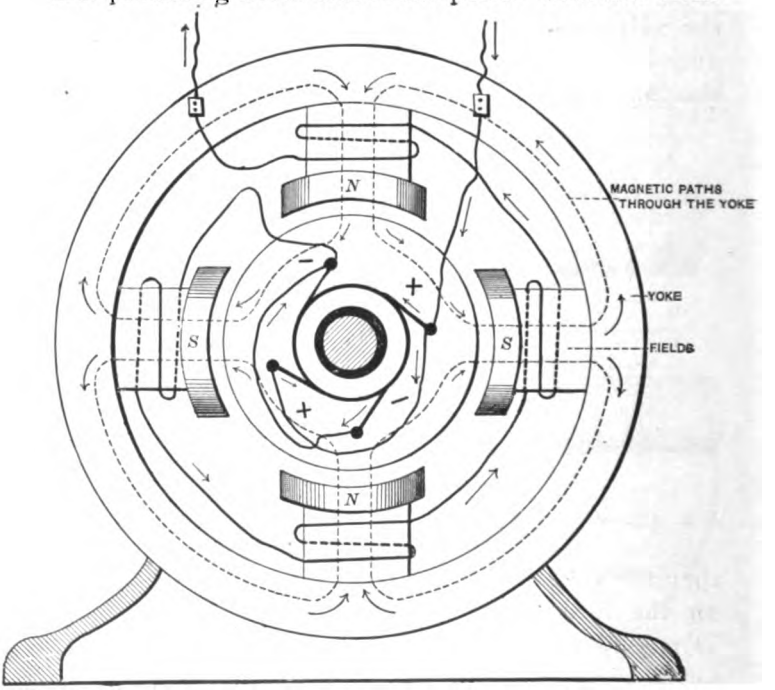

FIG. 314.—MULTIPOLAR FIELD-MAGNET, SERIES-WOUND MOTOR.

of field is that which produces consequent poles, as in Figs. 316 and 317. This is the same as a double horse-shoe magnet, the pole-pieces being in the centre, and the field so wound as to produce north and south poles together, this causing the lines of force to be diverted, as shown in Fig. 310.

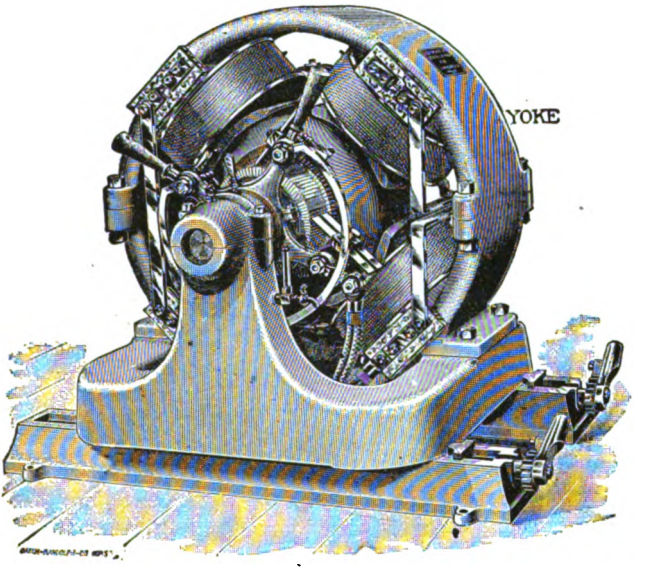

FIG. 315.—MULTIPOLAR MOTORS, 4 CIRCUIT, 4 BRUSHES.

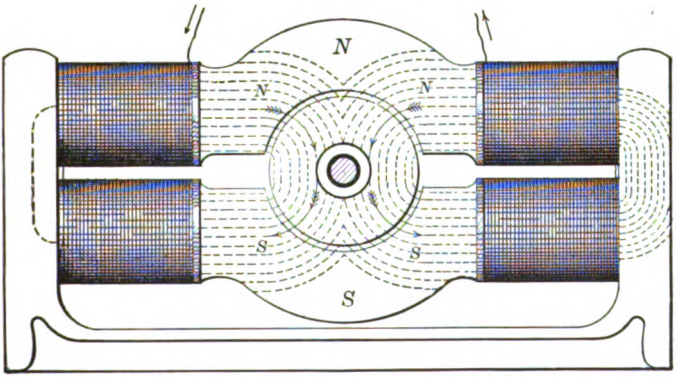

FIG. 316.—CONSEQUENT-POLE MOTOR FIELD, 2 CIRCUIT.

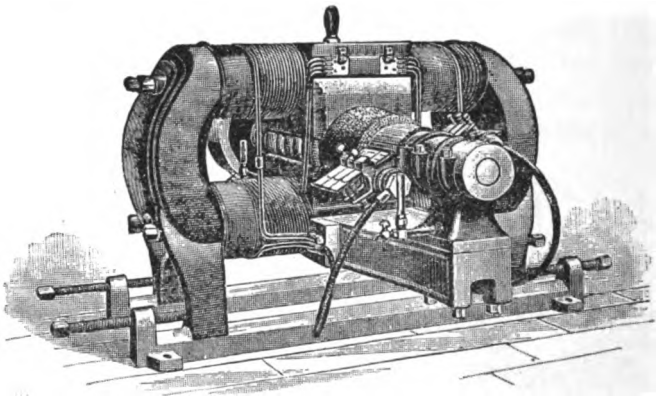

FIG. 317.—CONSEQUENT-POLE MOTOR.

MOTOR FIELD-MAGNET WINDING.

There are several ways in which the fields are wound, and accordingly different results are obtained from the motor. In most electric motors used for street-railroad service the fields are series-wound. But on larger motors for electric locomotives some are compound-wound, that system being best adapted for the service. Fig. 312 shows the field-winding and connection to the mains or feeder. The connections are very simple. The rheostat, field-coils, and armature are all in series; the course of the current is shown by the arrows. In this winding it will be seen there is only one continuous coil of wire that is wound on the spools to excite the fields. Series-wound motors are run on a constant potential or constant current circuit. When run or a constant potential circuit, the strength of the motor varies with the current, and does not tend to run

at a constant speed like a shunt-wound motor. The best work to which they are adapted is railway work, where there is no danger of the load suddenly being taken off, and where variable speed is desired, as railroad motors are subject to these changes. They are also an advantage on circuits where the potential is subject to sudden drops, as on the end of a long line.

SHUNT-WINDING.

In shunt-wound motors the field-coils are not in series with the armature as in the series-wound motor. The field-winding is of very fine wire of high resistance, and it takes but a small amount of current to excite the field-magnets. Fig. 318 shows the manner of connecting the field-coils. As is shown, one end of the coils is connected to the positive (+) brush of armature, and the other end to the negative (—) brush. In this the whole current supplied to the motor does not flow through the field-winding—only a portion, as shown by the arrows; thus the name of shunt-wound. The current in this case has two paths from the positive brush (+) to the negative (—). Shunt-wound motors are not used to any great extent on railways. There are some features against them in this capacity; for instance, on the ends of long lines where the fall of potential or presure might be great the motor would be converted into a dynamo for an instant.

From the fact that the counter-electro-motive force would be greater than the E. M. F. being supplied, also in using shunt-wound motors on street railways, if from any cause, such as dirt, stones, sticks, or anything that would raise the wheels clear of the rail, so as to

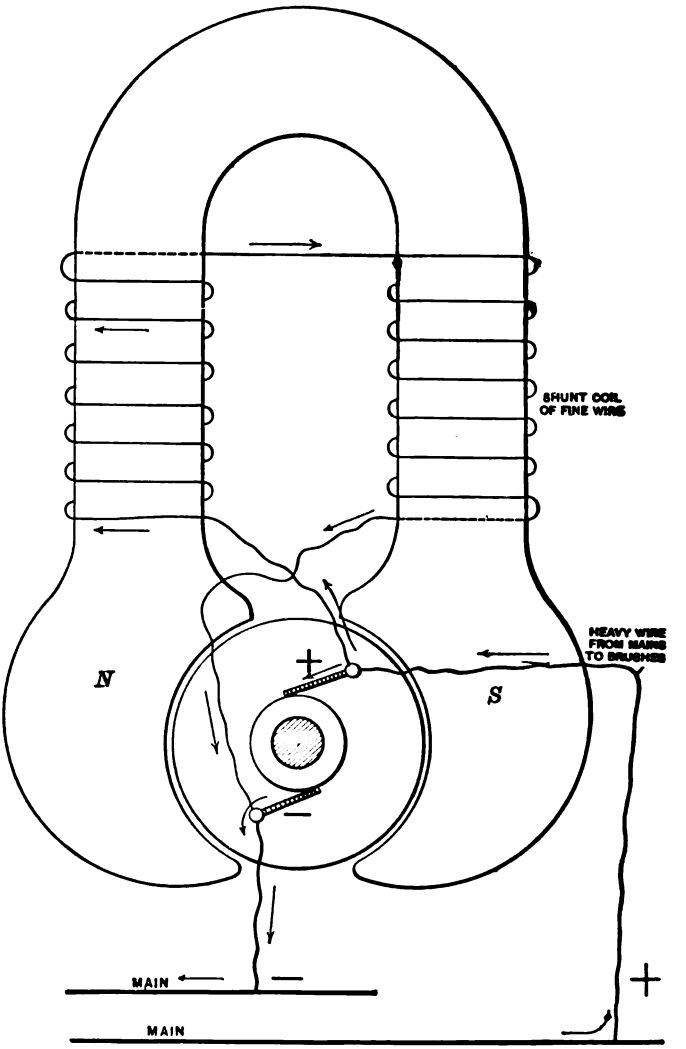

FIG. 318.—SHUNT-WOUND MOTOR FIELDS AND CONNECTIONS TO ARMATURE.

break the circuit, would cause the motor to fail to start, due to the fact that the current would leave the shunt-winding, which is of high resistance, when the

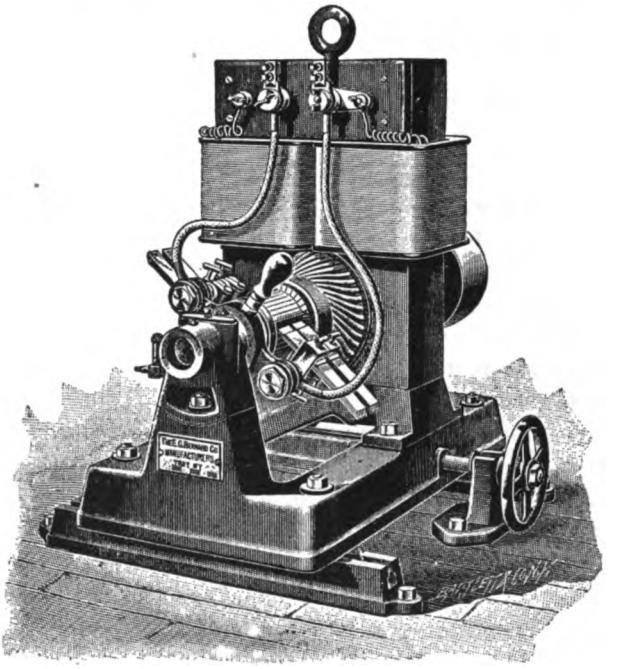

FIG. 319.—TWO-POLE SHUNT-WOUND MOTOR.

current returned it would rush through the armature-winding, which is of less resistance, and not build up the field-magnetism. This rush of current is detrimental. On stationary motors shunt-wound it is policy to raise one brush from the commutator, so as to cause the current to pass through the field-winding or

shunt. One good feature of a shunt-wound motor is that it is nearly self-regulating on constant potential circuit and run at constant speed whatever the load, and at lower E. M. F. the regulations are the same, only the speed is less. Fig. 319 shows a full view of a shunt-wound motor having square fields. The shunt to the field is clearly shown.

COMPOUND-WOUND MOTORS.

In this form of winding there are two sets of coils around the fields, as shown in Fig. 320: a shunt-coil of fine wire of many turns, and the series coil, which is the wire leading the current from the main circuit to the armature.

Now in this type all the current passes through the series winding, which is generally of a small number of turns, and at the same time that amount of current passing through the shunt also passes around the fields. But that current in series coil passes to the positive brush (+) of armature, while that of the shunt passes from the positive to the negative brush without passing through the armature. This method of winding is a combination of series and shunt. This form of winding has this advantage over the simple shunt winding: if the circuit should be broken at any time, the fields would be magnetized on the circuit being again closed, because the current would pass through the series winding around the fields. Then the counter E. M. F. would have a tendency to force a part of the current through the shunt-coil, thus building up the fields and producing the proper counter E. M. F. speed and torque.

ARMATURES.

Next after the fields comes the armature; it is this part of the motor which produces the motion and is

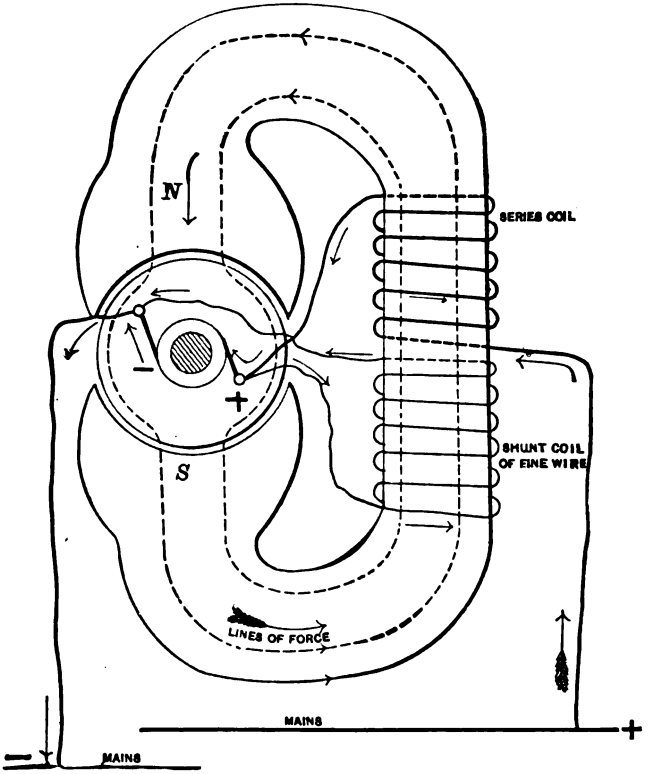

FIG. 320.—COMPOUND-WOUND MOTOR FIELDS AND CONNECTIONS TO ARMATURE.

the movable portion of the motor. There are two styles which will be explained: first, the ring type; second, the drum type. The easiest type to explain to the reader is the ring armature. The general con-

struction is as follows (see Fig. 321): On a shaft is keyed a spider of non-magnetic material, as brass; on

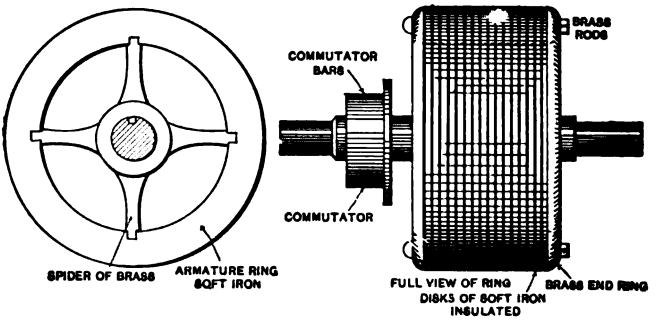

FIG. 321.—ARMATURE-CORE, RING TYPE.—FIG. 322.

this spider is mounted the armature. This ring is not made of one solid piece, but of a great number of flat disks with the centres punched out; the iron used is to be of the softest. In assembling the disks to form the ring, between each disk is placed a sheet of paper or other insulating material, thus separating the disks. In order to hold these in one solid ring, bolts of brass pass longitudinally through the ring, and the nuts drawn up tight, generally having end-plates of brass as shown in Fig. 322. The idea of placing insulating material between each disk is to prevent Foucault currents in the armature-core or ring. These currents are shown in Fig. 313. In using a solid core these currents induced in the iron and generally parallel to the axis of core, produce heat, and reduce efficiency of the motor; by using the laminated core these defects are mostly prevented, because the insulation between each disk prevents the currents from flowing as described. The same method is used in the

construction of a drum armature. The next thing to do is to thoroughly cover this iron armature with an insulating material, so as to prevent the winding coming in contact with the iron of the core. A good duck cloth is usually used and is wrapped around the ring when it is a plain ring. This cloth is well saturated with a good shellac varnish. Some cover first with thick paper shellacked, then put the cloth on. Others use cloth and adhesive rubber tape. After the shellac is dry the winding is next, it being ascertained that the core is thoroughly insulated. Where a motor is to do heavy work, the shaft should be of best steel and short as possible to prevent its springing, as this, if excessive, would allow the armature to strike the pole-faces and injure the insulation, causing a short circuit.

ARMATURE-WINDING.

There are two methods of winding an armature—ring winding and drum winding. The method shown in Fig. 323 is what is called closed-circuit winding, and is in the form of a right-hand spiral. The winding covers the entire ring in the actual armature and is generally called a Gramme ring. But in most forms the ring is toothed or slotted across its length and the wire is wound in the slots. This fulfils two purposes: one is that it mechanically strengthens the armature-winding by forming a bearing for the wire to resist the pull due to fixed poles;* another point is that it produces what is called an iron clad armature, which increases the efficiency of the armature and reduces the

* It is to be understood that a wire having an electric current passing around it, and in front of a magnetic pole, is subject to a torque or pull.

clearance between the pole-faces and the armature. Wires are iron-clad, due to their being imbedded in the grooves. The wire can be wound around the ring in one continuous coil if desired, and is done by some manufacturers, but is generally wound in separate coils. As shown by Fig. 323, at equal distances around the

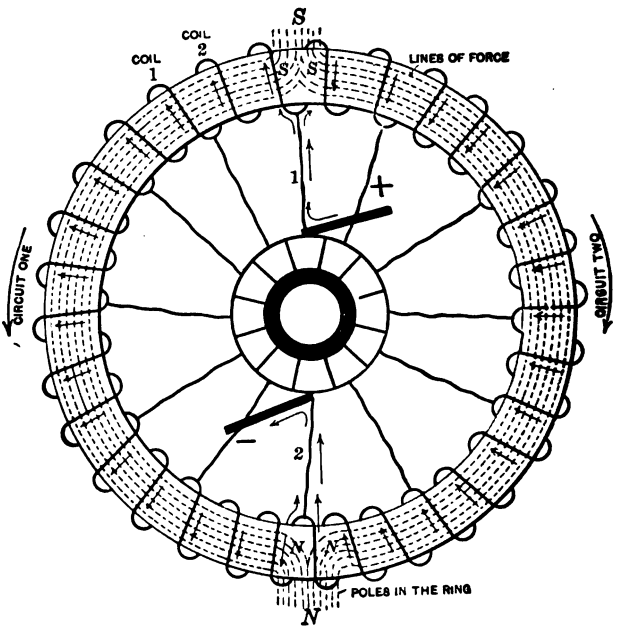

FIG. 323.—RING ARMATURE. CLOSED-CIRCUIT WINDING, TWO CIRCUITS AROUND THE RING FORMING CONSEQUENT POLES *S* AND *N*.

ring are short leads of wire connected to the winding on the ring and to the commutator.

This commutator is composed of bars of copper insulated from each other and from the shaft. As shown, there are two coils connected to one commuta-

tor-bar. When the armature is wound in coils, the end of one coil and the beginning of the other coil must be connected to one commutator-bar same as Fig. 323. This also forms a two-circuit winding. This is the most simple form of winding and the easiest to be understood. There are many different forms of ring winding in dynamo and motor construction. By looking at Fig. 323 the course of the current through the winding is shown by the arrows. The positive brush (+) is on the top of commutator and touching a bar. The current passes into the lead 1 or wire to the winding on the ring; here it divides, part passing around the ring to the right and part to the left. That portion which passes to the right passes under the ring; the portion to left passes over the ring. The divided current then emerges into lead 2 at the bottom of the ring and unites, passing into the negative brush and then to main back to dynamo.

It was explained on a former page that when a current of electricity was passed around a piece of iron it formed an electro-magnet. The armature-ring being iron, what must be the result in Fig. 323? The result is that the ring is a consequent-pole magnet, and the pole at the top is a south pole, and that at the bottom a north pole. These poles are the result of two N. and two S. poles, because the current had two paths around the ring, forming on each half of the ring a north and a south pole. The result is that the poles repel each other, as shown in Figs. 310 and 323, which show the lines of force passing from pole to pole. It is now that the reader should remember that poles of dissimilar kind attract, like poles repel; also that the armature-ring is now a magnet having two poles.

OPERATION.

The construction of the motor fields and armature has been fully explained. The next step is to assemble the parts into the complete motor. Fig. 324 shows a

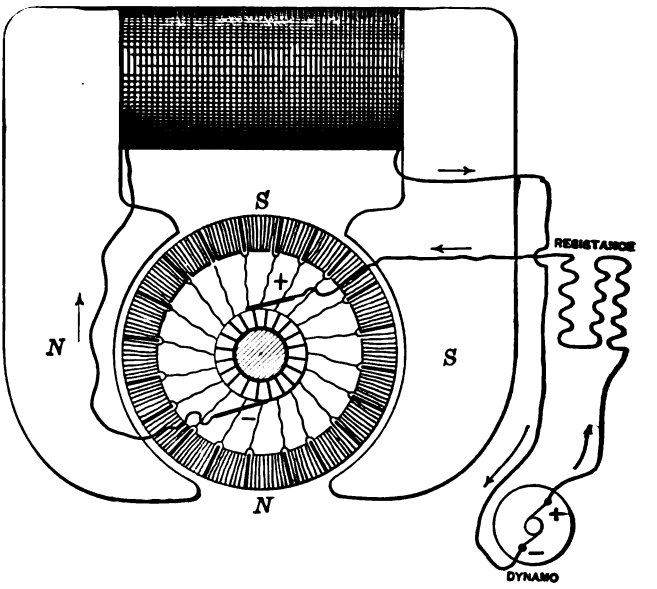

FIG. 324.—SERIES-WOUND MOTOR.

Rotation from right to left. The south pole in armature being drawn to the north pole of field, north pole of ring to south pole of field. The poles at right angles to each other, brushes bearing on separate commutator-bars and at opposite diameters. The poles being formed in the ring at the point where the leads from commutator-bars connect to the two coils.

diagrammic view; the arrows show the course of the current through the armature and fields, this being a series motor field and armature in series. The current from the main or feeder passes into the positive brush (+)

and then into the ring winding, dividing, passing around both sides of the ring and out to the negative brush (—). As was explained on page 592, this forms two poles in the iron core of the ring, N. and S. poles. After the current leaves the armature-winding it passes to the field-coil on the left, forming a north pole as shown, then passes around to the field-coil on the right, forming a south pole; from there it passes to the ground or rail in most street-car motors or locomotives. This puts the field-winding on the ground side, but in most stationary motors the current passes through the field-coils first (see Fig. 312) and then to the armature; this also applies to motors on cars, as in this case the field-coils will form a resistance to the flow of current. When the lightning strikes the line from overhead, in the other the fields form a resistance between the earth and the armature. There are two sets of magnets: one set in the ring of armature, the other the field-poles on each side of the ring. These poles are at right angles to each other in Fig. 324; rotation of the armature will be from right to left. Why? Because the north pole of the field-magnet is attracting the south pole of the armature-ring, and the north pole of the ring is being drawn to the south pole of the field-magnet on the right. It is seen now why it is well to understand the electro-magnet. It may be thought that when the poles get opposite to each other they will become locked, but they never get together. This is due to the construction of the commutator. If there are thirty coils of wire on the armature-ring, there will be thirty commutator-bars in the commutator-ring, and these bars are insulated from each other; and as

the beginning of one coil and the end of the other is connected to one bar, and the brush bears on one bar at a time, as in Fig. 325, a pole will be formed on the

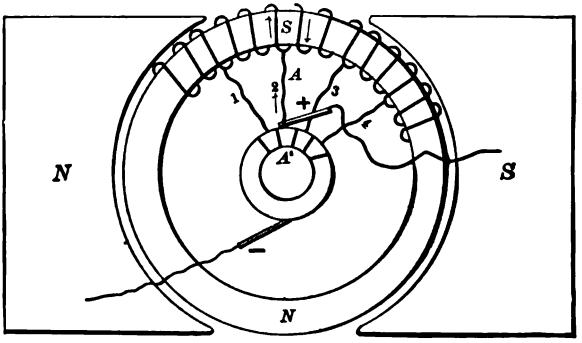

FIG. 325.

ring where the wire from the commutator connects to the winding, as *A*, Fig. 318. The pole will remain at this part of the ring as long as the brush remains on the

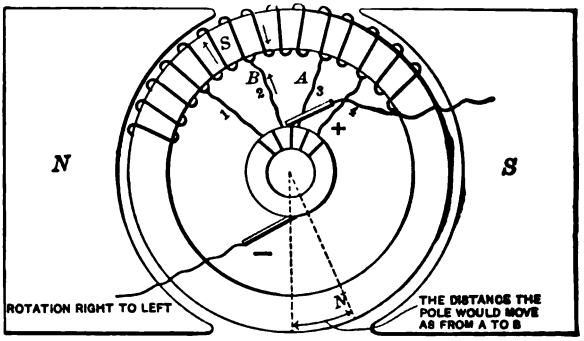

FIG. 326.

commutator-bar *A'*; the pole *S* on the ring will move with the ring through an arc of a circle due to the width of the commutator-bar, or from *A* to *B*, Fig. 326. Then

the brush will leave the bar and pass to the next one, forming the N. pole at right angles again, as Fig. 327,

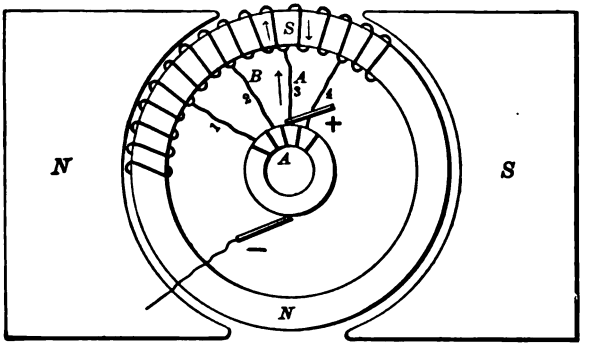

FIG. 327.

which, with Figs. 325 and 326, shows the cause of rotation of a motor armature and of shifting the poles in the armature-ring. As it appears, the poles jump backward after travelling ahead, but in no case can the poles of the fields and those of the ring get together, as has been explained. The action is the same for the negative brush (—). The width of the commutator-bar determines the distance the poles formed in the ring will travel and how near they will approach the field-poles.* This action is continued as long as current is supplied to the motor, and this is why a motor armature revolves. This action is the same with a drum armature. In smaller motors as applied to street-cars and some locomotives the armature is not connected directly on to the axle to be driven, but they have a small pinion on the armature-axle; this meshes with a large gear-wheel

* It is to be understood that the attraction between the poles in the ring and the field-poles causes the ring to rotate.

on the car-axle. This is called a single-reduction motor. By this it will be seen that the armature has a much higher speed of rotation than the axle being driven: therefore a higher counter electro-motive force can be generated than would be if directly connected to the axle, although they are direct-connected motors or gearless. The larger electric locomotive use this type generally.

COUNTER-ELECTRO-MOTIVE FORCE.

It is well to understand the meaning and action of counter E. M. F. This force is generated in the armature of a motor by the armature rotating and the winding on the core cutting the lines of force of the fields through which they are passing, or, in other words, the motor is acting as a dynamo; and it would be well to state here that a dynamo and motor are one and the same, that is, the dynamo will act as a motor if current is applied to it, and the motor will generate current if driven.

The construction of the motor and dynamo is nearly the same, the only difference being in details and conditions of winding. Railroad generators are much larger in dimensions, and usually compound wound, while the motor can be made as large as the generator if so desired. This counter-electro-motive force thus generated in the motor armature has the effect of opposing the flow of the current that is being delivered to the motor to operate it. At first thought this might seem to be a detriment, but it is in reality a benefit. Fig. 328 shows the action of C. E. M. F. The one is a motor and the other a dynamo; the arrows show

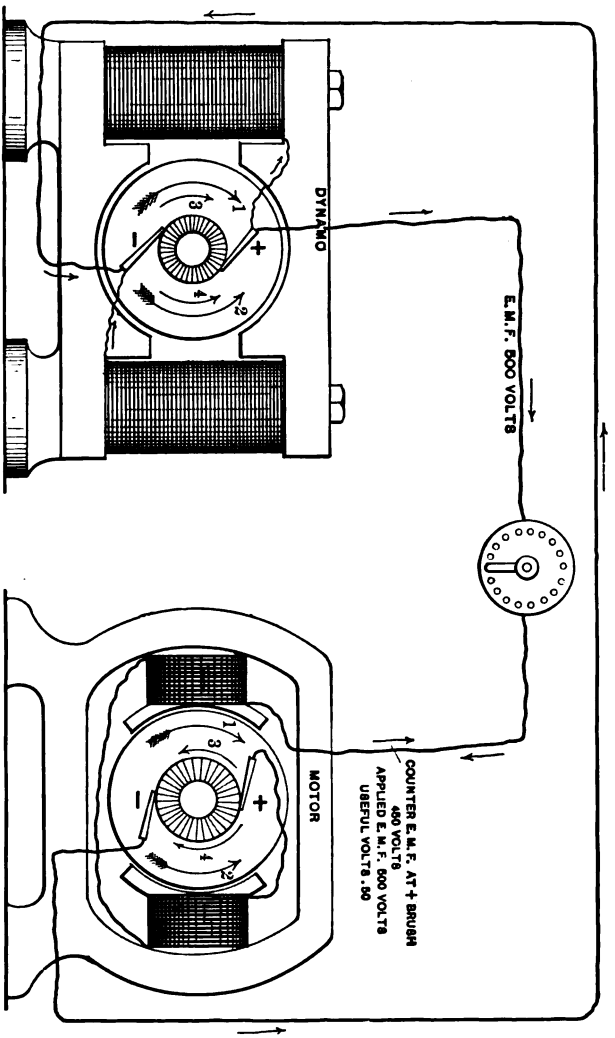

FIG. 328.—ILLUSTRATING COUNTER-ELECTRO-MOTIVE FORCE.

the course of the currents between the two. To show how the C. E. M. F. is beneficial: If there was no C. E. M. F. produced in the armature in order to supply current to a motor for a given power or speed, a resistance would have to be used in the circuit to prevent the rush of current through the motor. This is a very bad feature, as by using the resistance there would be a large loss of current and energy, because the current thus checked in its flow is wasted in heat, as can be easily seen in a resistance-coil. Then, again, a motor operating under a maximum current is not the most efficient, as there are losses due to resistance in the motor. Then it is seen that this counter E. M. F. produced by the motor itself is of a practical value in governing the amount of current supplied to the armature. The C. E. M. F. of a motor is proportional to the speed of the armature (number of conductors) or windings and the strength of the field-magnetism. The table shows the effect of C. E. M. F. of a motor at different speeds by an experiment at a technical college. The current supplied at no speed was 20 ampères; following shows the decrease:

Rev. per Min.	Current in Ampères.	Rev. per Min.	Current in Ampères.
0	20	160	7.8
50	16.2	186	6.1
100	12.2	195	5.1

If the speed of a motor was so great that the counter E. M. F. generated by it was equal to the applied E. M. F., no current would flow to the motor: to do this the motor would have to have some other force to drive it along, as in the last case of 195 revolutions it took 5.1 ampères to run the motor against friction.

The idea of explaining this C. E. M. F. clearly is for future use, as in motor regulation. In Fig. 328 C. E. M. F. is clearly shown by the dynamo and motor, which are connected by the proper circuits; they are both rotating right-handed. As an example it is supposed that the dynamo or generator is supplying current at 500 volts pressure to the motor, and the motor is producing a counter E. M. F. of 450 volts at the brush; then the C. E. M. F. is opposing the applied E. M. F., as is shown by the arrows in the drawing, and the useful voltage would be 50 volts.

In the dynamo-armature arrows 1 and 2 represent the E. M. F., and arrows 3 and 4 represent the current; and it is seen that they flow in the same direction. Now in the motor the arrows 1 and 2 represent the C. E. M. F. of the motor-armature, and arrows 3 and 4 represent the current applied from the dynamo.

REVERSING A MOTOR.

An electric motor is capable of being reversed in its rotation, which is a valuable feature, and the law of changing the flow of current to change the polarity adapts itself to the conditions required to cause a motor to rotate in different directions. There are two ways in which a motor may be reversed: first, by changing the direction of the current through the armature; second, by changing the direction of the current through the fields. But if the current is reversed in both field and armature at the same time the motor will continue to rotate in the same direction in which it was running before the current was reversed; so then it is seen that the fixed law is, the current must be re-

versed in only one of the parts to cause a reversal of motor. Fig. 329 shows the action very clearly; the motor rotating from right to left, north pole of the field on the left side and south pole on the right; in the armature the S. pole is at the top of ring and the N.

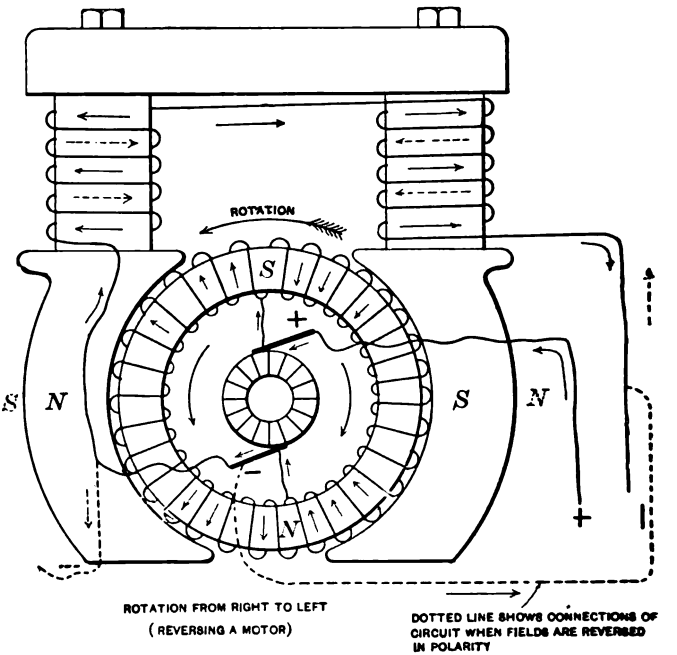

FIG. 329.

pole at the bottom. The S. pole of armature is being drawn to the N. pole of field. The current is entering the positive brush (+) of armature on top of commutator, and the current is flowing downward on both sides of the ring and passing into negative brush in

bottom of commutator-ring. Fig. 330 shows the armature rotating from left to right. The poles of the field remain the same as in Fig. 329, but the polarity in the armature-ring is changed. The N. pole is at the top of ring and the S. pole is at the bottom.

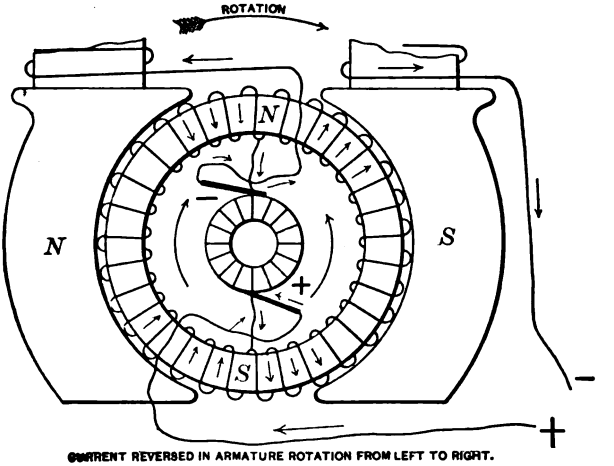

FIG. 330.

What is the cause of this? The direction of current through the armature is changed; instead of it entering the brush on top of commutator and entering the ring at the top, the current is entering the brush at the bottom of commutator-ring and is entering the armature-winding at the bottom, and is flowing upward toward the top of armature-ring and passes into the negative brush, thus forming poles of opposite sign to that of Fig. 329. Now it is seen that the motor must rotate from left to right, as the N. pole in armature will be

drawn to the S. pole of the field on the right, and from S. pole on armature to the N. pole of field on the left.

It is to be understood that all the leads to the commutator are not shown in Figs. 329 and 330, only those two in which the current is entering and leaving the ring; also the law that poles of the same sign repel is illustrated here, as the N. poles will repel each other, also the S. poles. To change the direction of rotation by changing the polarity of the fields the current must be sent through the coils in an opposite direction to that in Fig. 329, but the direction through the armature must remain the same. Dotted letters show the polarity due to change in field (Fig. 329), and the dotted lines from negative brush show the circuit to the field when the current is sent in the reverse direction, and the dotted arrows show the flow of current around the fields. Now it will be seen that the armature must revolve from left to right.

RESISTANCE-COIL OR RHEOSTAT.

The object of a rheostat is to control or regulate the amount of current that is to flow to a motor if used in connection with one, and is the same as a throttle-valve to a steam-engine. The amount of current that will flow in a circuit depends on the voltage and resistance in the circuit, so that if it is desired to take a small amount of current from a circuit having a large current and voltage a resistance must be used to check the flow of current and allow only that which is desired. It is for that purpose a rheostat is used. As an example, the main circuit has a voltage or press-

ure of 50 volts and the rheostat has a resistance of 10 ohms. The amount of current that will flow from the main circuit through the rheostat will be 50 volts divided by the resistance, which equals 5 ampères of cur-

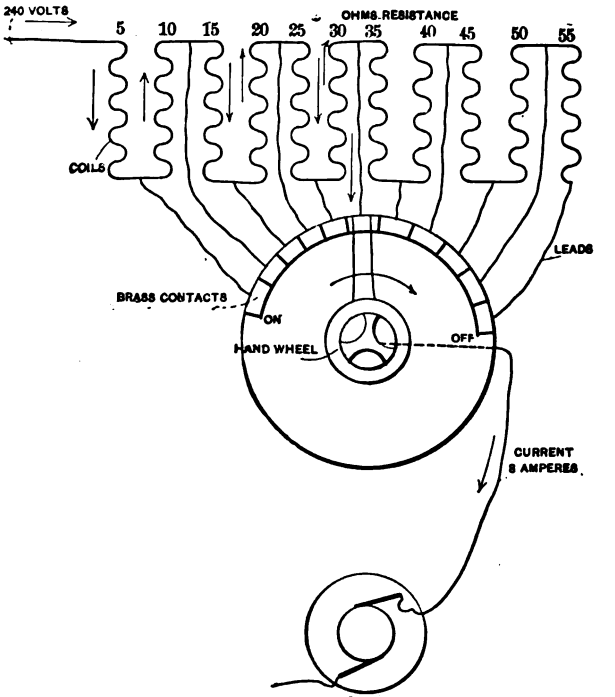

FIG. 331.—RHEOSTAT OR RESISTANCE-BOX.

rent. Or if it is desired to find what resistance a rheostat must have for a motor on a circuit of 230 volts to allow a current of 20 ampères to flow through it: According to Ohm's law resistance equals electro-motive

force divided by current; then $230 \div 20 = 11.5$ ohms as the resistance of the rheostat. As has been stated before, the resistance is reduced as much as possible to prevent loss of current due to heat, so as the motor gets up to speed the resistance can be cut out. Why? Because the counter-electro-motive force generated by the motor will help check back the current. In electric locomotives resistance is used only in starting to

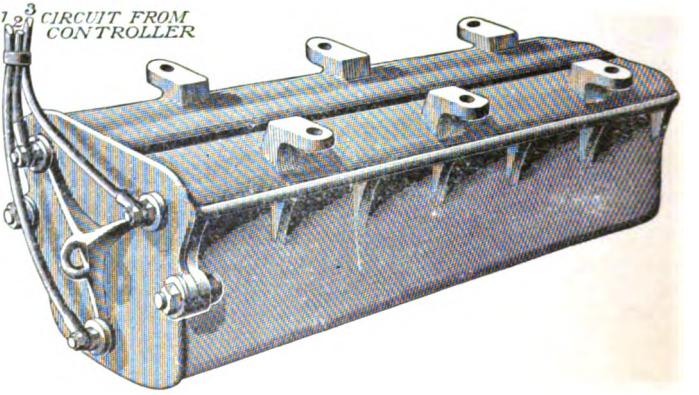

FIG. 332.—DIVERTER OR STARTING-RHEOSTAT.

prevent a great rush of current through the motors, and then is cut out as the motors increase in speed or are changed in their combination.

A rheostat as usually made is a box full of coils of wire connected in series, as Fig. 331; the current enters the first coil on the left. In the centre of this box is a lever, which can be pushed over the brass pieces or contacts. Wires lead from each of the coils to each brass segment. These segments are insulated from

each other, so the current must pass through the coils as shown. The lever is on the centre segment. The current passes from the centre coil into the lever to the motor circuit as shown. The different coils represent different resistances, so that any resistance within the limit of the rheostat can be had by moving the lever over the segments or contacts. The general form of resistance used in the electric locomotive is shown in Fig. 332, which is called a diverter or starting-rheostat. Resistance-coils are made of German silver, iron wire, and carbon, also sheet metal with insulation of mica and asbestos between the sheets. These sheets are connected in series, and suitable leads are connected to contacts. In the controller the use of the diverter can best be seen as in Fig. 344, 1 to 10.

VOLTMETER.

The voltmeter fulfils the same purpose on the electric locomotive that the steam-gauge does on the steam locomotive—shows the pressure of the current. The

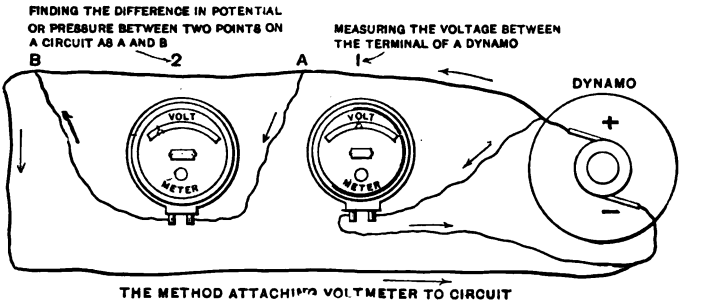

FIG. 333.

voltmeter is attached across the main circuits, as shown in Fig. 333. Thus acts as a shunt to the mains.

The general construction is shown in Fig. 334, which is a Weston voltmeter. In the centre is a small cylinder of iron. Surrounding the cylinder is a small coil of fine wire of high resistance mounted on a spindle; the pivots rotate in sapphire jewels. To counteract the movement of coil are two spiral springs. Sur-

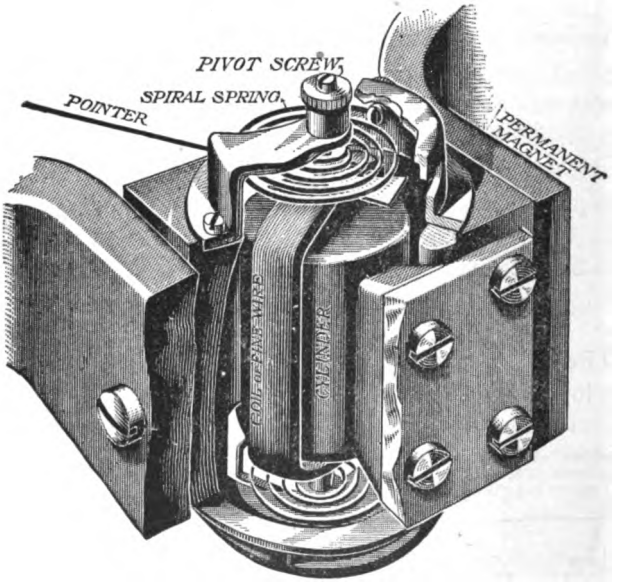

FIG 334.—DETAILS OF VOLTMETER.

rounding this cylinder and coil are the poles of a permanent magnet; on the pivot-shaft is a pointer or indicator same as a steam-gauge hand; at the end of this pointer is a scale in volts and fractions of volts, although the meter used on a locomotive would be a

direct-reading, dead-beat instrument. What is meant by this is that direct reading there is no multiplying

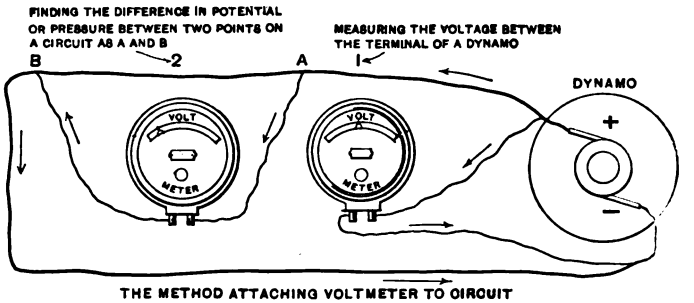

FIG. 335.—THE METHOD OF ATTACHING VOLTMETER TO CIRCUIT.

constant used, as the scale shows the volts pressure. Dead-beat means that the pointer comes to a rest im-

WESTON VOLTMETER
0 10 20 30 40 50 60 70 80 90 100 110 120 130 140 150
MADE BY
WESTON ELECTRICAL INSTRUMENT COMPANY
NEWARK, N.J. U.S.A.
PATENTED
No. 520

FIG. 336.—WESTON VOLTMETER.

mediately without any swing. To find the difference

in potential or pressure between any two points on a circuit the two terminals of the voltmeter are attached to the two points on the wire to be measured (see *A* and *B*, Fig. 335). The operation depends on the pressure or voltage in the circuit to force a small amount of current through the coil to the negative side of the circuit. By so doing the current in the coil and the poles of the permanent magnet cause rotation of coil or deflection of pointer over the scale, thus recording the pressure in volts. Fig. 336 shows a full view of voltmeter and scale.

AMMETERS.

The use of the ammeter is to indicate the amount of

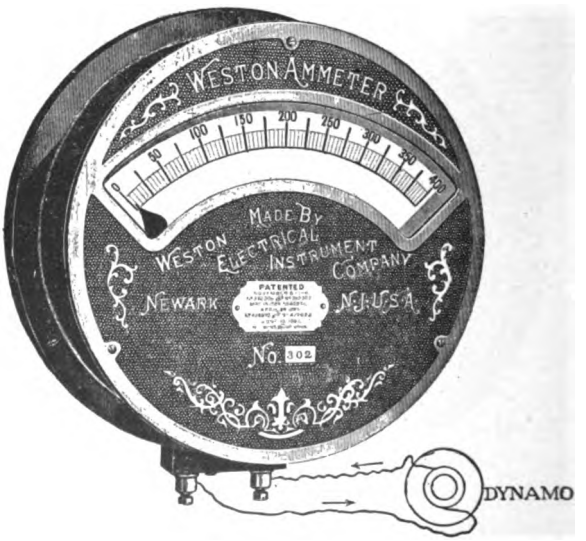

FIG. 337.—WESTON "ROUND-PATTERN" AMMETER, IN SERIES WITH CIRCUIT.

current flowing through the circuit in ampères. Instead of the terminals being connected across the circuits as with the voltmeter the ammeter is in series with one side of the circuit or forms part of the circuit and thus takes the whole current through it, and is wound with a small number of heavy wires, depending on the current it is to carry. Fig. 337 shows a Weston ammeter; the construction is the same as the voltmeter except the wire on the cylinder. The reading depends on the amount of current flowing through the coil. There are many kinds of ammeters, but depending on the principle described. They are also made that only a part of the current shall flow through the meter; this is for exceedingly large currents. The ammeter is connected in parallel with the main circuit, the scale being calibrated.

AUTOMATIC CIRCUIT-BREAKER.

The automatic circuit-breaker acts the same as the safety-valve to a steam-boiler and protects the motor or generator, in case of a ground or overload. The current-breaker will be found on all electric locomotives. There are several types used, but the action depends on one principle, that is, a magnet so wound that when a certain number of ampères flow through the magnet-winding it will attract an armature which forms a trigger or lock; this causes the release of a spring which opens the switch, thus breaking the circuit. The number of ampères that will flow through the circuit can be readily adjusted to any desired amount. The point in all designs is to prevent spark-

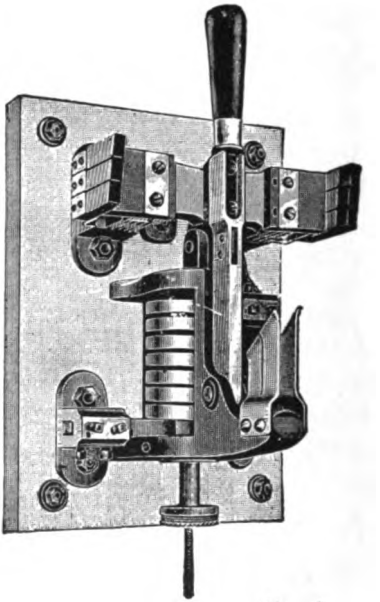

Closed.

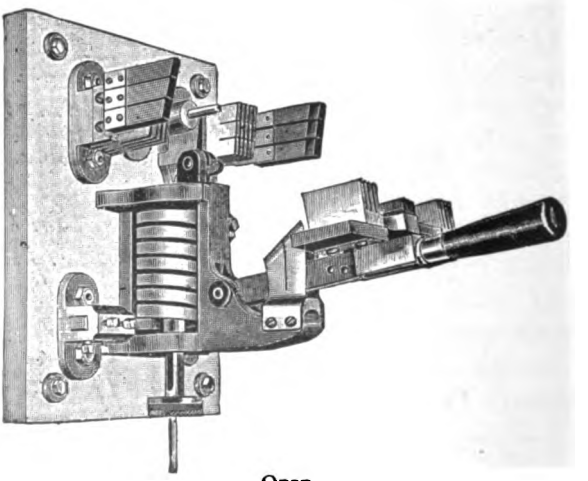

Open.

FIG 338.—DIRECT-CURRENT AUTOMATIC MAGNETIC CIRCUIT-BREAKERS. 500 VOLTS.

ing or arching at the switch-points, which is destructive and breaks the switch down. One way is to provide a magnetic blowout, which blows the arc out and thus prevents breaking down of switch. Another is to make the final break on high-resistance carbon points

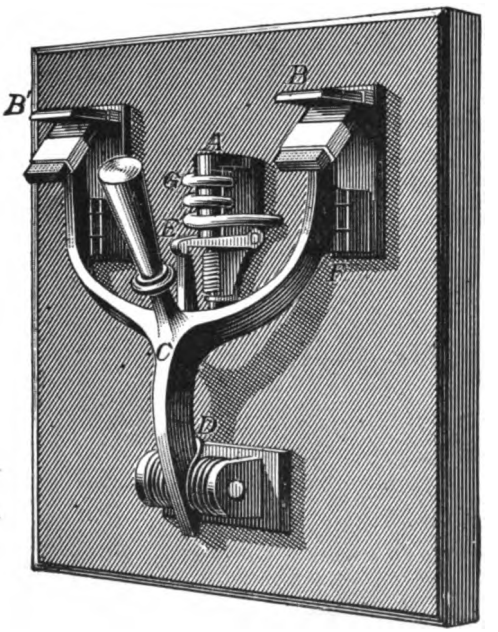

FIG. 339.—CIRCUIT-BREAKER.

A, magnet; *BB*, carbon points; *C*, switch; *D*, spring; *E*, trigger; *F*, switch-points; *G*, magnet-wire (main circuit).

In the breaker shown in Fig. 338 a fuse is used in shunt with the circuit, and after the switch is at the point of opening the fuse will take part of the current, thus provide a by-path and prevent the arcing at switch. When

the fuse takes the full load, it is blown, and the circuit is broken complete.

Fig. 339 shows the general principle of construction of an automatic breaker more plainly than Fig. 338. In Fig. 338 the breaker is shown in two positions, open and closed.

FUSE.

The object of having a fuse is to provide against heavy currents or overloads. A fuse can be made of an alloy of tin and lead ; a copper wire may be used. The idea is that the fuse, being of certain size and having certain fusing-points, will carry a certain amount of current in ampères, and if from any cause there should be an extra amount of flow over what the capacity of the fuse

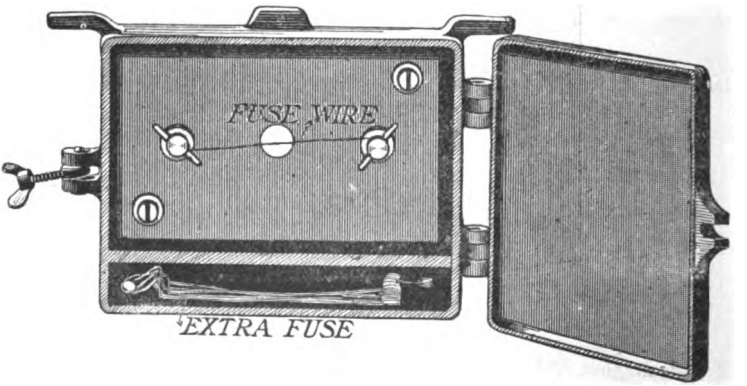

FIG. 340.—FUSE-BLOCK.

is the fuse will melt, thus opening the circuit, and save the motor from being burned out. Fig. 340 shows fuse-block. This is made of iron, slate, and asbestos and is of a novel design. The fuse is a simple copper wire.

It is placed upon the slate back of an iron box, which is entirely closed with the exception of a hole in the slate before which the fuse-wire passes. The rush of the heated air through this hole when the fuse is blown effectually blows out the arc. A pocket at the bottom of the box inside the door is provided for carrying extra fuses. This fuse is placed in the circuit between motors and trolley-wire when used on street-car motors and electric locomotives which take their current from a trolley-wire.

LIGHTNING-ARRESTERS.

The purpose of a lightning-arrester is to act as a safeguard to the insulation of the motors from the lightning discharge. Lightning, in striking the line, will find the shortest path possible to earth. Then the motors of a locomotive, being in parallel with the line and the earth, afford a path for the lightning discharge. Lightning, being of high electro-motive force and small current, can leap across a gap where the current from the generator would not. This fact is taken advantage of in constructing arresters. If there are no arresters provided, the lightning will enter the winding of the motor fields when they are on the trolley side, and the field-windings, being of many turns of wire, form a high resistance to the flow of the lightning discharge, and form a high self-induction, which also has the effect to choke back or retard the passage of the discharge. The discharge, as has been stated, having a high E. M. F., seeks the shortest path to ground by disrupting or breaking down the insula

tion of the field-winding and finding its way to earth through the field-cores or the iron of the motor and wheels of the locomotive. This provides a path for the current from the generator to the ground and thus short-circuits the motor, and where an arc is formed, if in the winding, will burn the insulation. There are many different forms of arresters, all depending on the principle that the discharge will leap a gap between two points rather than pass through a more tortuous path through the motor (Fig. 341). The one point de-

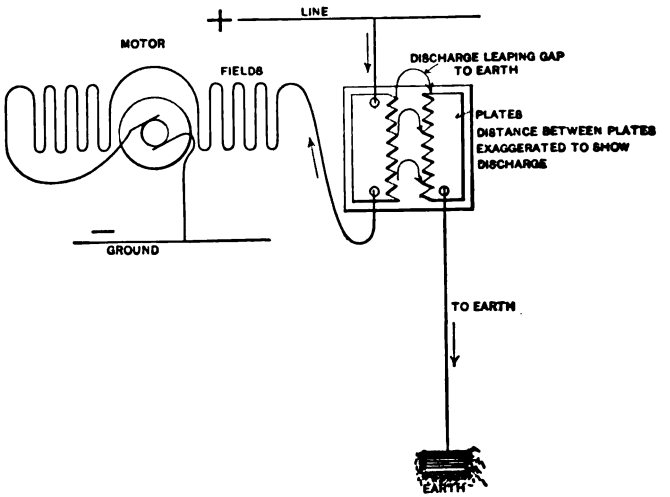

FIG. 341.—LIGHTNING-ARRESTER, COMMON STYLE.

sired in a good arrester is that it will act promptly and disrupt the arc formed across the air-gap so as to stop the flow of the current from the circuit which will follow the lightning discharge.

There are different ways of doing this,—magnetic

blowout; magnetic attraction of an armature, which forms one end of the circuit to earth,—but the most common is two brass plates having teeth similar to saw-teeth, one connected to the line and the other connected to the earth circuit, the two plates set with teeth separated $\frac{1}{16}$ of an inch from each other. Fig. 341 shows the action of the lightning leaping across the gap and passing to earth. In the magnetic blowout the advantage is taken of the fact that if an arc is placed between two poles of a magnet the arc will be deflected to one side, and if strong enough will disrupt or blow the arc out. So it is with this style of arrester: the discharge takes place between the two poles of an electro-magnet which is energized by the flow of current, which blows the arc out and breaks the circuit to ground. (See Fig. 342.)

FIG. 342.—MAGNETIC BLOWOUT.

CHANGE OF SPEED.

The method mostly used to change the speed of motors is to change the strength of the fields, and in practice motors are wound with a large amount of winding on the fields, so that a maximum strength of field is attained with a small current as compared with

the maximum current. This is equivalent to saying that the magnetism given by a small current is yet sufficient to saturate, or nearly saturate, the iron of the magnets. If the fields be kept below the point of saturation and be varied in strength, the speed can be varied to a certain degree; if a car is moving on a level, to produce a counter E. M. F. of 400 volts and the applied E. M. F. is 500, and the resistance of armature circuit is 10 ohms, the current flowing should $= \frac{500 \text{ volts} - 400 \text{ volts}}{10 \text{ ohms}} = 10$ ampères of current. Then the mechanical work done would be 400 volts × 10 ampères = 4000 watts. Now if it is desired to run slower and the field strength is increased 10 per cent, the counter E. M. F. at the same speed would be 440 volts; the current $= \frac{500 \text{ volts} - 440 \text{ volts}}{10 \text{ ohms}} = 6$ amèpres of current. Then 6 ampères × 440 volts = 2640 watts. Now the motors required 4000 watts to maintain the former speed; it is evident that the motors will run at a slower speed under the new condition, due to greater field strength.

The second important method of regulating speed under varying loads is found in the variation of the E. M. F. applied to the armature. From what has been said concerning the measure of work done it will be readily seen that, other things being equal, decrease of applied E. M. F. must be followed by decrease of output, and increase of E. M. F. by increase of output. Let us again consider the case of a motor developing 400 volts counter E. M. F., the applied E. M. F. being 500 volts, the current being 10 ampères, and

the resistance to motion being uniform. If now we reduce the applied E. M. F. (E.) to 450 volts, and if we conceive that for a moment the counter E. M. F. (E'.) remains at 400, the current would be reduced to 5 ampères; thus, $\frac{450 \text{ volts} - 400 \text{ volts}}{10 \text{ ohms}} = 5$ ampères. Such a change would reduce the output to one half its former value. The speed would then necessarily drop to one half unless this decrease of output be checked in some way. This check would come through the fact that a decrease in speed would be followed by a corresponding decrease of E' which would at once increase C'. In case two or more motors be used on one car or train there remains a third method of producing a considerable range of control, namely, by changing the machines from the multiple to the series arrangement with respect to each other, and *vice versa*. The applied E. M. F. is just one half in the second case what it is in the first if there be two motors, one third if there be three, and so on. A variation of this method might be had by changing the field-winding, leaving the armatures permanently in series or permanently in multiple. The series arrangement of the two machines is of special value in starting a car and in maintaining low speeds. In both cases it may become the equivalent in effect and the superior in economy of either of the above, described methods of control. Through this method it is indeed possible to make the same motors fulfil widely different service conditions. Thus, suppose cars are to begin their trips in the most populous portions of a city where many stops and relatively slow running are unavoidable, while on reaching

the suburbs long runs at high speed are desired. We may then design motors which if placed in multiple and permitted to run at say 25 miles an hour will develop each 25 horse-power. If placed in series, they would each develop 12.5 horse-power at 12.5 miles per hour, and at both speeds their efficiency may be high.

To meet speeds lower than 12.5 miles per hour, the load such as would permit only that speed if the impressed E. M. F. be 250 volts (half of 500 for each), we may resort to either of the two methods of general control, the motors as a whole being kept in series. So for speeds between 12.5 and 25 miles per hour, the torsional effect required being still the same, we may in like manner control the two motors placed in multiple. In case of any heavy and long grade this latter arrangement would be used.*

CONTROLLER AND SPEED-REGULATOR.

The electric locomotive is as capable of control as a steam locomotive, and can be made to run under various speeds and loads. To regulate speed there is a controller on the locomotive usually of the series-parallel type. In the older forms of controllers the rheostat was used to regulate the amount of current that would flow to the motors, on street-cars and the smaller types of locomotives having two motors. These motors were connected permanently in parallel, the current dividing, one branch passing through each motor, and then joined again in a single circuit, passing to the ground. The reduction of the line-pressure to

* Crosby and Bell.

a point at which the motors would start was regulated by the rheostat placed in the circuit between the trolley and the motors. As the current divided, half flowing through each motor, the amount of current required would be double that required by one motor to move its share of the load. All this current had to flow through the rheostat. The pressure dropped in the rheostat is dead loss, and produces no work, but is wasted in heat. By multiplying the drop by the current flowing the total loss can be found. Of course when the motors get up to speed, the resistance is gradually cut out. An effort was made to overcome this loss, and the series-parallel controller was devised. In this the motors are first connected in series; the circuit passes first through one motor and then the other without division. By this means, together with a very slight resistance, which is instantly cut out, the proper starting-pressure is applied without loss; and, the motors being in series, the same current that starts one motor flows through and is used over again in the second motor, thus taking one half as much current from the line as in the rheostatic method of control. After the car is started, current to each motor is increased by gradually throwing the motors in parallel with no resistance in circuit. It will be seen that the final or full speed connections are the same in both methods. Fig. 343 is a full view of a series-parallel controller open, showing the contacts, revolving cylinder, and reverser. The figures marked from 1 to 10 in Fig. 344 show the various combinations that the controller will put the motors in to start and vary the speed and power of the locomotive or car. The controller shown in

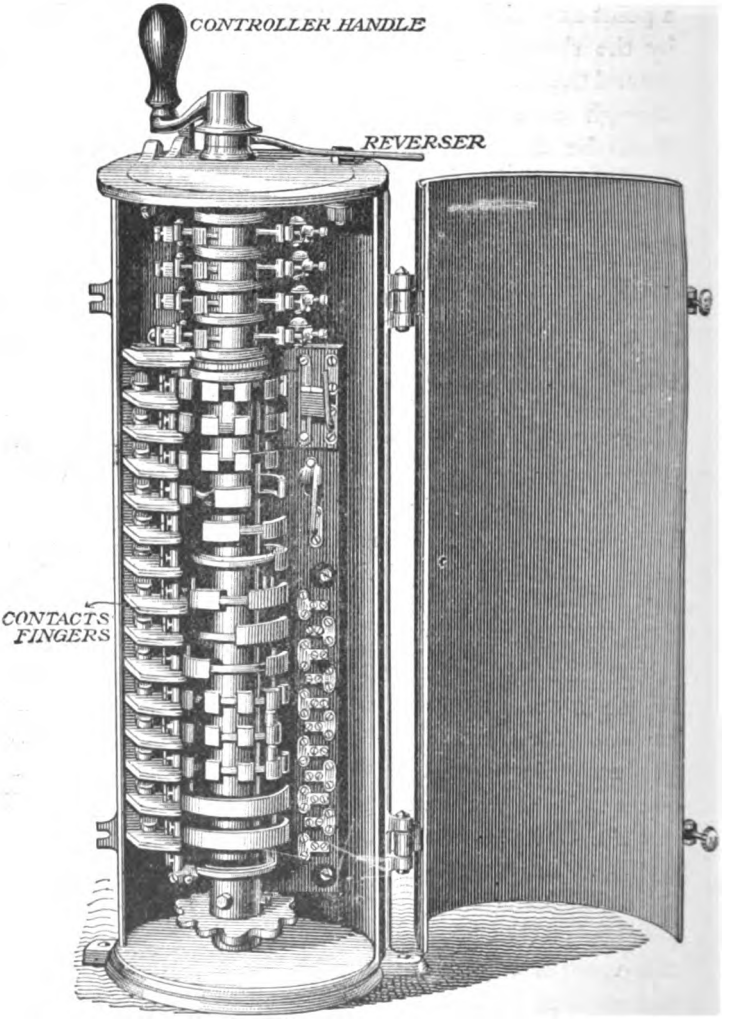

FIG. 343.—CONTROLLER, OPEN.

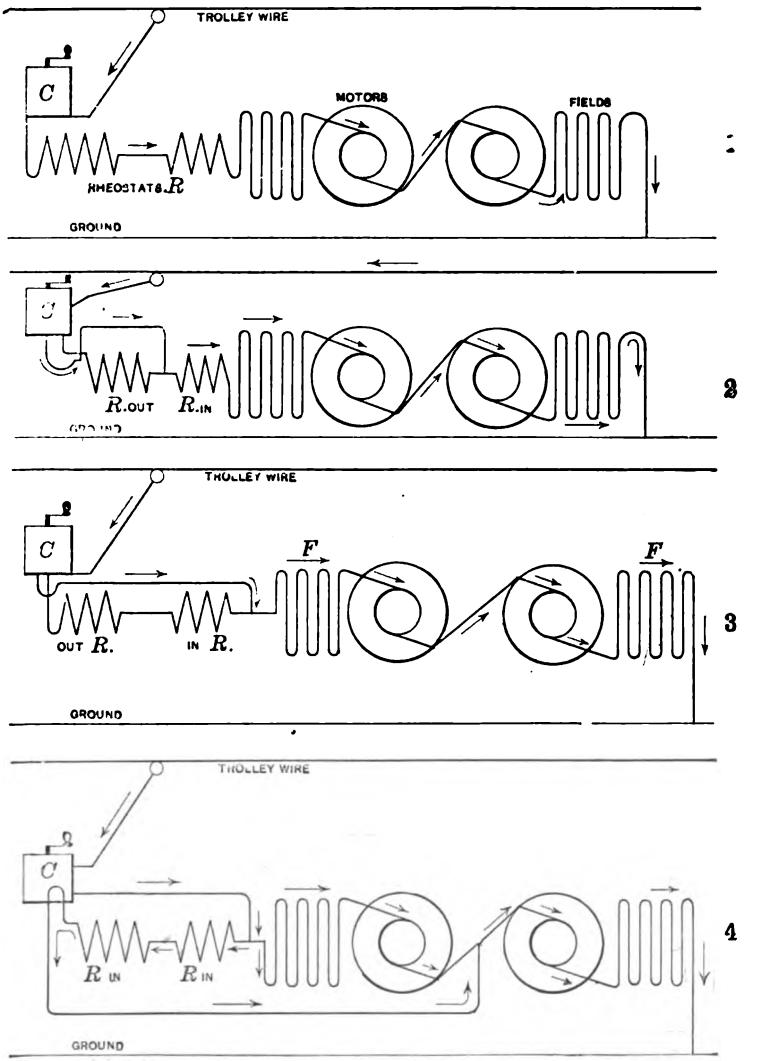

FIG. 344 (1 TO 4).—SERIES PARALLEL CONTROLLER COMBINATIONS.

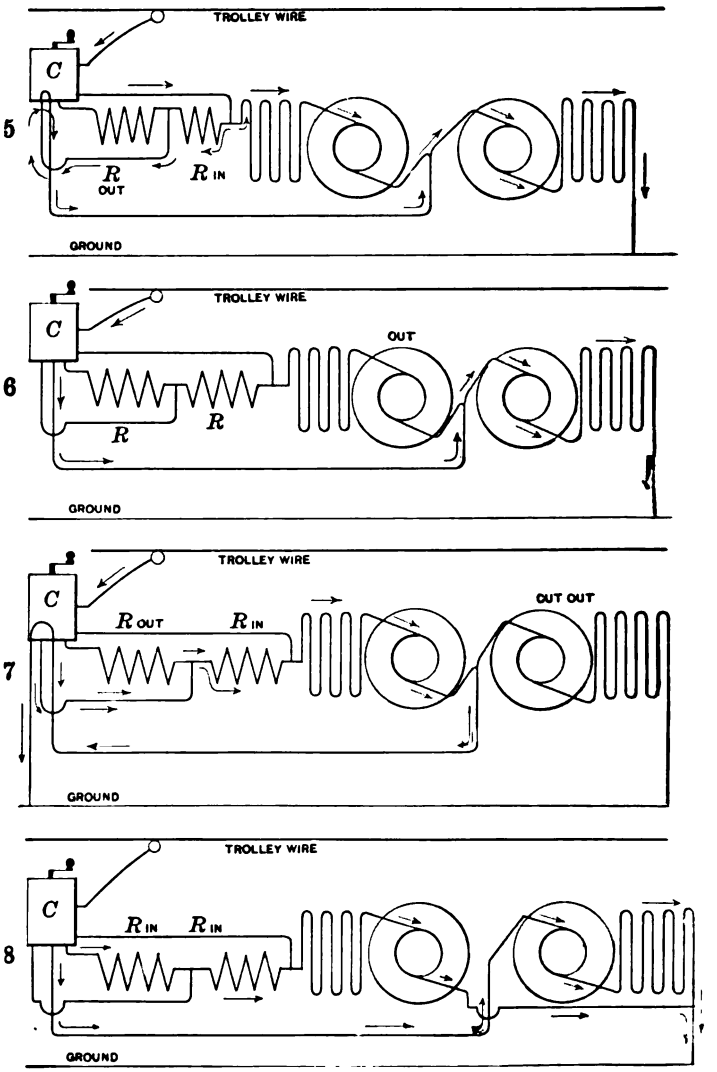

FIG. 344 (5 TO 8)—*Continued.*

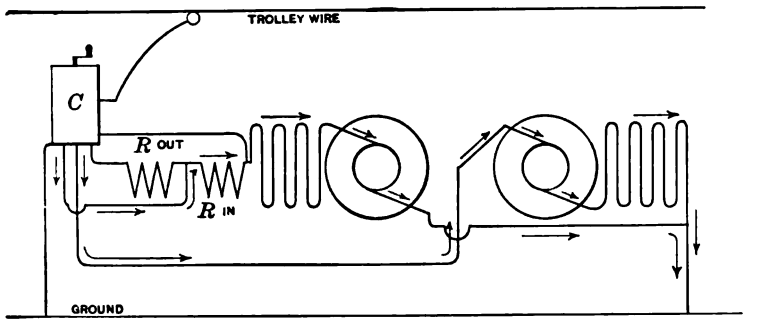

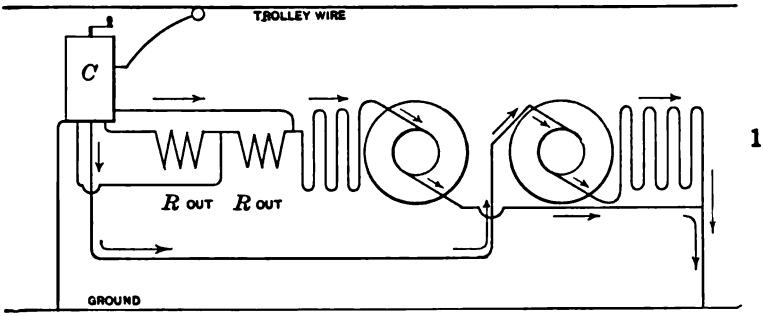

10

FIG. 344 (9 TO 10)—*Continued.*

NOTE.—Follow the arrows for the course of current.

Fig. 343 contains for two motors 13 wires going from controller to controller, as generally two controllers are used—8 motor- and 3 rheostat-wires, 1 trolley- and 1 ground-wire. The wires are joined to their respective binding-posts in the cut-out box, except the rheostat-wires. There are also short wires going from the binding-post to motors and ground, also one wire to trolley pole. This wire is led to the fuse-box, and passes through overhead switches and through a fuse-box

so that when the switches close the overhead wire is in direct contact with the controllers. The ground-wire is grounded on the motor which rests on the axle, current passing through the wheels to the ground.

DIFFERENT KINDS OF ELECTRIC LOCOMOTIVES.

Up to the present time motors have been shown separate from the locomotive proper. It will be proper now to bring the parts together, and then show the different electric locomotives in operation. The electric locomotive can be made in different shapes, and it has not yet assumed a standard outline, as the steam locomotive, except in certain cases. The street-car is in itself a locomotive. The description and illustrations will begin with the motors on a combination car and follow up to the larger locomotive, and it will be found that there is very little difference in motor construction, regulation, and operation in either case. In the smaller locomotives the motor is generally geared to the driving-axle by what is called single reduction, that is, a small pinion on the armature-shaft and a large gear-wheel on the driving-axle. By this method the armature can run much faster than the axle, and thus can produce the proper counter E. M. F. and speed. Motors used to be of double reduction. On the large electric locomotive the motor is directly connected without any gearing, which will be explained in the description of same. The locomotive shown in Fig. 345 is of the combination type, and is a little smaller in dimensions than a standard passenger coach. Four Westinghouse motors, each motor being

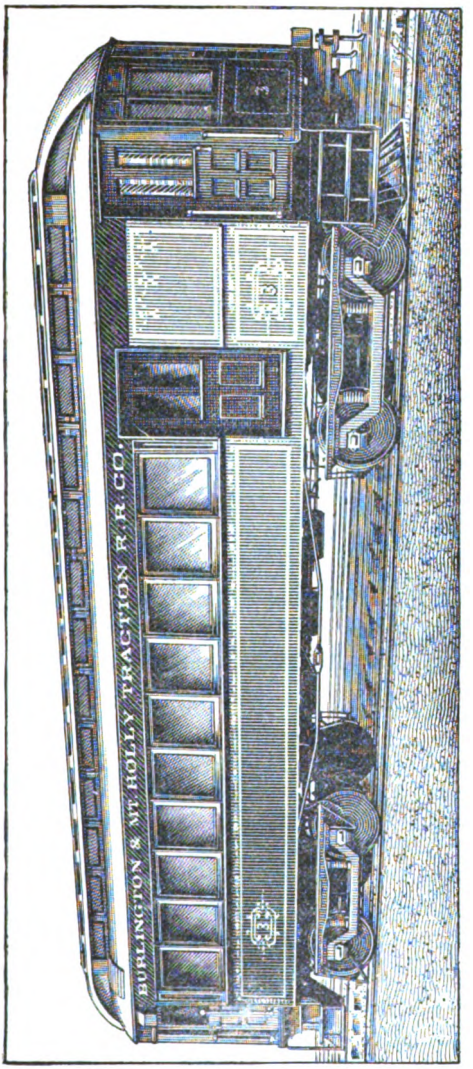

FIG 345.—COMBINATION PASSENGER AND BAGGAGE MOTOR CAR, MT. HOLLY & BURLINGTON R. R.

of 50 H.P. capacity, two on each truck, run the car. At either end of the car is a series-parallel controller and the usual equipment; also an automatic circuit-breaker is provided in this style of locomotive. The man in charge of running the car is protected from the weather and has a very clear view of the track ahead of him. It will be seen by the cut that his position is on the platform of the car, and doors open at

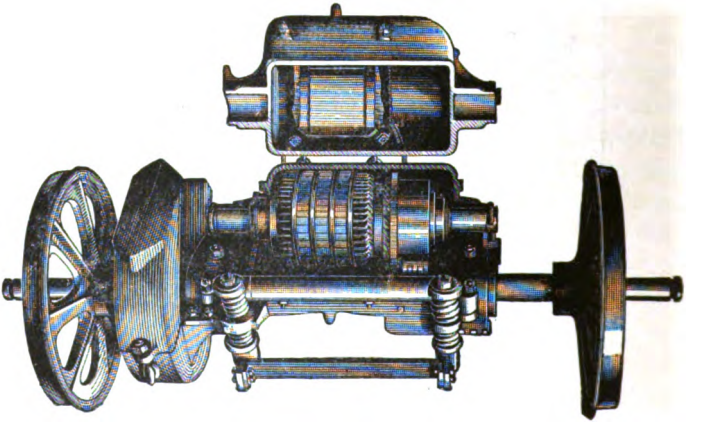

FIG. 346.—WESTINGHOUSE STEEL MOTOR, 50 H. P., FOUR-POLE, TWO-CIRCUIT, DRUM ARMATURE, USED ON BURLINGTON & MT. HOLLY MOTOR CAR.

the sides to permit passengers to get on and off, although only at one end, so it does not interfere with the man running the car. One portion of the car is used for baggage, as shown. The Westinghouse air-brake is used to stop with. The air is compressed by a pump operated by a small electric motor and so regulated that when the required pressure is reached the

motor will be stopped, this being similar to an air-pump governor used to regulate the air-pressure on a steam locomotive. The method of attaching motors to the axles of a locomotive or motor car of this style is shown in Fig. 346. Another method of suspending motors is shown in Fig. 347, a full view.

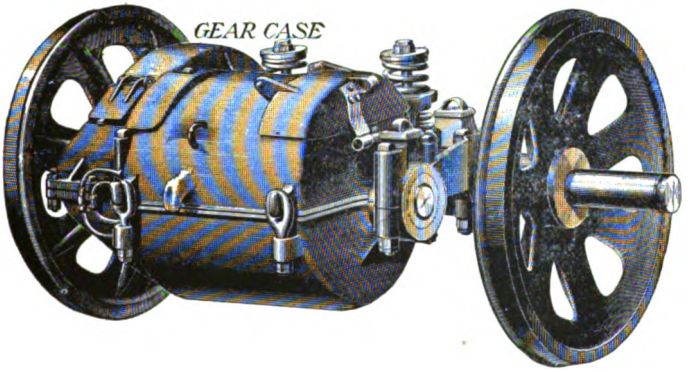

FIG. 347.—SPRING-MOUNTED STEEL RAILWAY MOTOR. (Front View.)

The method used to accomplish this is shown in Fig. 348 which is an end elevation of the motor with one wheel taken away. *B* is a U-shaped frame, the rounded end of the U being journalled on the car-axle in the ordinary way. Swinging freely between the arms of this U is the motor *A*, trunnioned by its bearing-cases. The motor is then supported at the rear by spiral springs *C*, between the lugs on the frame—which have a factor of safety in strength of twenty—and the arms of the U. This feature is also shown in Fig. 347. At the front end it is supported

by a swinging arm from the ordinary spring truck-bar *D*. It can be seen that, with this suspension, the motor rides freely on springs, readily adjusting itself to varying conditions without bringing a strain or check on any part. The gear-centres are always maintained because of the U-shaped frame.

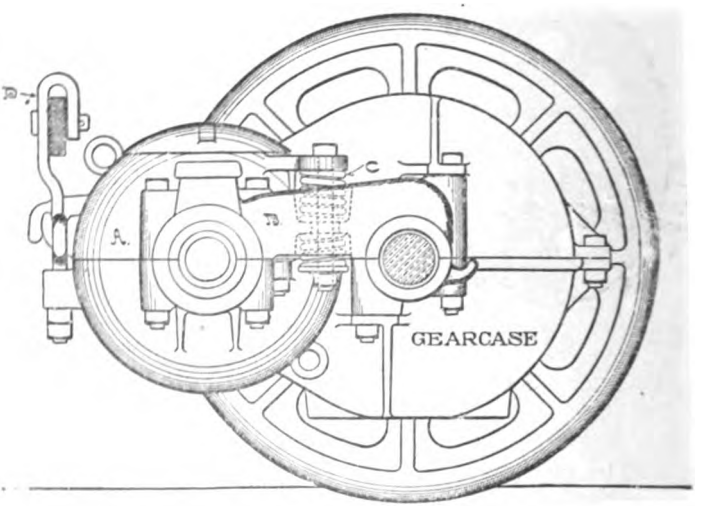

FIG. 348.—METHOD OF SUSPENSION.

ELECTRIC LOCOMOTIVE, FRANCE.

Figs. 349 and 350 show an electric locomotive that has taken the place of a steam locomotive in hauling coal and freight through tunnels, which the electric locomotive is particularly adapted to on account of the absence of dirt and smoke. In this design it will be seen how readily a locomotive can be constructed. This was in reality a flat car, which was loaded down with iron to get the required tractive adhesion. The motor was then mounted on the car. It is a series-wound motor. In order to drive the wheels a bronze pinion meshes with a large gear-wheel which forms a combined gear and magnetic clutch. The centre or hub is surrounded by a coil of wire for the purpose of making a magnet of it.

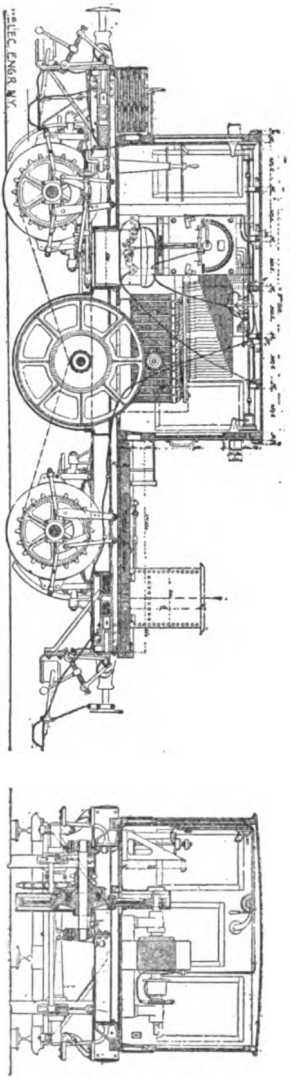

FIGS. 349 AND 350.—FRENCH ELECTRIC LOCOMOTIVE WITH MAGNETIC FRICTION-CLUTCH AND CHAIN-GEAR TRANSMISSION.

This large gear-wheel is mounted on a shaft carried on the frame of the car. Mounted on this axle is a sleeve carrying two sprocketwheels; the end of this sleeve forms a disk which forms a cone ring on its face, which fit in corresponding grooves in the large gear-wheel hub. As a whole it forms a magnetic friction-clutch. Fastened to the axles of the locomotive are sprocket-wheels: sprocket-chains run from the pinions of friction-clutch to these sprocket-wheels on the axles and drive the locomotive. The cut shows the controller, wiring-motor, magnetic friction-clutch, and gear-wheels very plainly. The current is taken from an insulated rail placed in any position, illustrated by end view; contact-shoes on the car slide on this insulated rail. The idea of the magnetic clutch is to prevent any undue strain on the sprocket-chain, as the clutch is so calculated as to slip under abnormal tension. The speed, $3\frac{3}{4}$ miles on 1.4 per cent grade, and 6 miles on the level. The total weight is 15 tons. The description of this locomotive was communicated to the *Société Internationale des Electriciens* by M. Hillariet.

THE B. & O. R. R. ELECTRIC LOCOMOTIVE. (Fig. 303).

The distance over which the electrical locomotive operates is about 15,000 feet, passing through two tunnels, 7339 feet and 265 feet long respectively, and over 7396 feet of track in the open from Hamburg street to Huntington avenue, Baltimore. Three tracks are laid into the southern portal, two tracks passing through the tunnel, four tracks from the northern portal, through the Mt. Royal avenue arch, and two

tracks as far as Huntington avenue, where a siding is provided for the electrical locomotives. There is a steady grade of .8 per cent from the southern through to the northern portal, and the lines in the open have two equated curves of 10 degrees, with a steady gradient of 1½ per cent. At the power-house end of the line the locomotives run on a siding at the beginning of the long open cut running down to the southern portal.

The operation of the freight trains begins at the main tracks south of the Camden station, where they will be switched into the cut. The electric locomotive then couples on behind, without stopping the train, and pushes it through as far as the Mt. Royal avenue portal, a distance of 8146 feet, the steam locomotive doing no work. After passing out of the tunnel both steam and electric locomotives pull and push together up the heavier grade as far as Huntington avenue, the average speed over the entire distance being about fifteen miles an hour. At Huntington avenue the electric locomotive will uncouple and run into its siding.

The plan of pushing the passenger trains through the tunnels has been abandoned, in view of the possible results if one of the cars or the steam locomotive should leave the track in front of the heavy electric locomotive travelling at thirty miles an hour. The passenger trains will, therefore, be pulled through from the Lombard street station near the south end of the tunnel to the Bolton street station at the north end.

The 96-ton locomotive, built by the General Electric Co., has the following dimensions and capacity :

Number of trucks	2
Number of motors	4–2 to each truck
Weight on driving-wheels	192,000 lbs. (96 tons)
Number of driving-wheels	8
Draw-bar pull	42,000 lbs.
Starting draw-bar pull	60,000 lbs.
Gauge	4 ft. 8½ in.
Diameter of drivers	62 in. outside of tires
Length over all	35 ft.
Height to top of cab	14 ft. 3 in.
Wheel-base of each truck	6 ft. 10 in.
Extreme width	9 ft. 6½ in.
Diameter of sleeve-bearings	13 in.

The driving-gear consists of a cast-steel spider, shrunk on and keyed to a cast-steel driving-sleeve, having a tensile strength of 80,000 lbs.

The draw-heads are of the Janney type, similar to those used on the Baltimore & Ohio passenger locomotive tenders, and are made of cast steel with wrought-iron knuckles. In coupling with freight trains the ordinary link and pin will suffice; but for passenger service the Janney couplers, with which each locomotive is provided, are used. The front and back of the locomotive is provided with safety-chains, and in addition to the regular couplings, between the trucks, safety-links are used. The buffers between the motors act as spacers for, and fit between plane surfaces in, the field-magnets. These spacers have a complete freedom of movement which allows the field-magnets to rotate when the motor is in action. These buffers and spacers are so placed as to permit the interchange and reversal of the positions of the field-magnet without requiring change in the position of the spacers. The motors are supported on carriers bolted to the field-

magnets, and rest in adjustable hangers carried on half-elliptical springs placed on top of the frame and bumpers. The frames thus carry the motors by car-

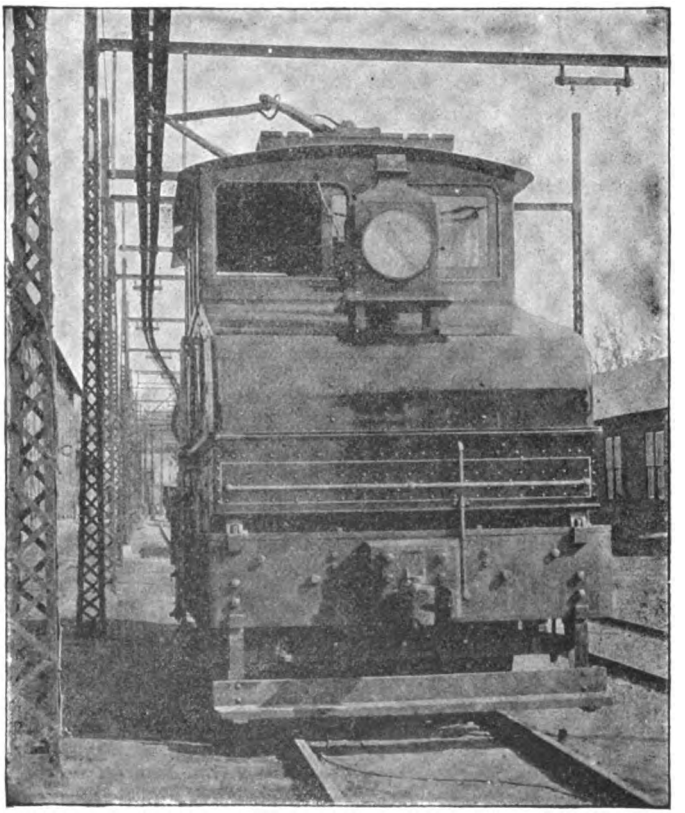

FIG. 351.—END VIEW OF B. & O. ELECTRIC LOCOMOTIVE.

riers and springs, and this load is carried in turn by rubber blocks in a cast iron casing. (Fig. 352.)

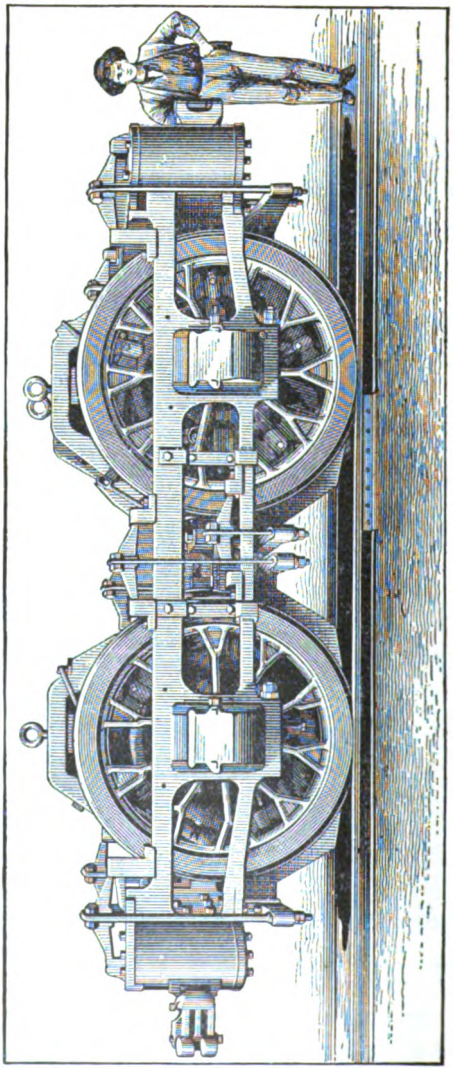

FIG. 352.—SIDE VIEW OF ONE TRUCK.

The cab is of sheet steel and the arrangement is such that all the commutators are visible to the motormen.

The locomotive is fitted with sand-boxes, and Westinghouse automatic driver- and train-brakes are provided for all wheels, bearing upon the flanges and outside tread only. A brass signal-gong 8 inches in diameter is placed in the cab to be rung from either end of the locomotive. The headlights, of which there are two, are placed on the top of the shields at each end, and are twenty-three-inch lights of Baltimore & Ohio standard pattern. (See Fig. 351.) One shield also carries a Baltimore & Ohio standard whistle, blown by compressed air. The other shield carries a standard bell, operated by an automatic air-pressure bell-ringer. The locomotive is painted with the standard color and design of the Baltimore & Ohio Company.

The gearless motors are four in number, two to each truck, flexibly supported and transmitting their power to the wheels through the flexible connections described above. They are of pyramidal shape, are the largest railway motors in the world,* and, while ponderous in appearance, are by no means so bulky as might be expected from the heavy work they have to perform. Each has six poles and six sets of carbon brushes, the brushes being connected to a yoke revolving through 360 degrees to facilitate accessibility to them. It is possible to remove four brushes without disabling the motor. The field-spools are encased in sheet-iron cases and fitted over the pole-pieces bolted to the field-frame. The armatures are built of sheet-iron laminations, and are series drum-wound iron-clad.

* At the time of writing.

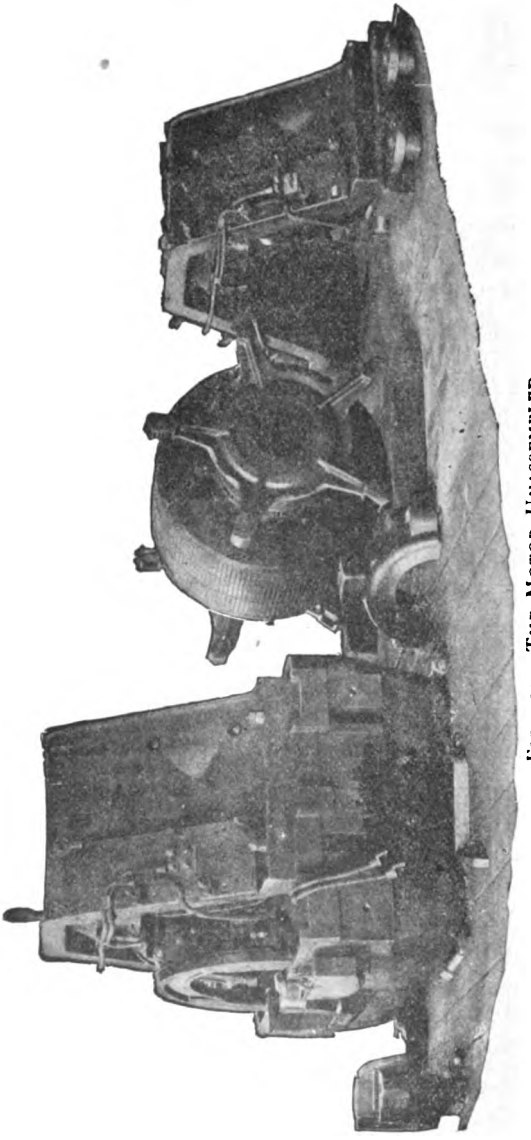

FIG. 353.—THE MOTOR UNASSEMBLED.

The armature, with the commutator, is mounted upon and keyed to the hollow sleeve which is carried on the journals on the truck-frame. The inside diameter of the sleeve is about two and a half inches larger than the axle. The entire motor is practically fireproof. Each motor is rated at 360 H. P. and takes a normal current of 900 ampères.

When normally placed, the motor rests in a position concentric to the axle, the clearance between the axle and the sleeve allowing of a flexible support. The interposition of the rubber cushions, through which the torque of the armature is transmitted to the driving-wheels, allows the armature to run eccentric to the axle when the motor departs from its normal position on account of any unevenness in the track. The motor is designed to allow of ready removal of the field-frame for inspection or repair.

A test of the first completed truck, representing one half of the locomotive, was made upon the tracks at the Schenectady shops of the General Electric Company. In order to obtain the necessary load a heavy six-wheel engine was made use of and the electric locomotive truck coupled to it. The machines were then sent in opposite directions and tugged at the connecting coupling as in a tug of war. The electric locomotive had a slight advantage over the steam-engine in weight on the driving-wheels, and pulled it up and down the track with apparent ease. For the same weight upon the drivers it was shown that the electric locomotive starts a greater load than the steam locomotive. The pull being constant throughout the entire revolution of the wheel, the difficulty of variation of pull with the

crank-angle, as in the steam locomotive, is eliminated. The test also proved the driving-mechanism and armature-couplings amply strong to transmit the torque of the armature to the axle. The controlling devices, etc., occupy the interior of the cab. The controller is erected in one half of the cab, and is of the series-parallel type. The reversing-lever projects through the upper plate of the controller-cover. The resistances are placed around the frame beneath the floor of the cab. The locomotive is equipped with a 1200 to 3500 automatic circuit-breaker and one 2000-ampère magnetic cut-out, a 5000-ampère illuminated dial Weston ammeter, and one illuminated dial Weston voltmeter. The compressed air for the whistle and brakes is supplied by an oscillating cylinder electric air-pump, the air-tanks being placed at each end of the complete locomotive. In the cab are incandescent lights.

Contact with the overhead conductor is effected by means of a sliding shuttlelike shoe of brass (Fig. 354),

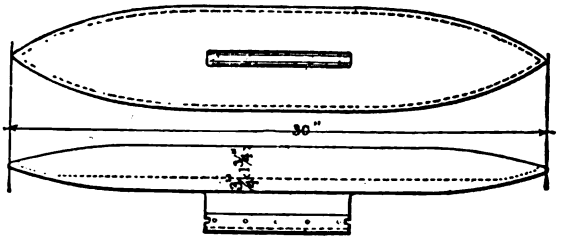

FIG. 354.—SHOE FOR TROLLEY.

which is fixed to a flexible support fastened to the top of the cab. This "trolley" support is diamond-shaped and compressible, contracting and expanding as the height demands, and is arranged to lean on one side

or the other as the locomotive runs on one side or the other of the overhead conductor. It is, however, rigid in so far as movement forward or backward over the locomotive is concerned. The current is brought to the locomotive by means of cables connected to the shoe and fastened to the "trolley" support.

The conductor is simply a reversed iron conduit or

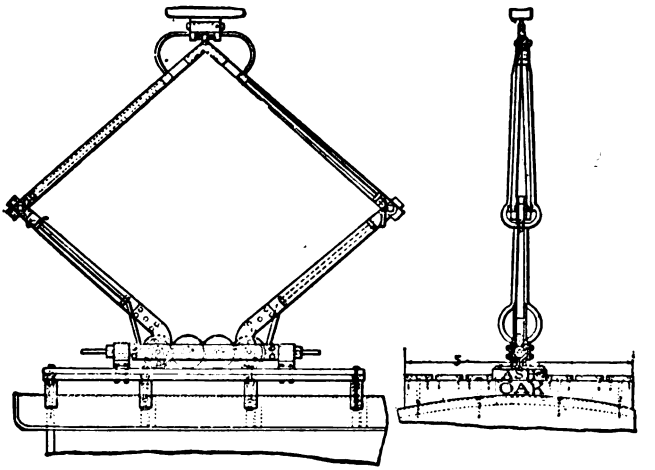

FIG. 355.—SIDE AND END VIEW OF TROLLEY.

trough erected overhead on trusses in the open, and in the tunnel attached to the crown of the arch. In the open the conductor is directly over the centre of the track; in the tunnel over the centre line of the space between the tracks. It extends from Henrietta street on the south to Huntington avenue on the north, a distance of 15,000 feet. The conductor consists of two 3-inch iron Z bars $\frac{3}{8}$ inch thick, riveted to a cover-

plate ¼ inch thick and 11½ inches wide, and is constructed in sections 30 feet long. It weighs about 30 pounds per foot. At intervals of 15 feet inside the tunnel there are suspended from the arch transverse frames, consisting of two 3-inch channels, held together by plates 4 inches wide, and holding four castings into which are fitted conical porcelain insulators. In the masonry of the tunnel are fitted the bolts necessary to support these frames. They are 2 feet 6 inches long, have split ends, and extend 12 inches into the masonry. The bolts pass downward through the outside pair of insulators. The bolts attaching the conductors to the channel-frames pass through the inside pair of insulators and support an iron stirrup in which the conductor hangs; this method affords a double insulation. The height of the conductors above the level of the top of the rails is 17 feet 6 inches in the tunnel, and they are fixed a little on each side of the centre line. This plan was adopted to avoid the risk of the conductors striking brakemen who might be standing on the top of passing freight cars. An additional precaution is provided in the shape of continuous wooden shields fastened to the iron stirrup which supports the conductors.

From the positive bus on the railway switchboard eight cables of stranded copper, each of 500,000 c.m. cross-section, or a total cross-section of 4,000,000 c.m., pass to the overhead structure immediately outside the power-house, where connection is made to three feeder-cables of 1,000,000 c.m. cross-section each, and to the overhead conductor itself, which has an equivalent of 1,000,000 c.m. cross-section. The negative bus is

similarly connected to the rails, which are double-bonded with No. 0000 wire, and also to the return-cables laid in a wooden box between the tracks. Perfect contact between bonds and web is obtained by using a hollow rivet on each end of each bond and expanding it, when inserted in the rail by, means of conical steel pin.

THE SPRAGUE ELECTRIC LOCOMOTIVE.

A Sixty-seven-ton Locomotive for Handling Heavy Freight. (Fig. 356.)

The following illustration shows an electric locomotive just completed at the Baldwin Locomotive Works after designs by Messrs. Sprague, Duncan & Hutchinson, of New York. It is intended for special experimental work in handling heavy freight and in switching, and was built for the North American company for this purpose. The locomotive resembles somewhat the ordinary consolidation type used for heavy freight-yard work. There are four pairs of drivers coupled together by quarter-cranked connecting-rods. The frame and the superstructure are symmetrical and the former is provided with freight-buffers and iron pilots. The pedestal-boxes are a special form made of cast steel and project inward, forming the brackets which carry the motors. The lower sides are arranged to be dropped out, so that the brasses can be readily replaced in the usual manner. These boxes are very large and heavy and perform the duty of carrying both the axles upon which the armatures are rigidly mounted and the field-magnets concentric to them. A stirrup projects from the upper part of each to engage

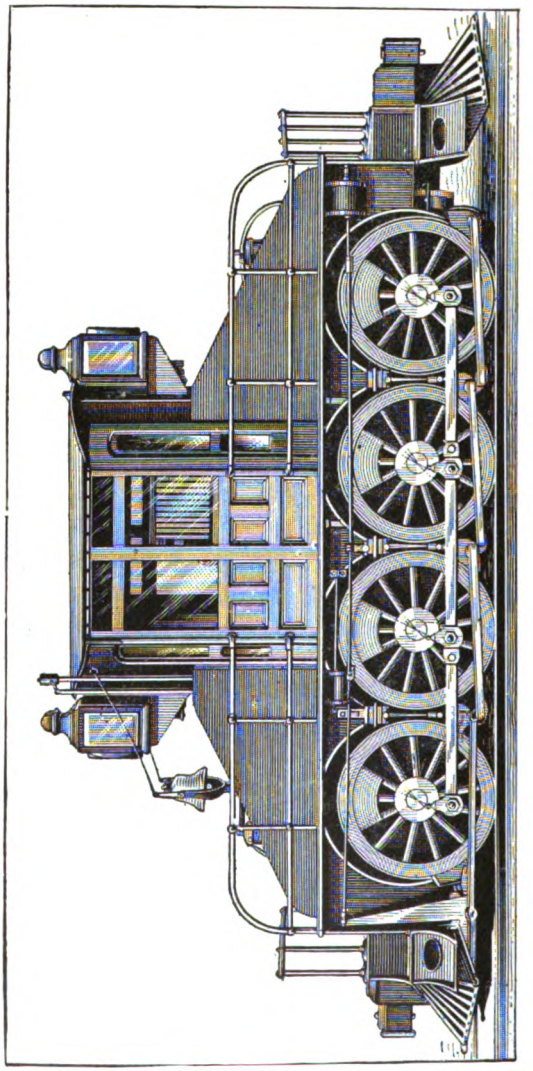

FIG. 356.—SPRAGUE SIXTY-SEVEN-TON ELECTRIC LOCOMOTIVE, 1000 H.P.

the middle section of inverted elliptical springs. There are four sets of springs arranged on the double three-point suspension system. In this way the whole superstructure is carried on equalizing springs. The drivers are 56 inches in diameter, the end ones only being flanged. The motors, four in number and alternating in position, are of the "Continental" iron-clad type, the field-magnets being formed of two steel castings, and having two field-coils placed at the ends of the motors, with their planes vertical, thus forming two consequent and two salient poles. The magnets are compound-wound, the shunt-field being light, and only sufficient to keep the speed within reasonable limits at light roads and for returning current to the line when running on down grades. The armatures, which were built by the Westinghouse Electric and Manufacturing Company, are of the slotted type, the slots having curved bottoms and tops and contracted gaps. Each slot carries four wires, but there is only one turn of wire to each bar of the commutator, and the wires are threaded through tubes imbedded in the slots. The winding is of the two-path type, giving the current only two paths in the armature.

The motors are wound for 800 volts at 225 revolutions, this being the equivalent of thirty-five miles an hour when in multiple. They will safely carry 250 ampères of current, giving each motor about 250 horse-power output at 93 per cent efficiency, and in emergencies can easily stand a great deal more than 250 ampères of current. The motors will readily exert a constant draw-bar pull of over 10,000 pounds, and have a system of regulation, giving any speed from zero to

thirty-five miles an hour, under full normal tractive effort. They can start very heavy loads, and have ample capacity to slip the wheels. The regulation is of the series-parallel system, with resistance thrown into, then cut out of, circuit, then again into circuit while changing. The groups are: first, all in series with and without variable resistance, then two in parallel by two in series, then four in parallel, with similar use of rheostat. The four motors are used all the time, there being no position in which one alone is cut out, not even in changing over. These various changes are effected by means of a large contact-cylinder on which the three main combinations are made, and a fireproof rheostat system, with the contact-arm geared in the proper ratio to the main cylinder.

To effect the prompt operation of this controlling system, which can be moved slowly by hand, air-pressure from the same tanks that supply the air-brakes is employed. This is automatically kept at a constant pressure by a special electric pump. It was deemed essential that it should be unnecessary for the engineman to watch indicators or gauges of any kind in order to know on what switch position he was running, and to this end the air-valve, which he controls, is mounted on a small lever, so geared as to move back and forth as the main cylinder revolves. His hand is thus carried along, so that he knows intuitively the position of the cylinder, and has no reason, ordinarily, to use his eyes and ears for purposes inside the cab. There is a reversing-switch, which is automatically locked in all but the "off" position on the main cylinder, thus preventing reversal under wrong conditions. There are

ammeters, voltmeters, a whistle, bell, headlights, and the usual accessories. The system of brakes is that known as the "American," and is applied to every wheel. The controlling apparatus is all carried in the cab, which is centrally mounted, has wedge-shaped ends and forward inclined sections running down to each end of the locomotive. The cab is heavily framed, so as to carry two trolleys, the ends are narrowed, and hand-rails flank it on either side.

The cab is provided with seats on either side, and the controlling apparatus is so arranged that the engineman sits at the right side looking forward, no matter which way he is running, and has similar hand movement. Steps give access to the pilot platforms at either end, and ladders to the top of the cab. The total weight of the locomotive is about 134,000 pounds, equally distributed on the drivers.

THE HEILMANN ELECTRIC LOCOMOTIVE.

The Heilmann electric locomotive, which was tried in January on the Havre section of the Chemin de Fer de l'Ouest in France, is a wide departure from the usual methods of electric traction. The system consists of a locomotive which carries a boiler and engine to furnish power to an electric generator, which supplies current to gearless motors on the eight axles of the locomotive.

It is claimed that by this method of driving a greater stability or smoothness over the steam locomotive is attained at high speeds, due to the smaller wheels that can be used at a greater number of revo-

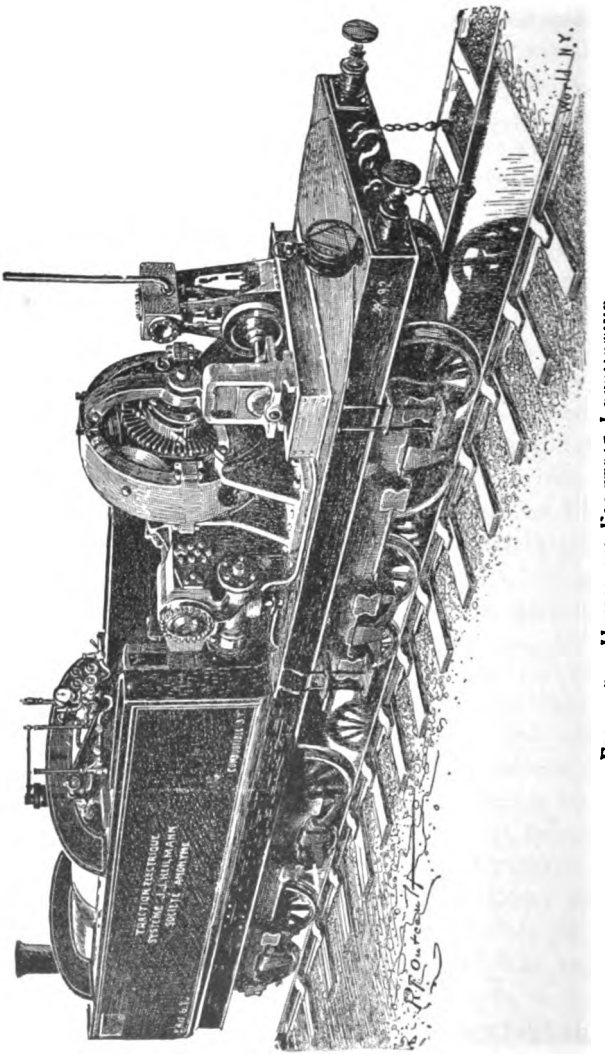

FIG 357.—HEILMANN ELECTRIC LOCOMOTIVE.

lutions and the absence of oscillations. The adherence and flexibility are greater, as a greater weight can be distributed and in a more advantageous manner with sixteen wheels than with four, to which the steam locomotive is limited in order to possess sufficient flexibility to round curves. The boiler capacity in the new system can be made much larger, and by the use of economical engines power can be supplied more cheaply even at the points of final application than with wasteful locomotive engines. Accessory advantages claimed are that all parts of the machinery requiring attention are readily accessible and as directly under the eye of the attendant as the machinery of a steamship; the analogy is further carried out by the fire-room and machinery being entirely separated. The lubrication is more efficient and easily attended to, and the track is subjected to lighter wear on account of the absence of the "pounding" incident to the use of steam locomotives.

The locomotive is 52 feet long between buffers, and supported by two trucks with four axles each, with an electric motor on each axle; the entire weight is 110 tons.

The boiler is of the marine locomotive type with a corrugated furnace. It is 26 feet in length and somewhat over 6 feet in diameter, with 1550 square feet of heating-surface; the pressure is 160 pounds. A coal-bunker and water-tank of 6 and 10 tons capacity respectively are placed on each side of the boiler. The engine is of the compound type, the high- and low-pressure cylinders being on opposite sides of the cranks, which are at an angle of 180 degrees. Its

weight is 11,000 pounds, or 20 pounds per effective horse-power. The consumption of steam is 23 pounds per horse-power hour.

The engine is direct-connected to a 6-pole, ring-armature (see Fig. 357), continuous-current dynamo, which is so wound as to work with three, two, or even one pair of carbon brushes. The external diameter of

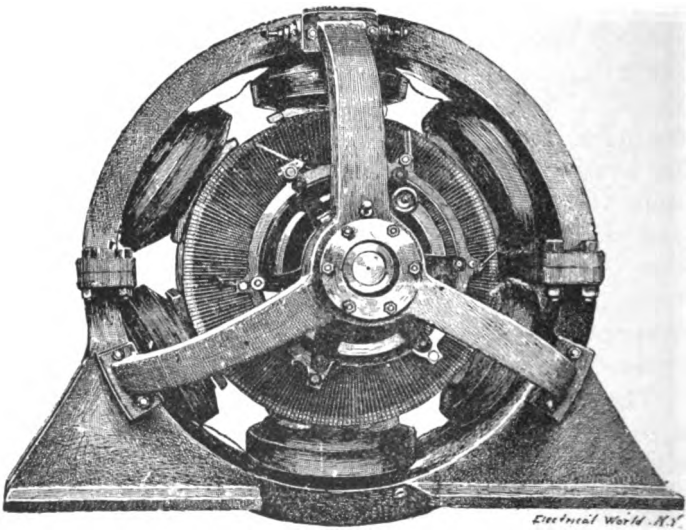

FIG. 358.—GENERATOR OF HEILMANN LOCOMOTIVE.

the frame is 79 inches and of the armature 49 inches. The dynamo is separately excited by a compound dynamo run by a small engine, and with 360 revolutions produces an available horse-power of 600, with a maximum horse-power of 800 with 800 revolutions. If the dynamo stops at one of the engine dead-points

the exciter is connected to the armature for an instant, which causes the former to work as a motor, and carry the engine beyond the dead point.

The motors have four poles and steel frames cast in a single piece. The toothed armature is 25 inches in

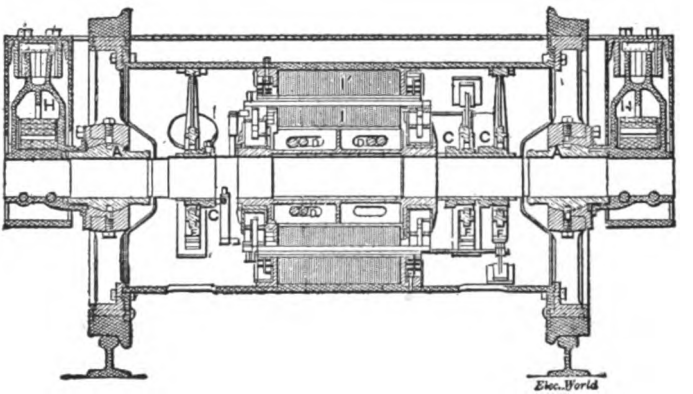

FIG. 359.—MOTOR OF HEILMANN LOCOMOTIVE.

diameter, with a large air-gap to reduce eddy currents. It is mounted on a steel tube, supporting the whole weight, which is fitted on the axle with a bushing of woodite, an elastic insulating material impervious to oil. The steel tube terminates at one of its extremities in an elastic coupling, which prevents jerking in starting. The eight motors form two groups, each comprising four motors coupled in parallel. In starting the two groups are connected in series and then in parallel after a certain speed has been attained.

These motors are of the iron-clad type, as shown in Fig. 359, a cross-section of a motor. In Fig. 360 it

will be seen that the method of mounting the motors is different. In this case the fields are carried by a cross

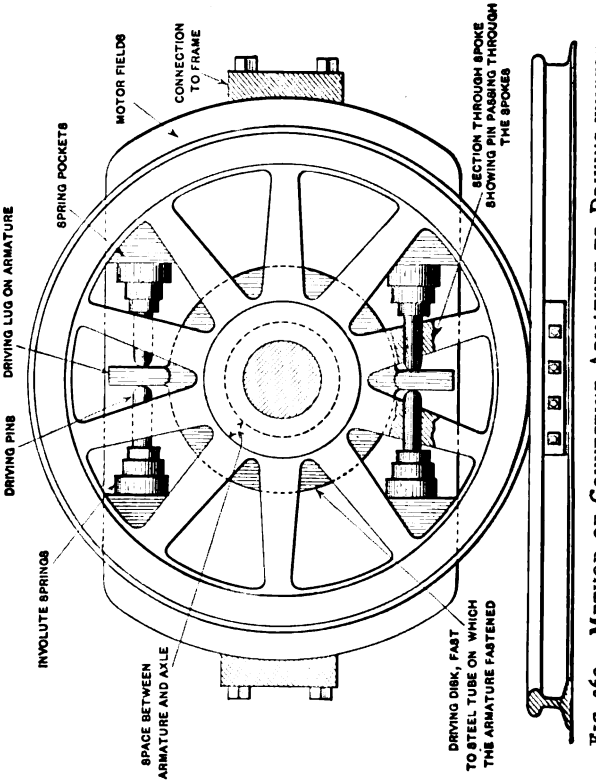
MOTOR FIELDS
CONNECTION TO FRAME
SECTION THROUGH SPOKE SHOWING PIN PASSING THROUGH THE SPOKES
SPRING POCKETS
DRIVING LUG ON ARMATURE
DRIVING PINS
INVOLUTE SPRINGS
SPACE BETWEEN ARMATURE AND AXLE
DRIVING DISK, FAST TO STEEL TUBE ON WHICH THE ARMATURE FASTENED

FIG. 360.—METHOD OF CONNECTING ARMATURE TO DRIVING-WHEELS. HEILMANN ELECTRIC LOCOMOTIVE.

connection from each side of the frames. The armature is mounted on the axle by a steel tube, which is

larger in diameter than the axle proper. This is for the purpose of allowing for oscillation of the frame or axle. In order to start the motors without a jerk there are driving-pins fit through spokes in the wheels which have heavy involute springs attached to them. These pins bear against a lug which is attached to a disk connected to the armature, so that in any position the armature may drive the wheels and still run true with the bore of the pole-pieces.

REGULATION.

As the motor fields must have a fair degree of saturation to prevent sparking when the locomotive is running and pulling no train, it will be evident that under all operating conditions the motor fields are constant and fully saturated, which makes them entirely sparkless. The fields of the generator is separately excited by means of a small auxiliary engine and constant-potential dynamo which supplies the electric light. The main engine has a fixed cut-off at the most economical point at one-fourth stroke, and the speed is adjusted by the throttle. The engine varies in speed from 50 to 500 revolutions, and the strength of the generator from zero to the maximum strength. Steam is used expansively at a fixed cut-off. In starting an almost unlimited torque is secured by gradually increasing the generator field strength and speed, which sends a current through the motors rising smoothly from zero to the current sufficient to start the motor armature. If the field-controller and throttle are left in this initial position, the train will

start smoothly, and will continue to move slowly, using the full current strength, but producing the current with about 50 volts, or one tenth of the full voltage, and producing the power about $\frac{1}{10}$ of that required at full speed by a steam-engine using steam expansively instead of as in a steam locomotive using steam full stroke. In order to increase the speed of the train the field-controller and throttle of the engine are manipulated until the engine is driving the generator at full speedin a field of full strength.

This, then, being the full power of the locomotive when a grade is reached which requires three times the former torque, the field is weakened to one third of its full strength. Then the train will move up the grade at one third of the full speed on the level, while using the same power as was required on the level. Under this method of control the electrical energy is used in such a way that its voltage is varied in proportion to the speed desired, and the ampères in proportion to the torque required.

Weight of locomotive, 114 long tons, about 15,000 pounds on each driver; draw-bar power, 50,000 pounds. A load of 90 tons was hauled up gradients of 3 and 8 in 1000 respectively, at a speed of 50 miles per hour in the former case, and in the latter 38 miles per hour.

ALTERNATING-CURRENT LOCOMOTION.

In writing the direct-current motor has only been dealt with, as that class is the most used and developed. There is another current, called the alternating current, which promises to develop into commercial value

as a motive power. It has this advantage: that it can be varied at will by a transformer. A large current of small voltage can be transformed to a small current of high voltage or pressure, and for long-distance transmission it is better adapted than the direct current, as it can be conveyed a great distance with a smaller wire than a direct current, because a small current of high voltage can be passed over the wire and then transformed to the desired current and pressure.

The following description is of an alternating system, and it will be seen that the current that is used in the motors that run the locomotives is a direct current in the end:

How Shall We Operate an Electric Railway Extending One Hundred Miles from the Power-station?*

BY H. WARD LEONARD.

Let us suppose that we are called upon to act as engineers for a steam railway desiring to operate its line by electric locomotives. There exists a very economical source of power, possibly a water-power, so situated that the length of railway to be operated in either direction is one hundred miles.

Let us determine the leading points of the specification for such a road based upon our experience to this date, and after making the specification let us see whether we are to-day able to comply with the specification, and if not what must be done before we can comply with it.

---

* Read before the American Institute of Electrical Engineers, February 21, 1894.

The following features seem desirable, if not essential, in such a railway:

1. A single trolley contact shall be used for supplying current to the locomotive.

2. The electro-motive force upon the trolley shall not exceed 500 volts.

3. There shall be no apparatus in motion and requiring attention between the power-station and the locomotive.

4. No commutator, rheostat, or controlling device on the locomotive shall be subjected to a higher electro-motive force than 250 volts, and there shall be no sparking on any of the apparatus under any normal conditions.

5. The entire control of the locomotive in either direction shall be effected by the movement of one lever.

6. The load shall be started from dead rest by an amount of energy taken from the source of supply, which shall not exceed one quarter of the energy required to operate at full speed on the level.

7. The retardation of the load in coming down grades, and in stopping, shall be effected by converting the motors into generators, which shall feed back current to the line, and thereby assist the power-stations in operating other locomotives.

8. The motor must be reversible when operating at full speed, without damage to the motors or other apparatus.

9. The efficiency of the system from power on the generator-shaft to the draw-bar pull of the locomotive shall be at least 50 per cent.

10. The locomotive shall produce at least 500 horse-power when operating at a speed of 80 miles per hour.

It will be evident that we must use a high electro-motive force for operating over such great distances. The average distance over which the power is to be transmitted is 50 miles, and we find that in order to operate with a loss in conductors of 20 per cent we must have an initial electro-motive force of 20,000 volts, in order to make the cost of copper about $20 per kilowatt, which is about the best figure for cost of copper under the conditions.

The alternating current must evidently be used for such an electro-motive force as this, and the single-phase alternating, since we have but one trolley contact.

Let us start (see Fig. 361) with the standard 1000-volt single-phase alternators in our power-station, and convert by step-up transformers from 1000 to 20,000 volts required for the transmission-circuit. Since we are limited to 500 volts upon the trolley, we must insert at suitable points, say every two miles, a converter, which will transform the energy at 20,000 volts in the transmission-circuit to energy at 500 volts in the trolley-circuit, one pole of which latter circuit will be the rails.

We have our energy delivered at our point of use with reasonable cost and efficiency and by simple and well-tried apparatus. But the energy is in the form of a single-phase alternating current which is not very flexible.

We can operate a synchronous alternating-current motor by this current, but it cannot be regulated in

speed or reversed in direction, and cannot be started under load, and will be thrown out of step if a large load be suddenly applied. As all of these conditions are required of locomotives, a motor operating by the alternating current evidently cannot be used directly.

But it is a simple matter to start the synchronous motor without load, and when it reaches its synchronous speed it will perform work efficiently and satisfactorily, provided it be not subjected to violent fluctuations in the load applied to it.

Evidently, then, what we need is some form of gearing between the synchronous motor and the axle which will give us the desired control and enable us to operate at any speed and in either direction.

It is quite possible that this can be accomplished mechanically, and many ingenious devices for this purpose have been invented, but none seems to be sufficiently simple, reliable, and lasting for use on such a large scale.

The equivalent of such a mechanical gear can, however, be secured if we will make use of the synchronous motor merely to drive a continuous-current generator on the same shaft at a constant speed, and use the continuous current so generated to supply the propelling motors connected with the axles of the locomotives.

Since the generator is used for the motors on one particular locomotive only, we can vary its electromotive force at pleasure, and hence can produce a low electro-motive force for low speeds, and increase the electro-motive force to increase the speed, and by this means avoid the loss of energy which is wasted in

rheostats when motors are started under load, and when connected as usual upon a source of constant electro-motive force.

In order to secure rapid changes in the electro-motive force of this continuous-current generator at will it will be best to have its field separately excited, which will also enable us to reverse its field at pleasure. The propelling motors can be series, shunt, or separately excited. The best results will be obtained by separately exciting the field, and keeping it fully and constantly excited, and reversing the motors by reversing the field of the generator, which of course will reverse the current in the armature alone of the motor.

To secure this exciting current for the synchronous alternating motor, and also for the fields of the continuous-current generator and motor, it will be best to drive by means of the alternating-motor armature, and if desired in the same field a continuous-current winding connected to a commutator, from which will be led the current for exciting the fields of all three machines.

Let us wind the fields for 250 volts, and also use this voltage for the continuous-current armatures. This pressure is perfectly safe and can be handled with impunity.

Suppose now the locomotive to be at rest. The synchronous motor is running and driving the generator armature at full speed in a field of no intensity, hence the propelling motors receive no current. We now make the first contact upon the rheostat in the generator field-circuit and let the resistance in the rheostat be such as to produce say 25 volts at the generator-brushes.

This 25 volts will supply a very large current to the motor armature at rest in its saturated field, and consequently will produce a sufficient torque to start the entire load and continue to move it at a slow speed.

We are using 25 volts and let us say 2500 ampères in this circuit; this means 62,500 watts, and, disregarding transformation losses for simplicity, this means a current of 125 ampères from the trolley. When operating at the rate of 500 horse-power at full speed, we shall need say 1800 ampères and 250 volts in our propelling circuit, which is 450 kilowatts, and means roughly 900 ampères from the trolley. It is evident, therefore, that we can start the load with but a small fraction of the energy required for operation at full speed, and that there will be no danger of throwing the alternator out of step by applying but about one sixth of its full load and applying that gradually, as will be the case, as the load will follow the increase of the generator field strength, which, although rapid, is gradual, and not instantaneous.

If we are operating at full speed, and desire to bring the locomotive to rest, we gradually but rapidly reduce the strength of the generator field by manipulating the rheostat in its field-circuit so as to reduce to zero the current exciting this field; the electro-motive force produced by the generator then rapidly falls below the counter-electro-motive force of the motors, which are being driven in a constant field by the momentum of the moving load, and the motors consequently become generators, and supply current to the former generator, which now becomes a motor, and, driving the alternator, feeds current back through the trolley,

thereby not only bringing the locomotive smoothly and rapidly to rest, but saving the energy usually wasted upon the brake-shoes.

Under this arrangement, if we are using steam-engines as the source of power, we never subject the engines to the violent fluctuations ordinarily met with in electric railways, and by reason of having a comparatively steady load can secure very high economy in the consumption of steam; and since we have eliminated the excessive load in starting, we can very much reduce the capacity of the engines, generators, and conductors over usual requirements.

The reversal of the motors is very simple and smooth by this method. The lever of the rheostat in the generator field-circuit is moved so as first to reduce the current to zero, and then increase it again to its maximum, but in the opposite direction around the field. The reversal of the motor armature, following the gradual change in the strength of the generator field, is extremely smooth, and the armature is not subjected to any sudden strain. No sparking will be met with under any condition, upon either the generator or motor commutators, or upon the field-rheostat.

DRUM-ARMATURE.

It is well now to make further statement in regard to drum-armatures, as these are the armatures mostly used in motors. The armature-core is made up of disks of soft iron rigidly fastened to the shaft. These disks are insulated one from the other as in the ring-armature (Fig. 322). The winding is over the surface of this core from end to end. The motor

armature as now made is slotted, and the wire laid in the grooves. This is of great importance, as it keeps the wire from being drawn or twisted on the core. Fig. 346 shows a drum-armature complete. Its

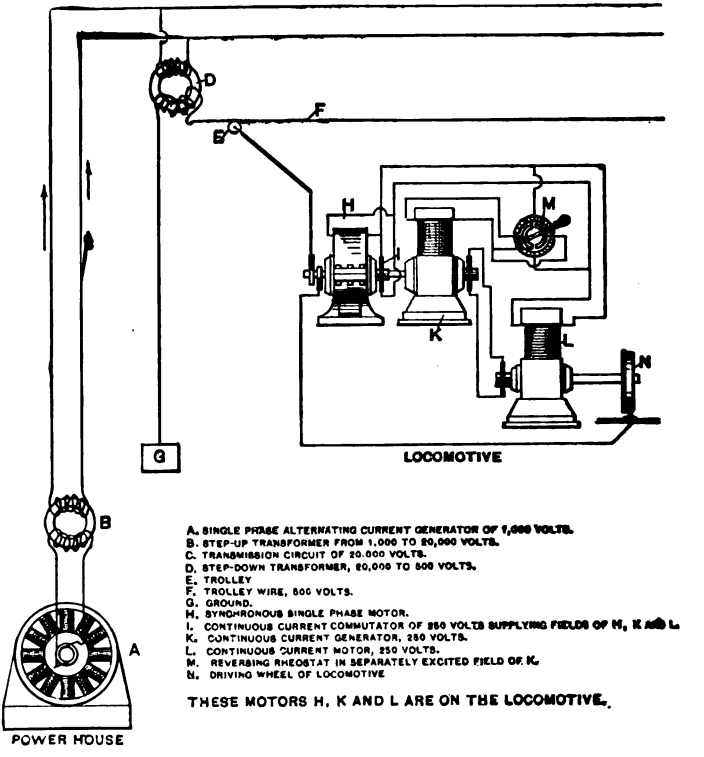
D
F
E
H
M
K
L
N
G
LOCOMOTIVE
B
A
POWER HOUSE
A. SINGLE PHASE ALTERNATING CURRENT GENERATOR OF 1,000 VOLTS.
B. STEP-UP TRANSFORMER FROM 1,000 TO 20,000 VOLTS.
C. TRANSMISSION CIRCUIT OF 20,000 VOLTS.
D. STEP-DOWN TRANSFORMER, 20,000 TO 500 VOLTS.
E. TROLLEY
F. TROLLEY WIRE, 500 VOLTS.
G. GROUND.
H. SYNCHRONOUS SINGLE PHASE MOTOR.
I. CONTINUOUS CURRENT COMMUTATOR OF 250 VOLTS SUPPLYING FIELDS OF H, K AND L.
K. CONTINUOUS CURRENT GENERATOR, 250 VOLTS.
L. CONTINUOUS CURRENT MOTOR, 250 VOLTS.
M. REVERSING RHEOSTAT IN SEPARATELY EXCITED FIELD OF K.
N. DRIVING WHEEL OF LOCOMOTIVE
THESE MOTORS H, K AND L ARE ON THE LOCOMOTIVE.

FIG. 361.—METHOD OF OPERATING ELECTRIC LOCOMOTIVE ON A ROAD ONE HUNDRED MILES LONG.

merits are these: The armature can be made very long in proportion to its diameter, and the amount of dead wire is reduced to minimum, where with the

ring-armature the wire on the inner side is of no practical value except to convey the current, that is, in regard to cutting lines of force.

The poles in a drum-armature are formed the same as in a ring-armature, and are attracted the same as a ring-armature. The current also passes two ways around the armature. The winding is cross-connected on the ends in various ways. The standard motor armatures have their coils wound on formers and insulated. Then all that is required is for the armature-winder to place the formed coils in their respective slots around the core, and then connect them up to the commutator, there being details in the way of binding, heading, and other minor details.

METHOD OF CALCULATING FOR A MOTOR OF A GIVEN H. P.

In the general method of designing a motor of a given power and speed it is well known that a dynamo will run as a motor, so that calculations for a motor are based on the same principles as applied to a dynamo. If it is desired to construct a motor of, say, 10 H. P. to run at 500 revolutions at 200 volts as an example. The motor if run as a dynamo should be able to generate a current of 7460 watts; as 1 H. P. = 746 watts, 10 H. P. = 7460 watts as the required output. A motor to give out 7460 watts must be allowed to absorb 8776 watts, and if its electrical efficiency is to be 90 per cent it must generate 180 volts. Dividing 8776 watts by 180 volts, we find 48.75 ampères as the current it must take at normal load. Then if the motor is designed

so with powerful field-magnets, and is capable of generating a current of 50 ampères at 180 volts at a speed of 500 revolutions, it will be a 10 H. P. motor.

METHOD OF DESIGNING A MOTOR TO RUN ON A CIRCUIT OF A CERTAIN POTENTIAL OR VOLTAGE.

Suppose it is desired to construct a motor to run on a circuit of 50 volts with a current of 1 ampère. This means if run as a motor it should be able to give out 1 ampère of current at 50 volts pressure. To obtain this voltage about fifty yards of wire must be used on the armature. This is allowing one yard per volt generated, and it will be found in referring to a wire table that about half a pound of wire will answer the requirements. As to the field-magnets, they must be worked with about five pounds of 24 wire, and, connected in series with the armature, will give a total resistance of 49.5 ohms with a voltage of 50 volts. As the resistance of 24 wire to the pound is 9 ohms, then five and a half pounds gives 49.5 ohms. Then, according to Ohm's law, current = E. M. F. divided by resistance = $50 \div 49.5 = 1$ ampère, approximately.

ELECTRICAL UNITS.

AMPÈRE.

The practical unit of electrical current strength. It is the measure of the current produced by an electro-motive force of one volt through the resistance of one ohm in electric quantity is at the rate of one coulomb per second. Its best analogy is derived from water. Assuming the electric current to be represented by a current of water, the pressure-head or descent producing such current would be the electro-motive force. The current might be measured in gallons or other units per second. In analogy these gallons would be coulombs.

AMPÈRE-SECOND.

is a coulomb. The number of coulombs passed per second gives the ampères of current.

AMPÈRE-MINUTE.

The quantity of electricity passed by a current of one ampère in one minute as sixty coulombs.

AMPÈRE-HOUR.

The quantity of electricity passed by a current of one ampère in one hour.

THE VOLT.

The practical unit of electro-motive force or potential difference. An electro-motive force of one volt

will cause a current of ampère to flow through a resistance of one ohm. The rate of cutting 100,000,000 lines of force per second by a conductor produces one volt of E. M. F.

WATT.

The practical unit of electric activity, rate of work or rate of energy. It is the rate of work done by a current of one ampère urged by one volt E. M. F., as 746 watts equal to one electrical H. P., as 50 × 10 ampères = 500 watts.

KILOWATT.

The kilowatt is a unit of 1000 watts; a machine of 15,000 watts output = 15 k.w's, or 15,000 watts ÷ 746 watts = 20 H. P., approximately.

AIR-BRAKES ON ELECTRIC LOCOMOTIVES.

Means for stopping an electric locomotive must be provided as with the steam locomotive. The question naturally arises: How can the air be compressed on an electric locomotive if there is no steam?

This is very easily overcome. Instead of using a compressor-pump driven by steam the compressor is operated by electricity. Fig. 362 shows a compressor complete, and on a locomotive, as shown on the left-hand side, is a small iron-clad electric motor. Fastened to the armature-shaft is a small pinion, which meshes in a gear-wheel of larger diameter. These gears are enclosed in a case, as shown by the drawing, which

case is under the compressor-cylinder. Projecting from the gear-case under the cylinder are two cranks. These cranks are driven by the gears. Leading from

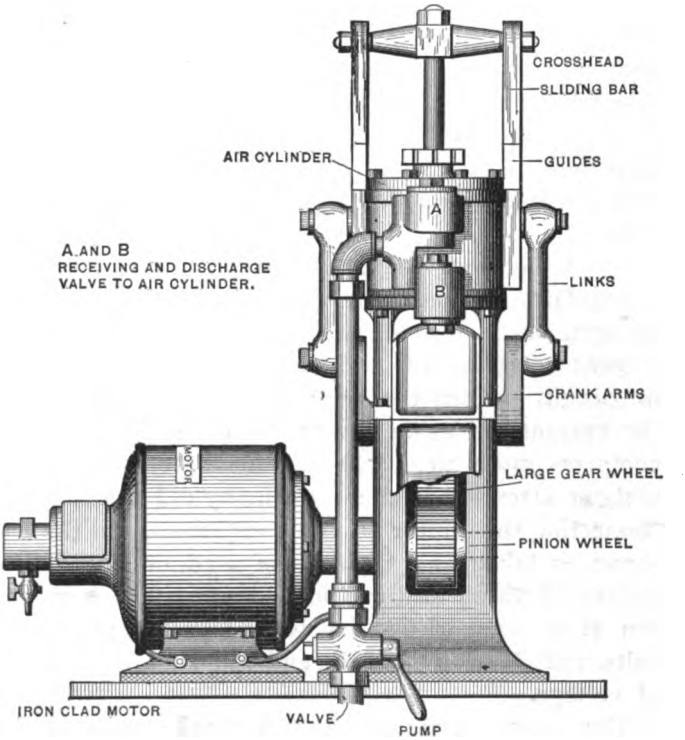

FIG. 362.—ELECTRIC-DRIVEN AIR-COMPRESSOR FOR ELECTRIC LOCOMOTIVE.

these cranks are two rods, whose upper ends are attached to sliding blocks on each side of compressor-cylinder. There is a cross-bar or head attached to these

two sliding blocks. To the cross-head is fastened the piston-rod of the compressor, which enters the cylinder driving the piston-head. The operation then is simple. The motor armature rotating drives the gears which operate the crank-arms, which cause the piston-head to draw in and compress the air into a reservoir. There is provided suitable receiving- and discharge-valves in the air-cylinder, as all steam air-compressors have an automatic governor to stop them when a certain predetermined pressure is reached in the reservoir.

So is the electric-driven compressor provided with a regulator. When the air-pressure becomes great enough, or as desired, the motor is stopped by the current being cut off and a suitable resistance thrown in circuit. When the pressure falls from any cause the current will again flow to the motor, causing it to compress more air. This is done automatically and without attention. There are many different ways of connecting the motor to the compressor, and the one shown is taken as a typical one used on the Metropolitan Elevated Railroad in Chicago. These motors run at a speed of 650 revolutions per minute on 450 volts, and develop $3\frac{1}{2}$ H. P., and will stand an increase of voltage.

The space occupied is $15\frac{1}{8} \times 30\frac{1}{2}$; weight, 400 pounds. The regular standard air-brake systems are used in connection with this compressor, such as the Westinghouse and New York air-brakes, of which a full description is given in the chapter under that head in this book.

CONTROLLER COMBINATIONS.

(Pages 437-439. 1 to 10.)

1. All resistance in, motors in series.
2. One half resistance out, motors in series.
3. All resistance " , " " "
4. All resistance in, series with one motor.
5. One half resistance in, series with one motor.
6. All resistance out, one motor in circuit alone.
7. One half resistance in, circuit with one motor cut out.
8. Motors in parallel, all resistance in.
9. Motors in parallel with half resistance in.
10. Motors in parallel with all resistance out.

HEILMANN ELECTRIC LOCOMOTIVE.
LATEST TYPE. (Fig. 363.)

After the trial of the first electric locomotive of which a description is given in the early part of the chapter, two new ones were built, having improvements which were suggested by the tests given the first. A description of these will be instructive from the fact that it shows the efforts being put forth to put the electric locomotive on the same footing as the steam locomotive. These new locomotives have eight pairs of drivers, as shown in elevation view. An electric motor is mounted on each pair of drivers. These drivers are divided four pair to each truck as shown in Figs. 364, 365. The drivers are not mechanically connected in any way, which is an advantage over the steam locomotive. Resting upon two pivots, one at the centre of each truck, is a rigid platform made of steel beams. This platform or framing carries the boiler, steam-engine, and dynamos.

The steam-engine, supplied by the boiler, runs continuously. The engines are Willans centre-valve, triple-expansion, vertical type. The crank-shaft has six cranks, so set as to produce the most perfect balancing of the engine, so it will not cause any vibration. The full speed of the engines is 450 revolutions per minute. Fig. 366 shows a cross-section view of a Willans triple-expansion engine, of which the following is a description:

This engine is intended as a high-speed engine and makes from 450 to 550 revolutions per minute. The engines are single-acting, that is, steam acts upon the piston only during the down stroke, the up stroke

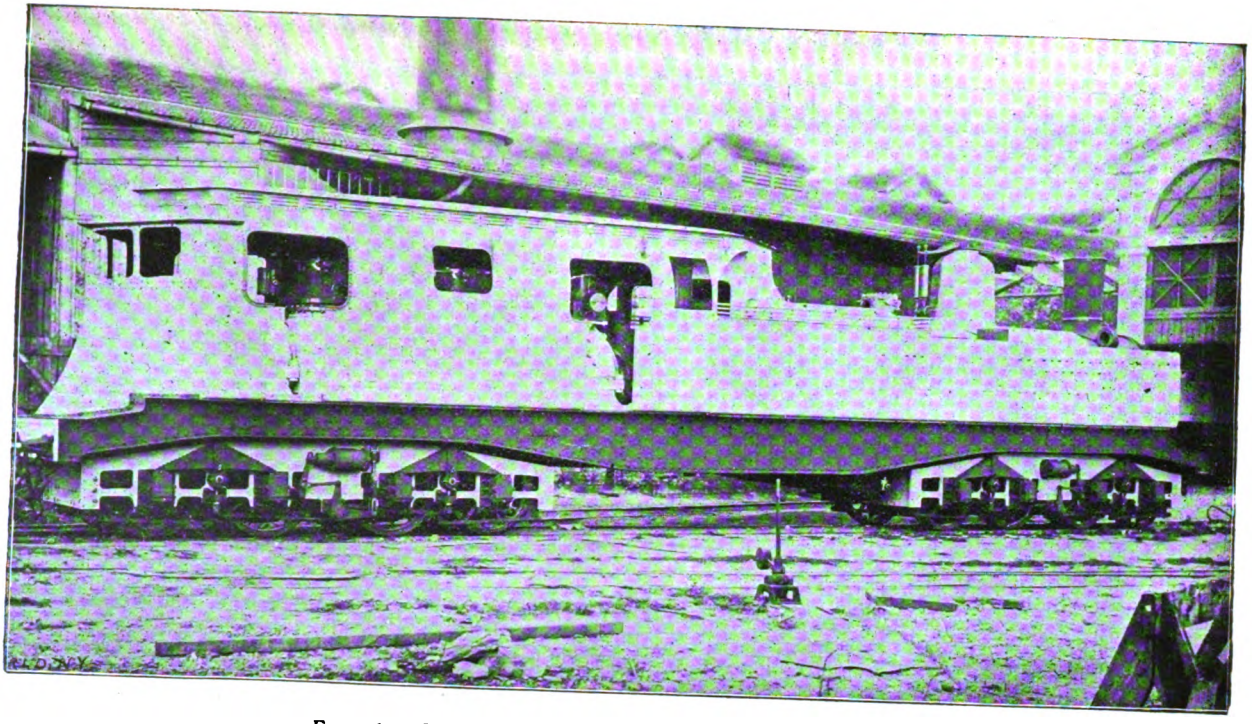

FIG. 363.—HEILMANN ELECTRIC LOCOMOTIVE. Latest type.

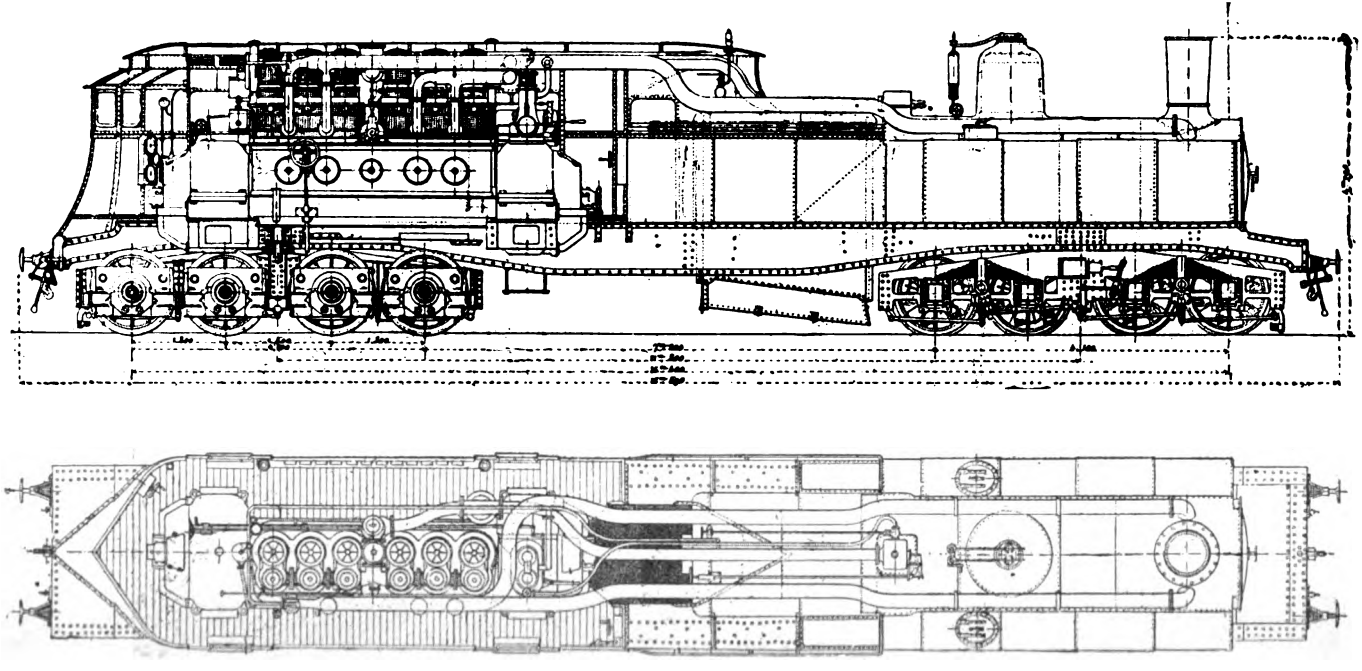

FIG. 364. ELEVATION AND PLAN VIEW, HEILMANN ELECTRIC LOCOMOTIVE.

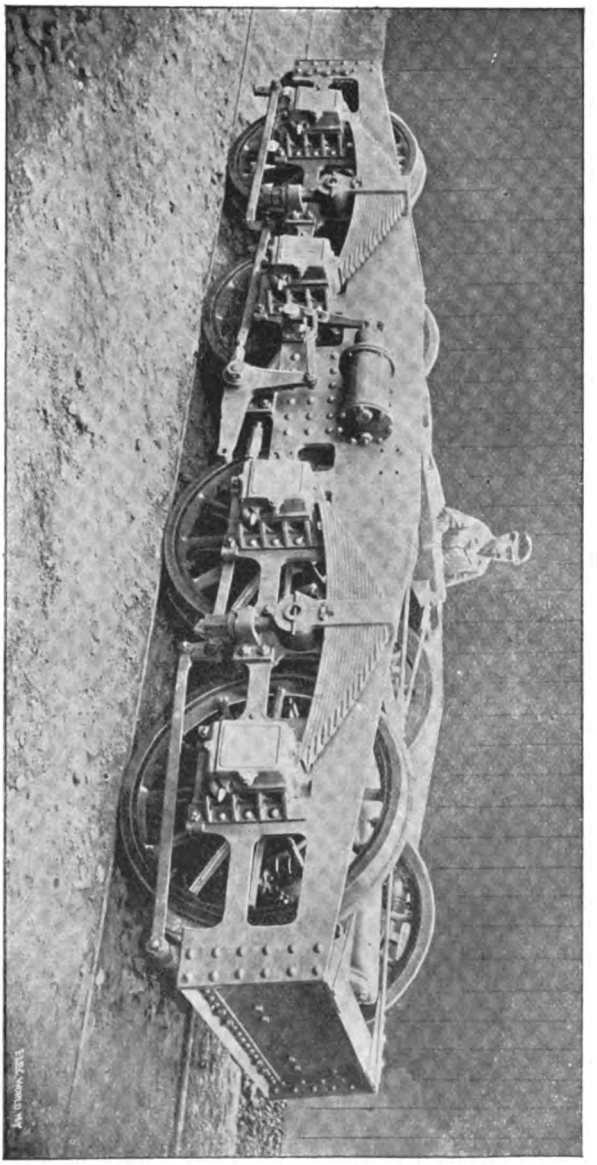

FIG. 355.—VIEW OF TRUCKS, HEILMANN LOCOMOTIVE.

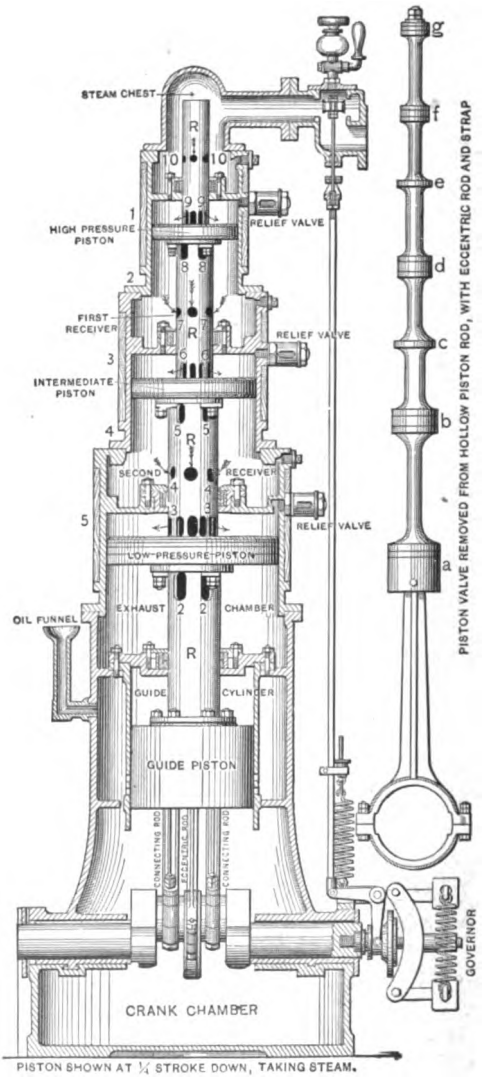

FIG. 366.—WILLANS TRIPLE-EXPANSION ENGINE.

being made by the momentum of fly-wheel against an air-cushion in the lowest cylinder. When used as a single engine, but when more than one set of cylinders are used as in the Heilmann locomotive, the cranks are set so that when one set of pistons are going up the other set are pushing down. This makes a very smooth-running and durable engine, having very little wear on bearings and piston-rings.

The crank-shaft revolves in a chamber filled to a certain extent with oil mixed with water, which splashes it in a fine spray over the rods and movable parts. The main bearings are constantly flooded with oil. The engine is arranged with high-pressure cylinders above the intermediate cylinder, and with the latter above the low-pressure. The rod *R* is of large diameter and is hollow, and the valve for admitting and exhausting the steam from the several cylinders works up and down inside of it in the centre of the engine; hence the name central valve. A separate view of the valve is given in Fig. 366. It is driven in the usual way by an eccentric; but since the valve-seat on the inner surface of the hollow rod moves up and down with the pistons, the source of the valve motion, the eccentric must move up and down with the pistons also. This is effected by mounting the eccentric on the crank-pin instead of the crank-shaft as usual. The ports through which steam enters and leaves the respective cylinders are simply holes in the hollow rod shown at 9 9, 6 6, and 3 3. These are exposed alternately to steam coming from above through the rod and to exhaust also through the rod downward according as the corresponding pistons of the valves marked *f*, *d*, and *b* pass below the holes or above them.

Steam enters at the top through the governor throttle-valve, shown in section, into the steam-chest.

The top of the hollow rod, though uncovered, is closed against the steam-pressure by the uppermost piston *g* of the valve, which works in the part above the holes 10 10. Steam can therefore enter the rod when holes 10 10 are in steam-chest, as they are when the high-pressure piston is near the upper part of its travel. On commencing the down stroke *f* is just passing below the holes *e e*, and therefore admits steam into the first or high-pressure cylinder by way of 10 10 and 9 9. *f* rises again and closes the ports 9 9 when the piston has descended about three quarters of its stroke; but cut-off is effected earlier than this by the holes 10 10 leaving the steam-chest and passing through the gland in the cylinder-cover, thus losing their supply of steam. It is evident that cut-off may be made to take place at any part of the stroke merely by making the holes 10 10 higher or lower in the rod. The lower they are the earlier in the stroke will they leave the steam-chest. The same effect is produced by altering the height of the gland in cylinder-cover. After cut-off the steam acts expansively on the high-pressure-cylinder piston in the usual way. By the time the piston has reached the bottom of its stroke the piston-valve *f* has passed above ports *e e*, and as the valve *e*, Fig. 366, permanently closes the passage between 8 8 and 7 7, a way is opened from above the high-pressure piston through *e e* and out again by 8 8 into the space below the piston and marked "first receiver." During the up stroke steam is merely transferred, practically without change of volume or pressure, into the re-

ceiver. The receiver might be open to the atmosphere, so as to allow the steam to escape at once, the two lower cylinders with their pistons and valves being omitted. In that case the cycle would be already complete, and in fact the above description would be all the description needed for a Willans simple engine such as would be used where only low-pressure steam was available.

In the present engines, however, the receiver, which is partly composed of the lower end of high-pressure cylinder, forms also the steam-chest for another cylinder, which in a compound engine would be the last of a series of two, but which here is the second of three. At the beginning of the succeeding down-stroke steam passes from the receiver by the holes 7 7 into hollow rod again and out by 6 6 into the intermediate cylinder, until cut-off occurs by the descent of the holes 7 7 through the cylinder-cover. On the stroke the steam exhausts, just as described above, through 6 6 and 5 5 into the second receiver; in the next downward stroke it passes into the low-pressure cylinder through 4 4 and 3 3; in the next up stroke it is transferred through 3 3 and 2 2 into exhaust chamber, which is in communication with the atmosphere; but it is not until the third revolution after that in which steam enters the high-pressure cylinder that it is finally expelled from the engines. It will be seen that the full pressure in the steam-chest is constantly acting on the valve-piston *g*. This insures that the eccentric-rod shall be kept constantly pressed against the eccentric as well on the up as on the down stroke.

With the steam-pistons the case is different. They are much heavier, and in the up stroke they are all in

equilibrium, for there is communication existing between the upper and lower sides of them. Means are provided to check their momentum on the up stroke, to keep the connecting-rod brasses in constant thrust. The guide which takes the side-thrust of the connecting-rod is in the form of a piston moving in a cylinder closed at the top. This is shown in Fig. 366.

At the bottom of its stroke it uncovers certain holes, *l l*, which place the guide-cylinder momentarily in communication with the atmosphere. As there is no other outlet from it, the upward movement compresses the air contained in the guide-cylinder, until at the top of the stroke a considerable pressure is reached, sufficient to stop the line of pistons without shock, or the upper brasses leaving the crank-pin. All piston-rods are packed by a cast-iron ring pressed inwardly instead of outwardly.

Attached to each end of the engine-shafts are two electric generators having six poles. These generators are electrically connected in parallel, and the combined output is 3000 amperes at 455 volts; also, for a short period, 4000 amperes can be generated. The field circuits of both these generators and the light-motors are separately excited by a two-cylinder Willans engine and a four-pole dynamo of 28 H.P. This exciter also supplies light for the train. Fig. 367 shows a view of the exciter and its engine. The eight motors each have a normal rated capacity of 125 horse-power at 62 miles per hour. Fig. 368 shows one of the motors and drivers, in which the upper half of the field-yoke is removed, showing the armature, commutator, and two end poles. The motors have four poles. The arma-

ture is mounted on a hollow sleeve through which the axle passes. This hollow sleeve has a spider attached which abuts against involute springs, as in Fig. 369, and

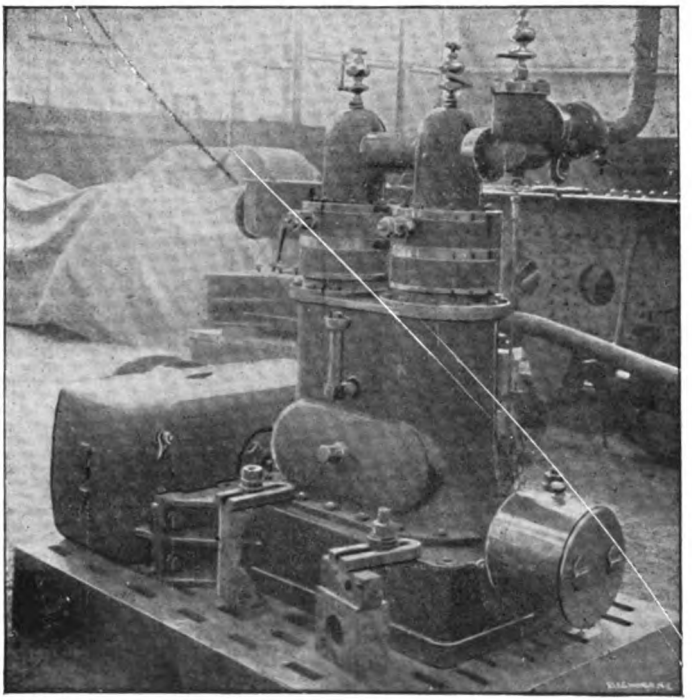

FIG. 367.—EXCITER AND ENGINE.

causes the driver to revolve. This forms a gearless or direct-driven motor. The motor armatures are all in multiple with each other, and across the terminals of the generators there is arranged a commutator in the circuit leading to the motor armatures by which

they can be grouped in two series of four each when it is desired to secure the greatest tractive force and slow

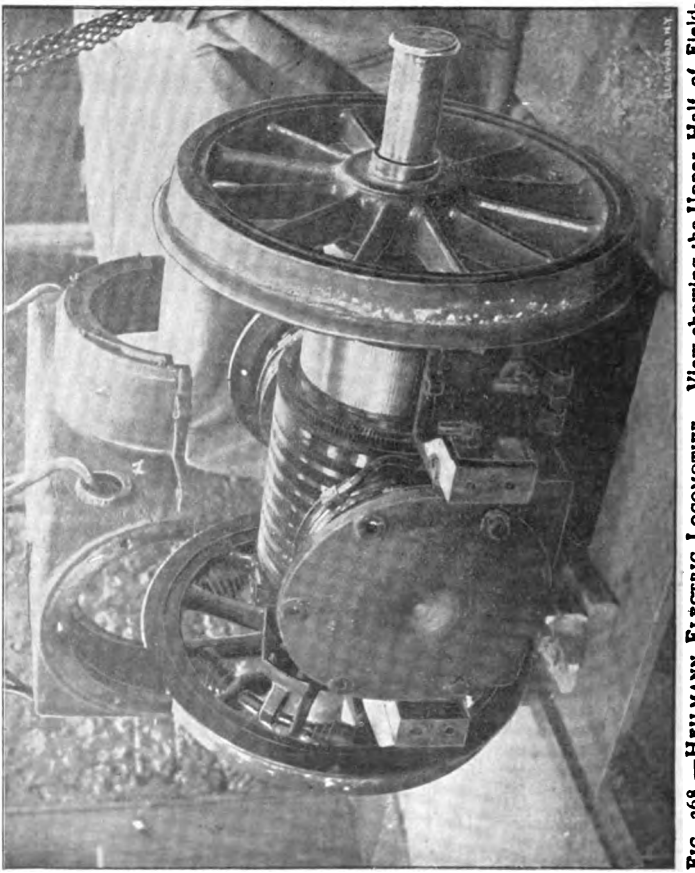

FIG. 368.—HEILMANN ELECTRIC LOCOMOTIVE. View showing the Upper Half of Field-yoke removed, exposing to view the Poles, Armature, and Commutator of Motor.

speed. There is also a reversing-switch in this armature circuit to reverse the direction of circuit through

the motors and change direction in which the locomotive travels. Fig. 370 shows method of wiring the motors and generators for changing direction of

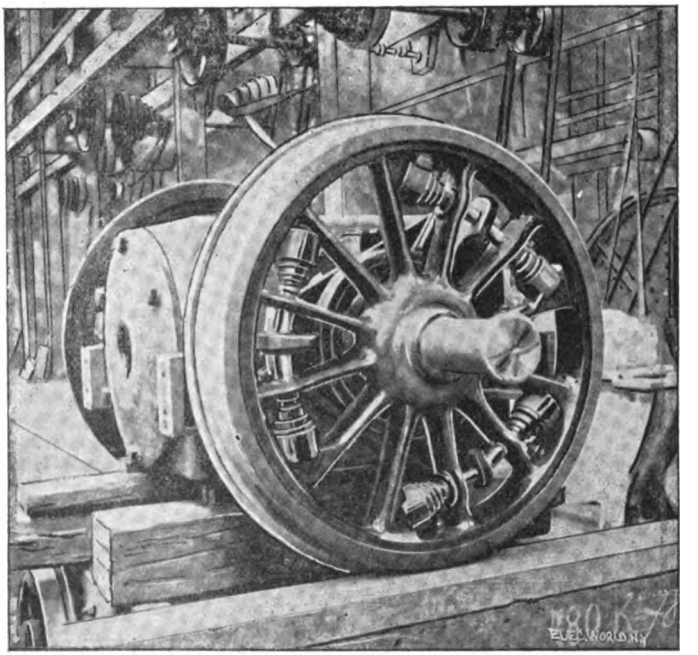

FIG. 369.—SHOWING THE METHOD OF CONNECTING THE SPIDER OF ARMATURE TO DRIVING-WHEELS.

motors by changing the direction of current through armature.* See Fig. 370 for direction of current, indicated by arrows, through one motor.

* The direction of current flowing through the No. 1 motor, as shown in Fig. 370, takes place in all the motors at the same time, as they are in parallel with each other across the circuit.

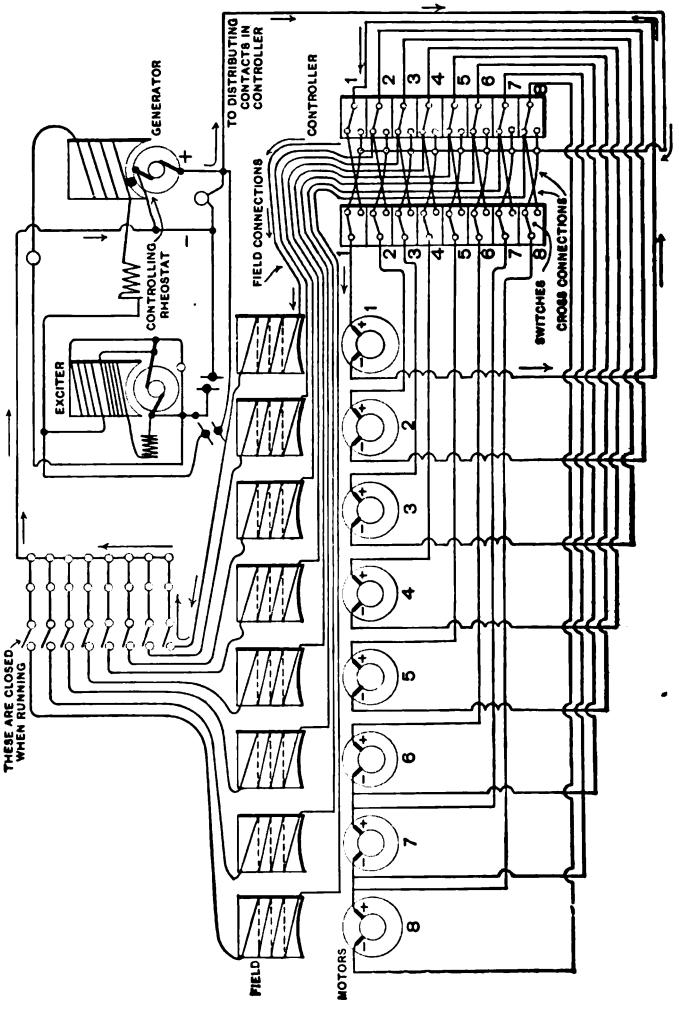

FIG. 370.—METHOD OF WIRING THE GENERATORS AND MOTORS, HEILMANN LOCOMOTIVE.

Fig. 364 is an elevation and plan of the latest type of Heilmann locomotive; the boiler is of the Belpaire type used on a great many steam-locomotives. This occupies the fore part of the locomotive and is carried over one set of trucks. The fire-box drops down between the girders. The principal dimensions are: Grate surface, 36 sq. ft.; heating surface of fire-box,

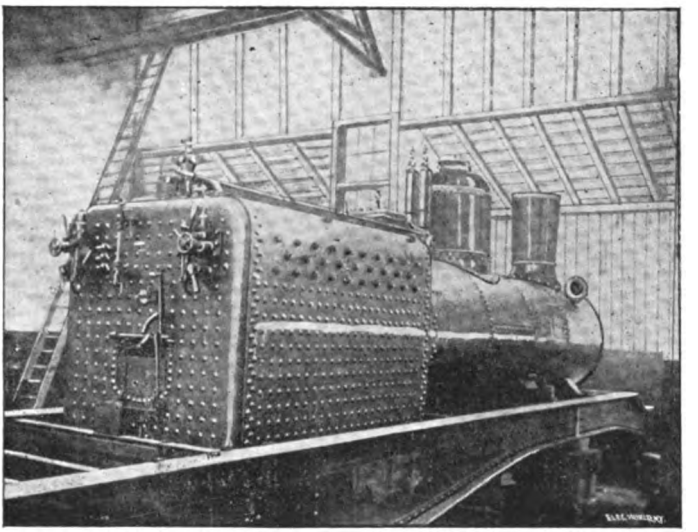

FIG. 371.—BOILER AS MOUNTED ON FRAME.

177 sq. ft.; heating surface of tubes, 1818 sq. ft.—total interior heating surface, 3245 sq. ft.; number of tubes,

By pushing the switches down to the other terminals on the controller on both sides the direction of current through cross-connection will be changed; consequently the direction of current through the armatures will be reversed, the fields remaining the same. The motors will reverse their direction.

351; diameter, 1.77 inches; length, 12.46 ft. head to head. The boiler has the usual steam-dome and safety-valves. On the rear end over the second set of trucks are carried the engines, generator, exciter, and controlling mechanism, steam-gauges, voltmeters and ammeters. The exhaust-steam pipes run from the engine forward to and enter the side of the smoke-box and then exhaust into the stack, as in the steam-locomotive. The steam-pipe connects to a small dome in the back of boiler and passes back between the exhaust-pipes to the stop-valve between the two groups of engines. A small steam-pipe also passes to the small exciting-engines. At the back of the engines is placed the air-pump, Westinghouse brake being used. This locomotive is arranged to run in either direction; one end is brought to a sharp point to deflect the wind as a ship cuts the water. Fig. 363 is a full view of the engine.

The principal dimensions of the Heilmann electric locomotive follow:

Length between buffers	52.12 feet
Total length of platform	50.5 "
Length of truck	13.45 "
Distance from centre to centre of axles between two trucks	31 "
Width of platform	8.8 "
Height of stack above rail	13.7 "
Diameter of driver	45.67 inches
Weight	115 tons
Horse-power developed at engine	1350

Fig. 369 is a view of one pair of drivers and motor, showing the involute spring and spider; Fig. 360 is a

diagrammic view of the same. Fig. 371 is a view of the boiler as mounted on the girder-frame. In describing this electric locomotive the idea is to show what effort is being put forth to try and perfect an electric locomotive which will generate its own power independent of a supply or central station, and making it an independent unit, as the steam-locomotive. As to whether it will ever be a competitor of the steam-locomotive will require a great deal of consideration and experimenting, although there is a field in which it would have its place.

ELECTRIC SWITCHING-LOCOMOTIVES FOR MINING COMPANIES AND FREIGHT.

The electric locomotive is coming into extensive use in mines, for the reason that it does not require any fire to operate it. In using steam-locomotives the smoke and steam are always a detriment, and although they have been used for years, a better method has been sought for. Compressed air is used also, and many engines are operated with air-pressure; this likewise does away with the fire and smoke in mines. Generally the engine must be very low, and the electric locomotive meets this requirement. It is thought proper to describe these locomotives, as they are in practical use and are in the same class of work as the switch-engine using steam. Fig. 372 shows a switching-engine for the Golden Sceptre Gold Mining Co., built by the Baldwin and the Westinghouse companies, which is a four-wheeled engine having two motors, one on each axle. These motors are of the con-

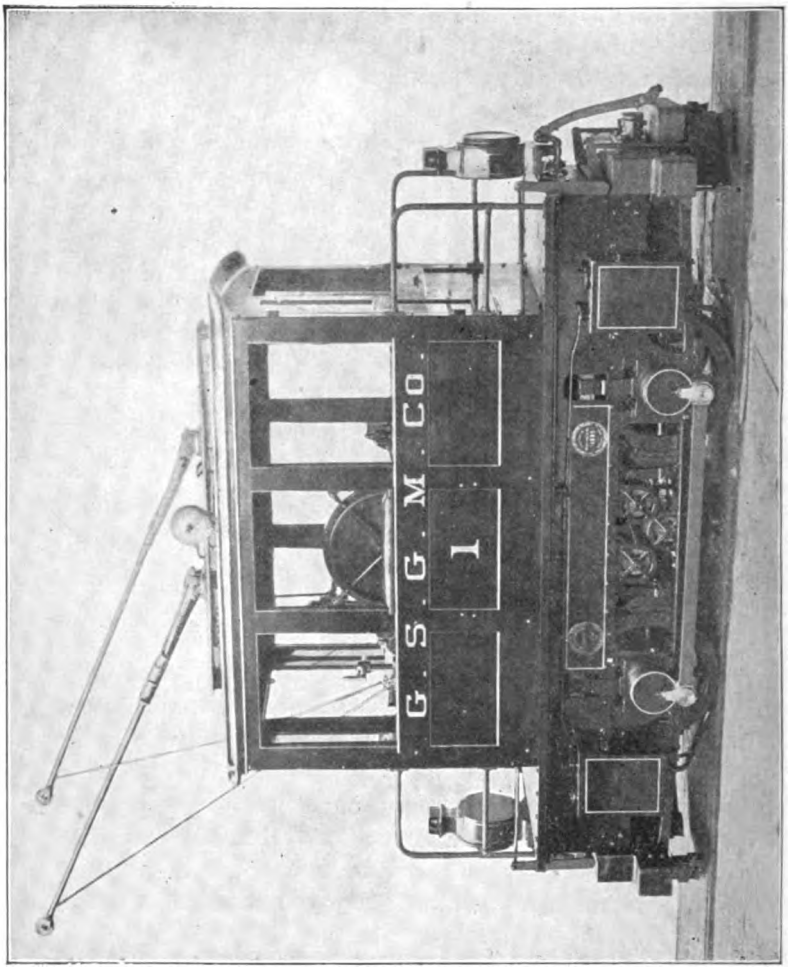

FIG. 372.—SWITCHING-LOCOMOTIVE.

sequent-pole type and have double reduction-gear. Motors were mostly of double reduction type when they first came into practical use, but this required an extra set of gear-wheels and pinions, and caused extra friction wear, making them very noisy. The motor was improved gradually, until now there is only the single reduction used with many advantages. In the locomotive being described it was necessary because of the slow speed of the engine when hauling a load. The capacity is 100 H.P. continuously for three hours at a speed of 6 miles per hour. The frame is of the bar type. The cab is mounted on the frame and contains the controlling apparatus. The engineer has a very clear view either ahead or back. This locomotive is outside-connected, that is, the wheels are inside the frame and the cranks are on the end of driving-axle outside of the boxes, this being a narrow-gauge engine.

Fig. 372 shows controlling-levers very plainly. One lever is the controller-lever and the other is the reversing-lever.

A feature of this locomotive is that of using connecting-rods. The idea is to get an adhesive power without using sand, and to prevent one motor starting ahead of the other or slipping, which is liable to happen without the rods.

The controller is of the series-parallel type. Air-brakes are used; the three-way cock is shown. The air is compressed by a pump driven by a small electric motor which is regulated automatically to a predetermined pressure. The air-pipes are shown on each end with the headlights. The rheostats or directors are carried under the cab as the cut shows, there being

FIG. 374.—INTERIOR MINING LOCOMOTIVE

three of the coil ribbon type. This locomotive has two trolley-poles to carry the current from the wire. The idea is for safety and to have a large contact area to take off the current. In locomotives of this class when it is desired to increase the adhesive weight the cab floor is generally loaded with cast iron.

Data.

Draw-bar pull.....4500 lbs. at 6 miles per hour
" " ".....6000 " " start
Diam. of drivers..... 33 inches
Wheel-base..... 6 feet
Weight on drivers..... 31,500 lbs.
Total weight..... 31,500 lbs.

Will haul a train of nine cars weighing 35 tons up a maximum grade of 5%.

Fig. 373 shows a mining locomotive of the low-down type to be used in the mines.

The frame forms the side and extension for draw-bars; the motors are in between the axles, and covered up entirely. The controlling apparatus and operator's seat are shown at the end with brake-wheel and head-light. The trolley-pole can be set in either socket cast in the frame. This trolley must be insulated to prevent short-circuiting and shocks to the operator. The current connections are made by insulated cable. The motor body and apparatus are carried on helical springs, which insures easy riding and prevents pounding on the rails. The locomotive has two motors, single reduction-gearing running in oil, one geared to each axle. They are spring-mounted. The motors are of the four-pole

steel-clad, enclosed railway type. The armature windings are laid in slots in the core, which means high efficiency secure against displacement.

The controller is of the rheostatic type with magnetic blowout, preventing arcing at the contacts. This controller permits of six speed-changes. The general workmanship is equal to that on a steam-locomotive. These locomotives show the compactness, flexibility, and few parts required in an engine capable of hauling small trains in mines.

WESTINGHOUSE LOCOMOTIVE (ELECTRIC). FIG. 374.

The electric locomotive shown is a radical departure from the locomotive just described. It is not divided into two parts coupled together. The body is very neat in appearance, and is so constructed as to permit material to be carried in it, or may be used to carry freight or baggage. All the operating appliances, such as controllers, gauges, and brakes, are inside. The trucks are substantially built using a bolster and centre-pin, which makes it very easy riding. The motors are suspended so they can be taken out without disturbing the other portions of the truck.

This locomotive differs from others by using gearing. Other locomotives are direct-connected to the drivers by a hollow sleeve and a spider. It permits of variable speeds. These motors are geared to produce a speed of 75 miles per hour, although 125 miles may be reached if it were required. There are eight wheels or drivers, which are 42 inches in diameter. The motors are rated at 200 H.P. each; they are four in number, one

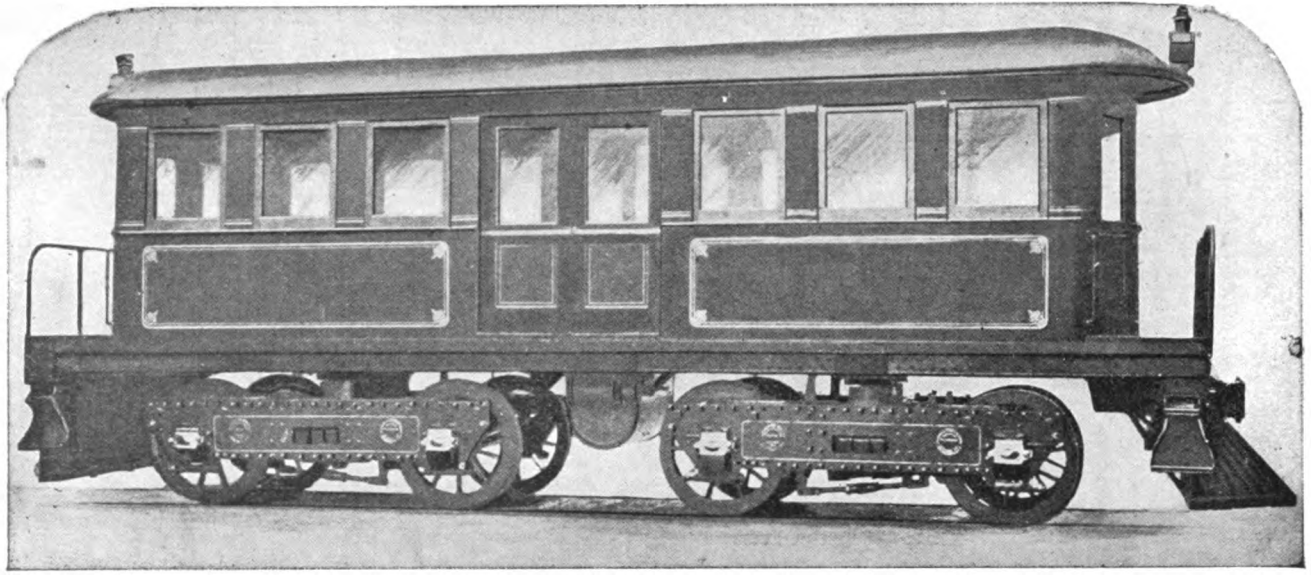

FIG. 374. —BALDWIN-WESTINGHOUSE ELECTRIC LOCOMOTIVE.

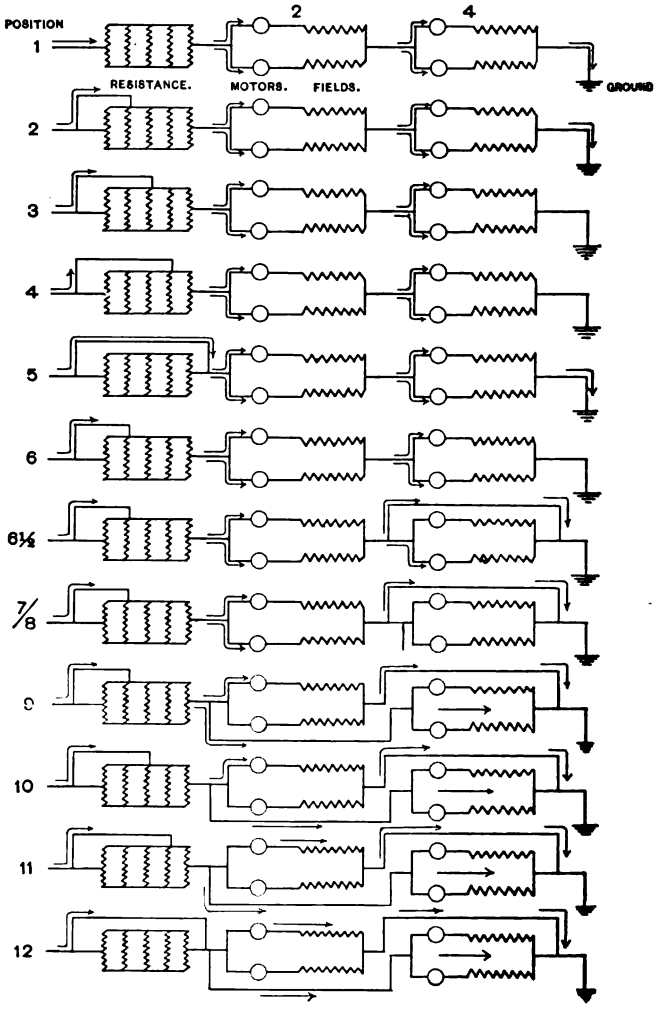

FIG. 375.—DIFFERENT COMBINATIONS OF MOTORS AND RESISTANCE FOR CONTROLLING A LOCOMOTIVE USING FOUR MOTORS.

on each axle. By this construction the entire weight of the locomotive is used as adhesive power. The locomotive complete weighs 160,000 pounds.

Westinghouse air-brakes are used. The air is compressed by an electric compressor placed under the floor of the locomotive.

The length is 38 feet, by 9 feet wide.

By using a geared motor the cost of a locomotive is reduced ; a motor using direct connections is very expensive. Under severe test the gear-wheel seems to give good results. The pilot on each end is the only feature suggestive of a steam-locomotive. This locomotive must depend on a central station for its power, therefore is not an independent unit like a steam-locomotive.

The diagrams (Fig. 375) show the method in which an electric locomotive using four motors such as the Westinghouse can be controlled.

CHAPTER XXIII.

PRIME MOVERS USED FOR GENERATING ALTERNATING CURRENT.

The power necessary to operate an electric locomotive is generated at a central station and the engine employed

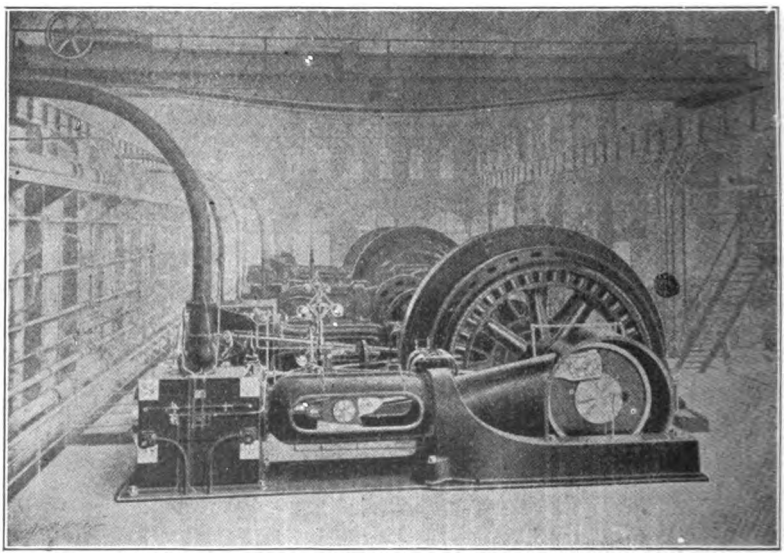

FIG. 376.—Three-phase Generating Station.

to drive the generators are compound condensing tandem and cross-compound. The engines shown in Fig. 376

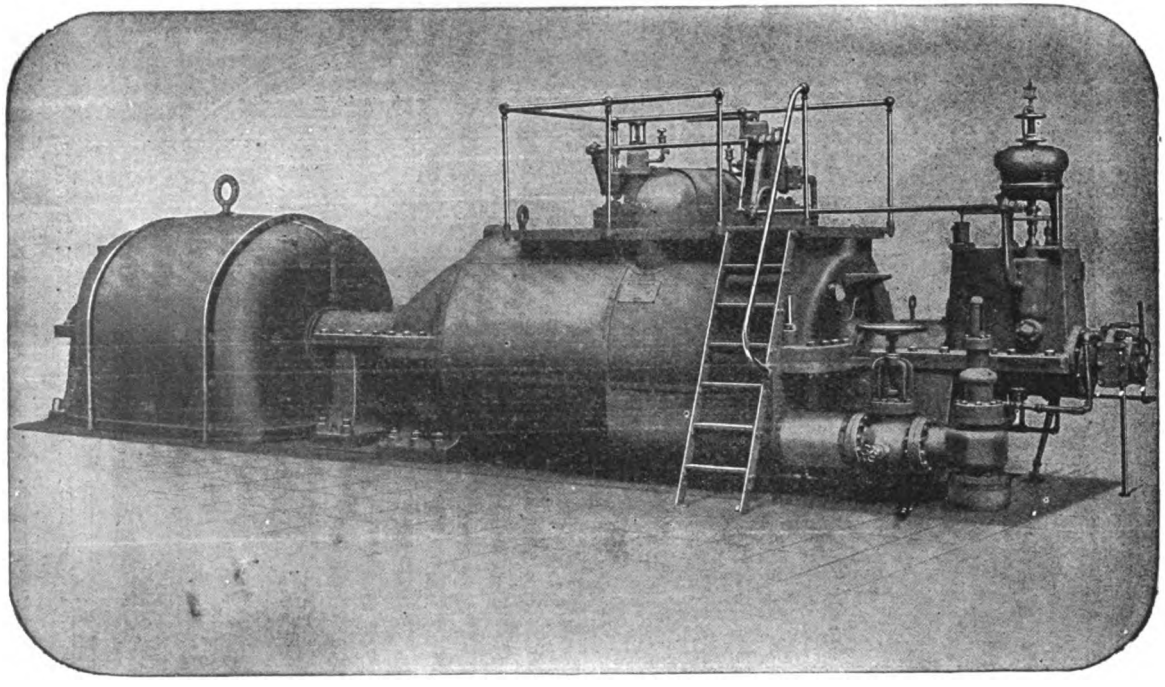

FIG. 377.—Three-phase Turbine Generating Unit.

are of the two-cylinder cross-compound type, condensing, driving three-phase generators. The generators for

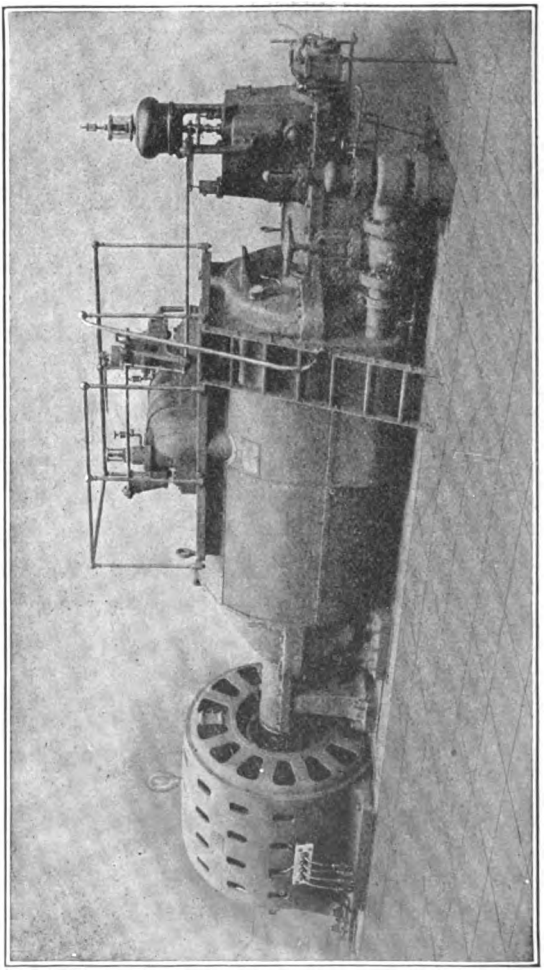

FIG. 378.—Westinghouse-Parsons Steam-turbine.

electric railroads are also driven by steam-turbines, shown in Fig. 377. In this type of engine there is no reciprocat-

ing mechanism or valve-motion. The type shown in Fig. 377 has a horizontal shaft upon which are mounted disks of varying diameters, increasing by steps from the high-pressure end of turbine to the low-pressure end, or outlet to condenser.* Upon the periphery of these disks are curved vanes or blades. The casing surrounding the shaft also has vanes or buckets. These blades are between the blades of the shaft and in line, and have a curvature the reverse of those on the disks of the shaft. The shaft-disks and blades are not in contact with any portion of the shell, but revolve free between the blades of the shell. When steam is admitted to the high-pressure end of the turbine the steam flows through the buckets of both shaft and shell or casing, causing the shaft to revolve, due to the reaction of the steam between the blades on shaft and casing. Expansion continues to the end of the turbine. There being many thousands of the small blades, the total power is that of one multiplied by the total number and the pressure or impact. The velocity of the shaft being very high, the turbine adapts itself to alternating-current generators to advantage, gives a constant speed and torque, and is easy to operate in parallel with other units. The generators can also be reduced in size for a given output by reducing the number of poles required. Speed ranges are from 500 to 3600 R. P. M.

* The reason the diameters of disks are increased by steps and the blades made longer is due to increase of volume in the steam as expansion takes place and the pressure falls.

CHAPTER XXIV.

APPARATUS ESSENTIAL TO THE OPERATION OF AN ALTERNATING-CURRENT ELECTRIC LOCOMOTIVE.

The operation of the electric locomotive depends upon the current generated at a central power station, and the power thus generated must be delivered to the locomotive. There are exceptions where the current is generated on the locomotive. These have been described. Fig. 376 is an interior view of a three-phase station composed of three cross-compound condensing engines operating three-phase alternating-current generators in parallel; the exciter sets are in the centre of the room. These generators are of the revolving field type with stationary armature (Fig. 379). The field pole and coils are mounted on a rim which is attached to a spider, or arms and hub, keyed to shaft between main bearing and fly-wheel. There are two collector-rings on the shaft to which the terminals of the field windings are attached. Bearing against each ring is a carbon brush or brushes. The current comes from an exciter and passes through field coils which are alternate north and south poles, the exciting current being a direct current.

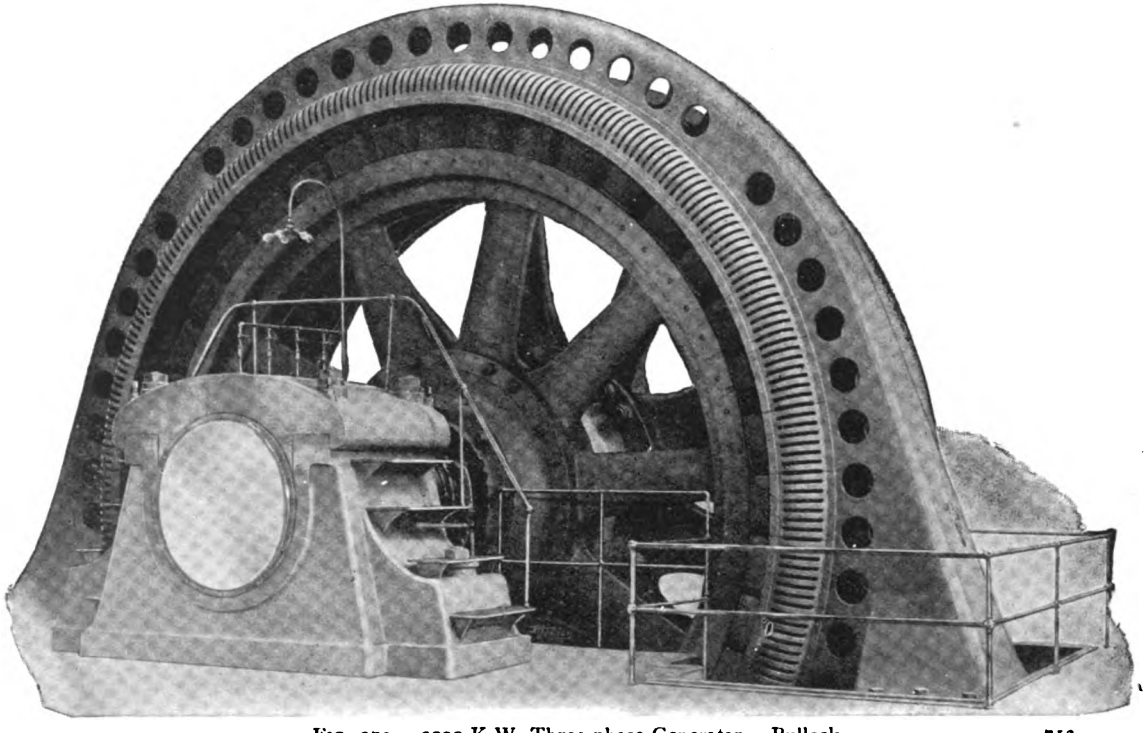

FIG. 379.—3000-K.W. Three-phase Generator. Bullock. 713

The idea of having the fields revolve is to have the current of low potential on the moving member, thereby reducing the danger of rupture or breaking down of the insulation due to centrifugal force or mechanical injury.

ARMATURE.

The armature in these generators is stationary and is built up of mild-steel sheets, forming lamination with proper grooves in which the winding is secured. Proper spacings are provided for ventilation. The armature core is secured rigidly by a frame of steel forming the outside of generator, with ventilating ducts and guard-plates on each side, the frame being in two halves, having substantial foot-plates to hold it on the foundation and permit the whole to be shifted for adjustment or to clear the fields. There are no collector-brushes to take the current off of this machine. The winding is of three-phase type, in which the coils are 120 electrical degrees apart and the terminals pass direct to the low-tension terminals of step-up transformers.

Fig. 380 is a diagram of a three-phase winding which is a single coil per phase per slot. The alternating current is generated in the armature windings by the field poles revolving within the armature, the lines of force or magnetism flowing from pole to pole through the armature winding and core, the current alternating or changing in sign or direction of flow due to rotation of poles. That is, at one instant a coil will be cut by lines of force from a north pole and the next instant by lines from a south pole.

The generators form a 25-cycle machine, the universal

type for railway operation. By cycle is meant a complete period, or where a coil passes two poles, as a south and a north pole, in which the E. M. F. has risen from zero to maximum positive and to zero again, from zero-line to maximum negative below the zero-line and return to zero, forming a sine curve above and below the zero-line or

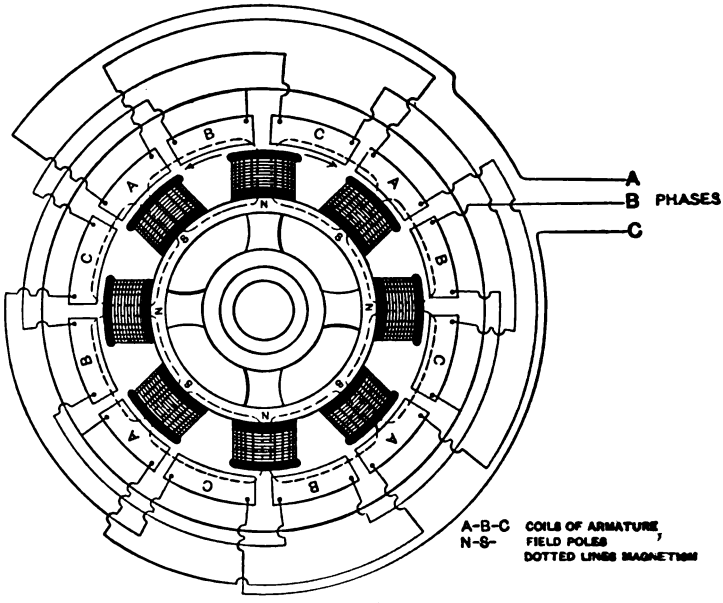

FIG. 380.

360 degrees. These cycles take place at the rate of twenty-five per second. (See Fig. 381 for sine curve.) The rise and fall of the electromotive force is shown, and its relation to the degrees of a circle is seen at the left side of the diagram. The circle is divided into four quarters, 90 degrees to a section. The sine curve is likewise so divided, and is above and below the zero-line,

showing the negative and the positive phase. A coil starting at the zero-line and entering the lines of force from a N. pole, the electromotive force gradually rises from 0° to 90°, as indicated by the parallel lines between the circle and the sine curve; that is, the period of maximum voltage moving form 90° to 180° of the circle, the electromotive force falls to zero. The coil in travelling from zero to 270° of the circle passes into the lines of

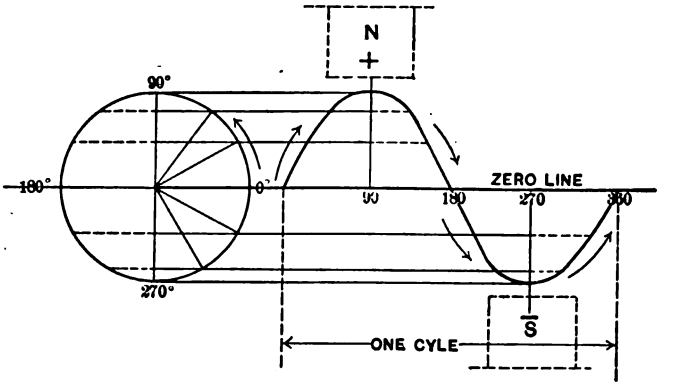

FIG. 381.

force from a S. pole and is the negative phase; from 270°, the period of maximum voltage, to 360° the electromotive force falls to zero. This is one cycle, and the current in the coil in passing the N. pole was flowing in one direction, and in passing the S. pole flowed in the reverse direction.

EXCITER SET. (Fig. 382.)

The purpose of the exciter is to energize the fields of the generator. It is a direct-current generator driven by any power. As a rule one or more sets are used in

a large station. Fig. 382 shows an exciter set, driven by a vertical steam-engine, which is used in starting up. The set to the right is driven by an induction motor and is used after getting generating units in operation, thereby doing away with the use of the steam-driven unit. Some exciters are directly connected to the main-shaft of the

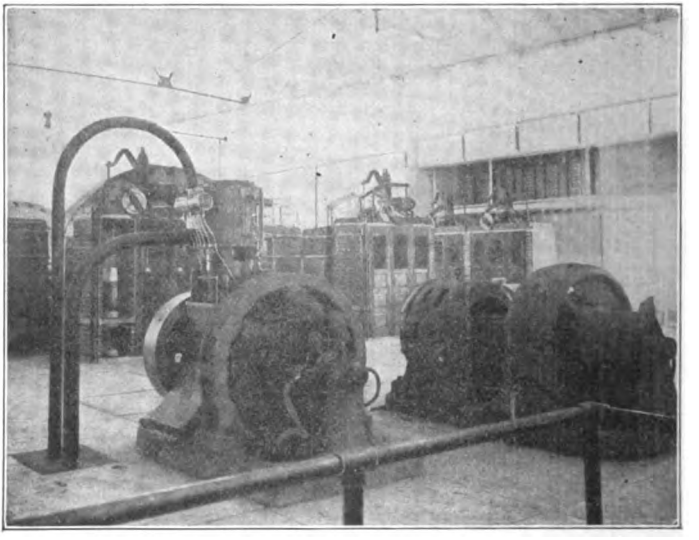

FIG. 382.—Exciter Sets.

generator and are thus driven by the main engine. The current generated by the exciter passes to the switch-board, from here through the field coils of main generator, and then returns to the exciter.

STATIC TRANSFORMERS. (Fig. 383.)

The transformer is the one piece of mechanism that makes the alternating system a success in either a lighting

or a power system, and involves a beautiful principle in electricity, making it possible to vary the voltage as required; and where currents of a high voltage and small amperage are transmitted over long distances to a transformer they are reduced in voltage and increased

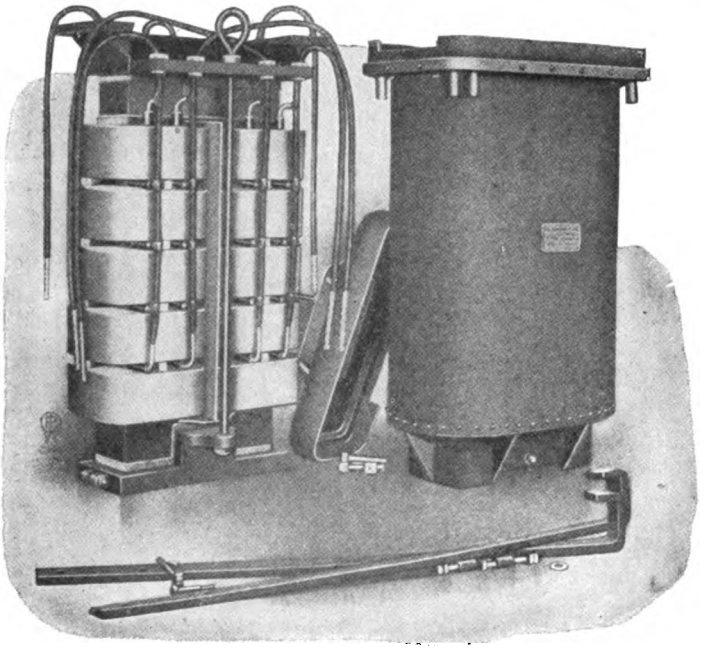

FIG. 383.

in amperage, the energy being the same. The high voltage permits a small wire to be used in the transmission lines, making long-distance transmission possible. The voltage of a line can be changed to a lower voltage through a transformer without the use of an ohmic resistance in the circuit, thus overcoming a serious loss. The

transformer is virtually a dynamo without any moving parts, as the armature or fields. Instead of the lines of force or magnetism being cut by moving wires on the armature passing through them, the wires in a transformer are stationary and the lines of force rise and fall through the wires, thereby cutting or enclosing them, generating a current therein.

There are several types of transformer. The most simple form is that of a ring of iron wire upon which are wound two coils of copper wire, insulated from each other (Fig. 384). The one consists of many turns of fine wire, and the other of a few turns of coarse wire. The first coil is the primary or energizing coil and is connected to the line circuit. The second is the secondary coil and is connected to the secondary circuit. This is the construction of a reducing transformer. In the step-up or raising transformer the fine wire raises the voltage from a lower to a higher one, the heavy wire being the energizing or exciting coil. In the first or reducing transformer the voltage entering the primary coil may be very high and the exciting current very small, the reduced current in secondary large with a reduced voltage. In a step-up or raising transformer thereverse is the case.

Of the several kinds of transformers there are the core and shell patterns, used in railway work, which are oil or air-blast cooled. An example of the air-blast type is shown in Fig. 385. This is of the shell construction. The coils are surrounded by the iron core, which is built up of soft steel or iron thoroughly aged, forming a laminated construction—a construction absolutely necessary in transformers. Fig. 387 shows the form of

the iron. These sheets are built one on top of the other, overlapping so as to form a closed magnetic circuit. The high- and low-tension or primary and secondary coils alternate with each other in assembling. The core is divided into sections to form ventilating-ducts through

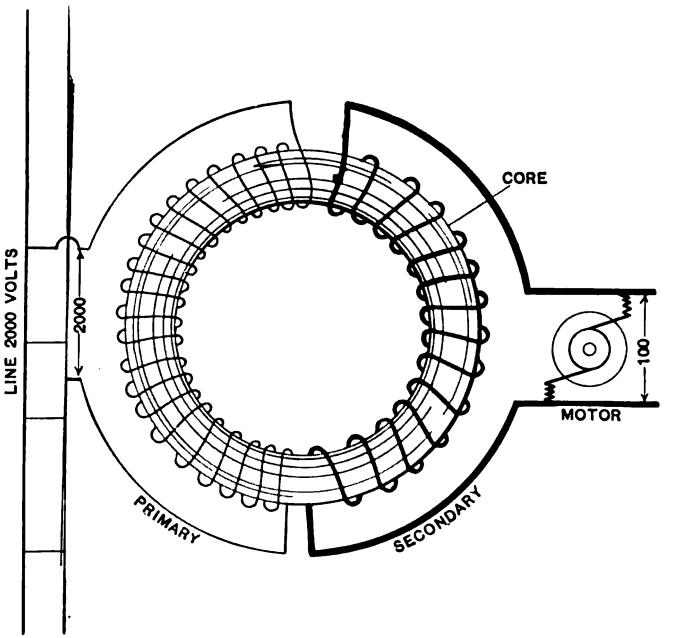

FIG. 384.

which air can circulate. The coils and core are enclosed in a casing with an opening in the bottom and proper dampers to regulate the air. The transformers are either set over an air-chamber or have air-ducts connected to the openings in the bottoms. Air is driven through them by a blower driven by an electric motor. The terminals of the high- and low-tension coils are brought out at

either the bottom or the top, depending on conditions. The low-tension coils are connected directly to the generator, the high-tension to the bus-line through high-tension motor-driven oil-switches or switch- or hand-operated. Another means of cooling transformers is by using

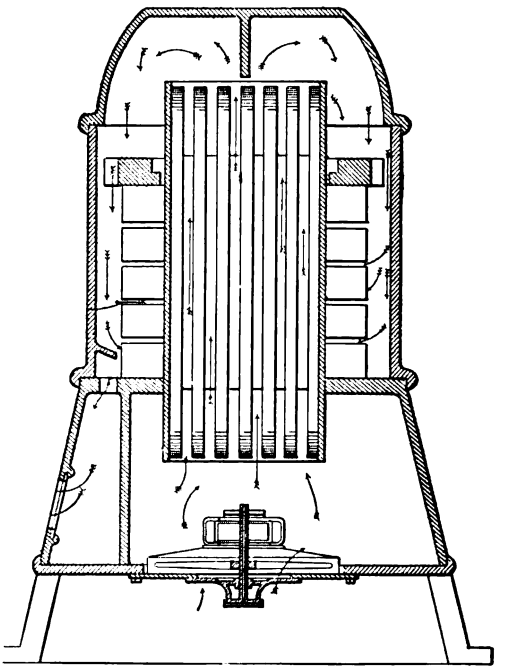

FIG. 385.

oil in the case which surrounds the coils, where it acts both as cooling agent and as insulator; also oil with pipe coils passing through the oil having water circulating through the pipe. Fig. 386 shows a three-phase type where three transformers are in one case, making a compact transformer. Transformers for rail-

way work are delta- or star-connected. (See Fig. 394, which is a delta connection.)

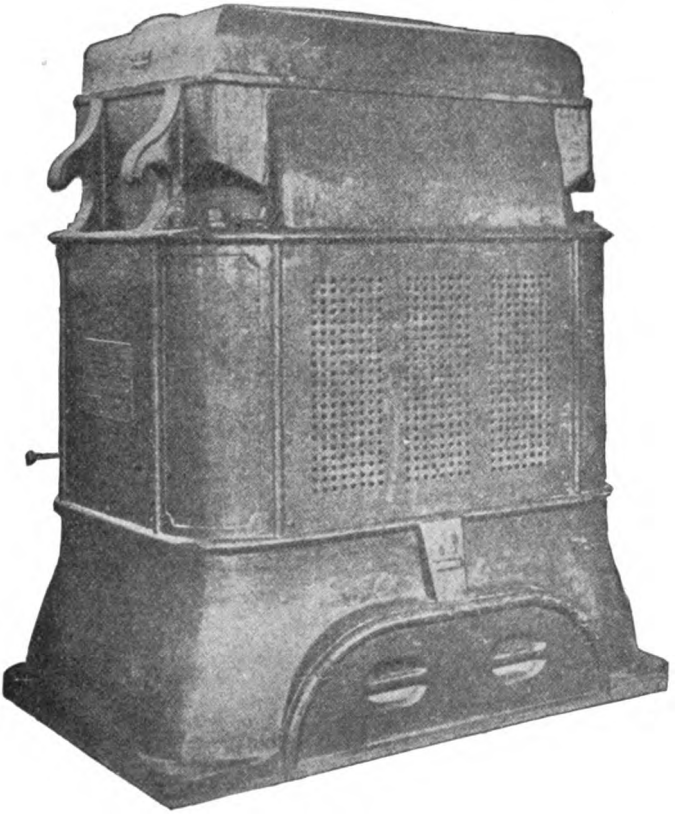

FIG. 386.

OPERATION OF A TRANSFORMER.

The current coming from the line and passing through the primary coils generates lines of force or magnetism in the core which, surrounding the secondary coil, cuts

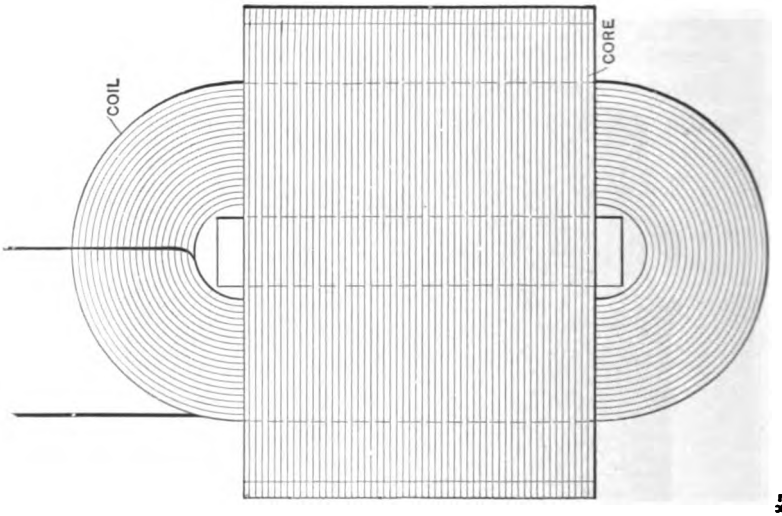

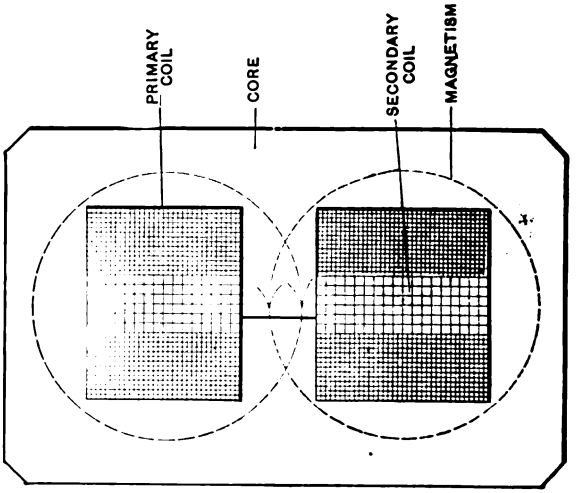

FIG. 387.

through the wires, generating an E. M. F. and causing current to flow in the secondary coil as long as current is being taken from the secondary side. This action in a transformer is possible only on an alternating circuit, as it is due to the rise and fall of potential, or from zero to maximum and back to zero. When no current is being taken from the secondary coil very little current is flowing in the primary coils, due to the high self-induction or counter E. M. F. generated in the primary coil opposing the line E. M. F. Current taken from the secondary coil has the tendency to produce an E. M. F. which neutralizes the counter E. M. F. in the primary coil and permits E. M. F. and current to be generated in the secondary coil, and in proportion to the amount used on the secondary side will the energy current flow in the primary coil. This is a beautiful and valuable principle and makes the transformer self-regulating. There are various ways of connecting up transformers for different results. The method shown in Fig. 394 is that used in general for electric railroads using electric locomotives.

OIL-SWITCHES.

The high-tension circuit with the transmission line is connected to the locomotive by means of quick-acting switches whose terminals are immersed in oil. Fig. 382 shows several of these switches, one with door removed to show construction. There are three pairs of terminals in this switch, due to the three phases. These terminals are in the bottom of the oil-pots and are insulated from the sides by porcelain bushings. The top is also fitted with porcelain. The upper or movable terminal is in the form

of a copper rod and is attached to a yoke. There are two sets of terminals and pots per phase. These rods are attached to a wooden rod which is attached to the yoke. This yoke carries the three sets of plungers and slides in guides. To the yoke is attached a lever fulcrumed at one end. To the centre of the lever is attached a rod connected to a pin on a crank-disk. This disk and the shaft are revolved by an electric motor to open or close the switch. At the top and bottom of the guide in which the yoke travels are pockets in which are fixed coil-springs. When the switch is opened, the bottom spring, being in tension, quickly opens the switch. The electric motor moves the yoke up and forces it against the top spring, placing the switch under tension to close. This causes the crank-pin to travel a little past the centre, where the shaft is held locked by a locking-cam. When the switch comes to that position the electric-motor clutch releases and lets the switch remain in position to close. The locking-cam is held in position by a knuckle-joint. When the switch is closed automatically the trip-magnet throws the knuckle-joint past the centre or locking position. This releases the locking-cam and permits the spring to close the switch. The electric motor causes the crank and shaft to revolve and draw the yoke against the bottom spring and place it under tension to open switch. At the same time the crank-pin just passes the centre on the bottom quarter and is locked by locking-cam and knuckle-joint, the motor releasing and letting switch set in that position. The trip-magnet is operated by a reverse or overload relay at switchboard which closes the circuit through trip-magnet. When there is a short circuit, ground, or overload which causes the switch to

open automatically, or when two generators put in parallel are not in synchronism, indicating lamps at the switch show when the switch is open or closed, and are placed in circuit by contact-brushes and cams on the crank-shaft, those cams making contact in whichever position the switch might be. Use a green light for open position and a red light for closed position. These switches are placed in separate cells, one for each phase. While some switches are operated by an electric motor, others, involving the same principles, are actuated by solenoids which have a plunger to which is attached the lever moving the yoke carrying the movable switch terminals, this plunger being drawn into the solenoid when current passes through the coil.

ROTARY CONVERTER OR TRANSFORMER. (Fig. 388.)

The rotary transformer is that piece of mechanism which changes the alternating to a direct current. The usual direct-current generator generates alternating current in its coils, and the function of the commutator is redress or to make the alternating current flow in one direction from brush to brush. A direct-current generator will operate as a rotary transformer by bringing out the taps equidistant to collector-rings from the winding of the armature and connecting the rings to a source of alternating current. A two-pole generator having two taps will produce a single-phase alternating current at the collector-rings and a direct current at the commutator. That alternating currents are generated in the armature is due to the fact that, since there is a north and a south pole, the wire of a coil at one period is cutting lines of force of north polarity, while at the next instant it is cutting

lines of force of a south polarity, and at each period the current flow would be in opposite directions, or alternating. Fig. 389 shows a diagram of a three-phase rotary having six poles. As shown, a rotary has a commutator on the direct-current side and three collector-rings on

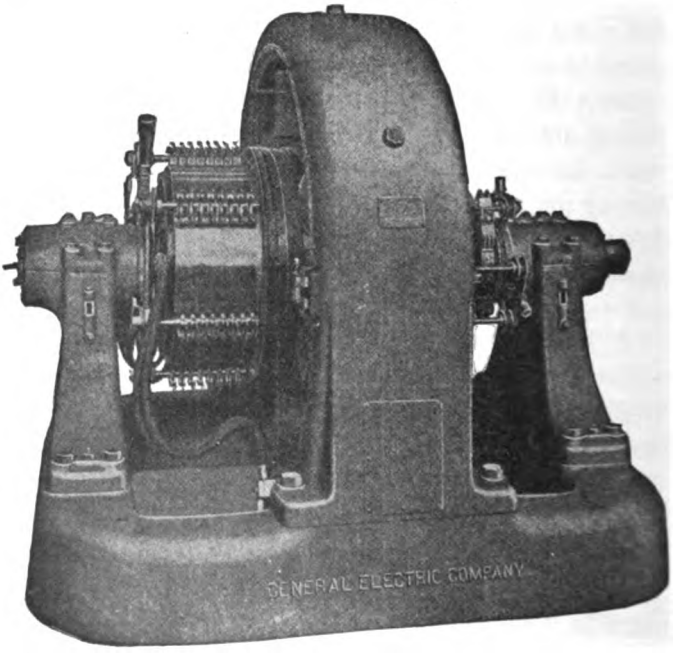

FIG. 388.

the alternating side. The diagram shows the armature wound as a ring armature for simplicity, with connections to commutator and to collector-rings. The connectors to collector-rings in this case are shown as taken from the commutator segments instead of being taken from the winding on the alternating side of armature, the result

being the same. There are three leads to each ring, or one to each pair of poles. The connections are indi-

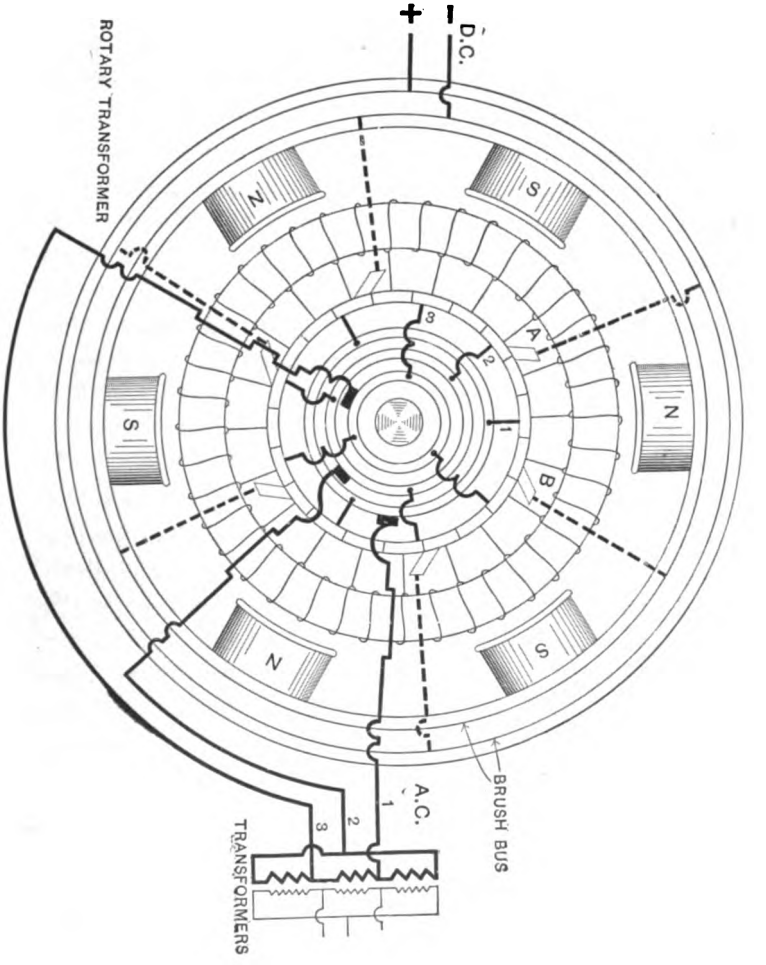

Fig. 389.

cated by 1–2–3. The connections as shown between each ring and the commutator per phase are 120° apart.

The brushes *A* and *B* are the direct-current brushes, of which there are six, or two per pair of poles, negative and positive. the same as a multipolar generator. The rotary is a synchronous motor and operates as such. It runs in synchronism with the main generator and will vary its speed accordingly: it will run at the same speed as generator if it has the same number of poles; but if it has a less number, it will run at such a speed as the frequency of its alternations is the same as that of the generator. The field magnets of a rotary may be either shunt or compound-wound and the current to excite the fields is taken from the direct-current side of machine, the same as a direct-current generator.

REGULATION.

Changing the field excitation will not change the speed, but will affect the amount of current taken from the line. There is a certain excitation for each load to the direct-current side, and this excitation should be kept at that point as near as possible to get the maximum efficiency. By under- or over-excitation the current can be made leading or lagging. By either increasing or decreasing the field excitation the rotary will take more current from the line, while the load on the direct-current side may remain the same. If the excitation be increased beyond the point of minimum current required from an alternating-current line, the current becomes leading and causes a phase displacement between current and electromotive force. If the excitation is decreased beyond the point of minimum current required, the current becomes lagging in phase or behind the E. M. F. The result of the phase

displacement of current and electromotive force is to require a greater amount of current to be generated for a given amount of power delivered. Then it is important that the field excitation should be kept at a point of minimum current consumption from an alternating-current line for loads on the direct-current side of the rotary. The nearer the current and the electromotive force are in phase, the higher the power factor. The result of a phase displacement is to reduce the power factor. The direct current voltage of a three-phase rotary is 1.63 times that of the alternating current delivered at the alternating-current side of rotary. If a three-phase rotary is delivering current having an E. M. F. of 500 volts on the direct-current side, the voltage on the alternating side will be about 306 volts. The voltage of the direct current can be increased by the field excitation to a certain extent. For greater increase the voltage must be raised on the A.C. side. For various voltages the A.C. transformers must have different taps brought out to which the rotary can be connected. The current flow in the armature of a rotary is the difference between alternating current supplied and that delivered at the D.C. side. The machine is operating on one side as a motor and at the other side as a generator, and nearly all the power taken at one side is delivered at the other. The rotary will deliver current to operate motors, and at the same time will act as a motor to which a generator may be belted, the generator delivering current to any service. Rotaries are built for single-, two-, or three-phase current; but the three-phase rotary as a rule is used for systems operating locomotives, and is of the 25-cycle type.

OPERATION.

The rotary is connected to a bank of three transformers and with the secondary windings by proper switches and leads from each collector-ring, and is started either as an A.C. or a D.C. motor, or by having an A.C. motor on the rotary shaft. If started on the A.C. side, the field switches are open and the starting-switch put on half-voltage taps from transformer until up to speed and proper polarity; when the field switches are closed, the starting-switch put on full-voltage taps and the rotary brought to synchronism or in phase with other rotaries, if there are any. If started from the D.C. side, the switches are closed to the direct-current feeder, the main positive switch being open but bridged by a starting-switch and rheostat. The starting-switch brings the rotary up to speed gradually until the proper speed is attained. The rotary is then synchronized and the A.C. switches thrown in, the rotary operating then as a synchronous alternating motor, the direct-current main switches being closed to the feeders. When started by using induction motor the motor is supplied with alternating current, which brings the rotary to speed; being synchronized with the other rotaries, the A.C. switches are closed, the motor switches opened, and the direct-current switches closed to feeders. The alternating current entering the armature passes through the armature windings. When they cut lines of force generated by the field coils, the voltage is raised and then the current passes into the commutator on the direct-current side, and thence into the brushes and to the feeder circuit and trolley or third rail, to operate the motors on the locomotive.

INDUCTION REGULATORS.

Induction regulators are employed on electric circuits using alternating currents, for the purpose of raising or lowering the voltage or regulating the voltage of several circuits having different loads either for lighting or power; and are used on electric locomotives operating on single-phase alternating currents, for the purpose of varying the voltage applied to the motors for change of speed. Figs. 390 and 391 are diagrams of induction regulators. Fig. 390 is a regulator similar to a transformer and is constructed with an outer shell composed of disks of soft iron, slotted into which are placed coils of wire at right angles to each other. Within this outer shell is placed a core of soft iron, laminated. This core is capable of being rotated on its axis. The one coil is the secondary and is connected in series with the line or one side of the circuit of which the pressure is to be varied. The other coil is the primary and is connected across the circuit or in shunt. A shaft and gear is provided to rotate the central core.

Operation: When the central core is at right angles to the primary coil the total flux or magnetism cuts the secondary coil, but when the core is rotated so as to pass through both coils a greater or less quantity of magnetic flux generated by the primary coil passes through the secondary coil, increasing or decreasing the voltage in that coil, thus varying the voltage applied to the motors gradually without fixed variations, as when taps are taken from an auto-transformer.

Fig. 391 shows an induction regulator which is similar to an induction motor and is used on electric locomo-

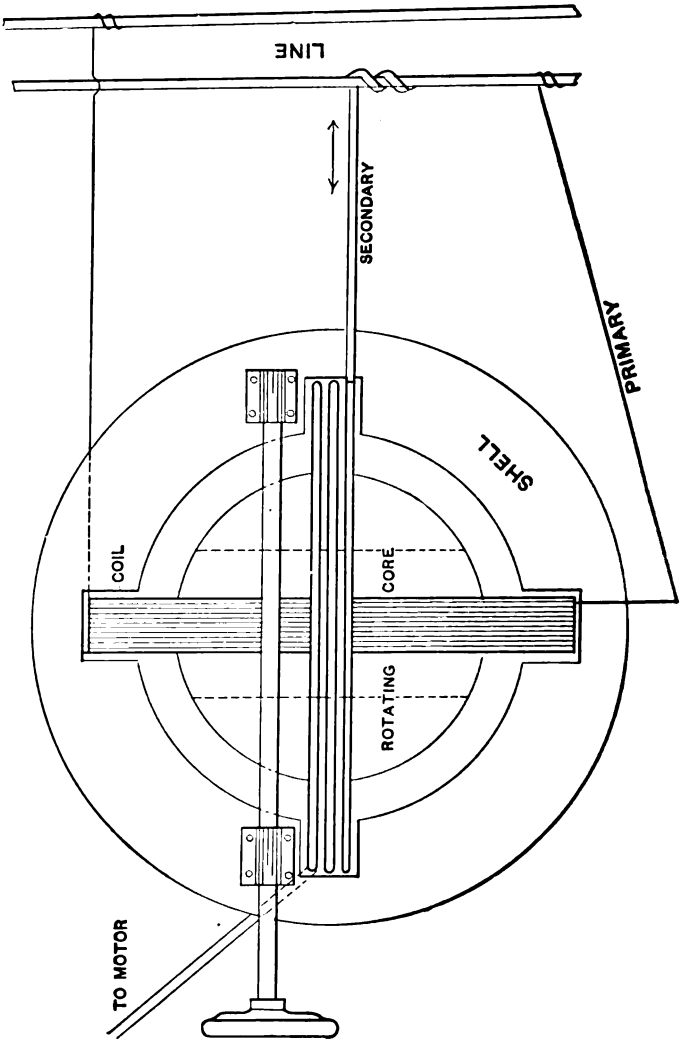

FIG. 390.

tives for the purpose of varying the voltage applied to the motors, while the principle involved is similar to that of Fig. 390. The primary winding is wound on the core and both are revolved. The cut is a diagram of a two-pole regulator to be used on single-phase circuits. The outer shell carries poles, and on

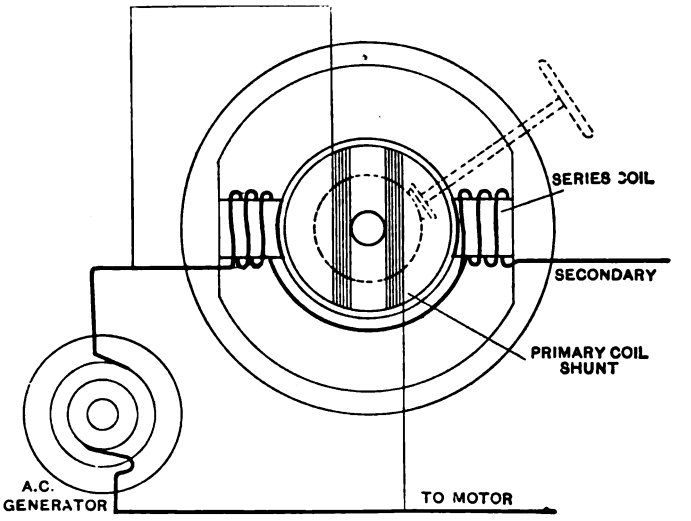

FIG. 391.

them are wound the series-winding or secondary coils which are in series with one side of the circuit to be varied in E. M. F. The primary is wound on the revolvable core so as to form two poles and is connected across the circuit. The range of regulation is over 180 degrees. In practice this regulator has the outer shell made up of circular soft iron, with slot in the outer surface in which the secondary coils are laid, as in an induction motor, instead of poles, as in cut.

The primary coil is also built up of soft-iron disks with slots, and the coils laid in. The regulation of the voltage supplied to the motors is effected by moving the primary core, which changes the relative position of the primary and secondary coils. This changes the phase relations of the primary and secondary voltages, and therefore changes the voltage of the secondary, which is the resultant of the primary and secondary voltages.

AUTO-TRANSFORMER. (Fig 392.)

The auto-transformer is used for varying the voltage taken from an alternating circuit for operating motors or for starting motors from a state of rest. The voltage of the line must be applied gradually or in steps until the proper speed of motor is attained. If this means were not provided in starting a motor, an excessive rush of current would take place, interfering with the operation of motors and lights on the circuit. A single-phase motor requires one auto-transformer, two-phase two, three-phase three auto-transformers, one for each phase. The auto-transformer has only one coil of wire, and in this feature differs from a regular transformer, which contains two coils, a primary and a secondary. The single coil of the auto-transformer is surrounded by a core of shell type which is built up of soft iron stamped in the form of the letter E. These sheets are laid one on top of the other around the coil until a sufficient number are assembled, each end of the coil projecting beyond the core (see Fig. 392). Taps are brought out from the coil at various points in its length as shown. The wire 1 is the beginning of the coil, and 5 is the end-

ing. The intermediate taps 2, 3, 4 are taken from several points in the coil. No. 1 is attached, say, to a main having 3300 volts, and No. 5 is connected to ground, the coil being indirect shunt across the machine if one

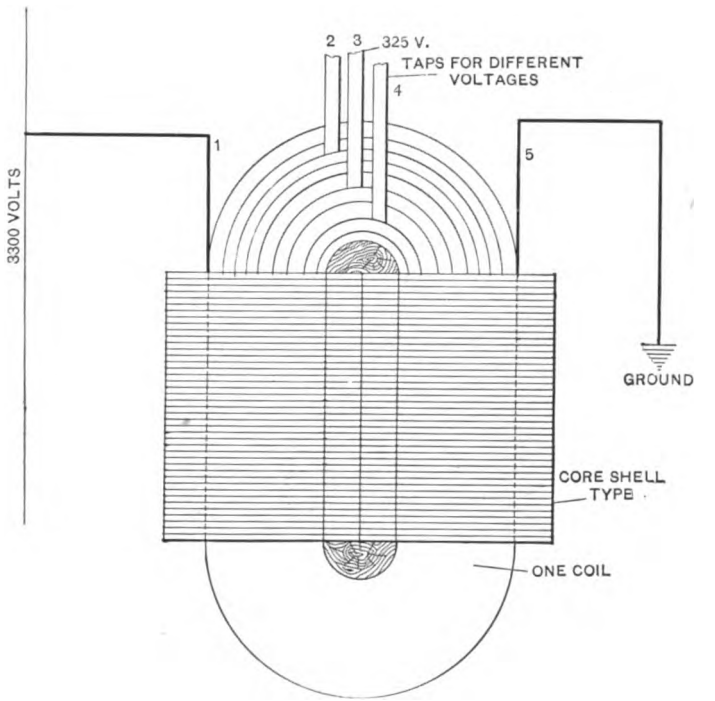

FIG. 392.

side of the machine was grounded. For example, the voltage at tap 3 would be 325 volts, at tap 2 the voltage would still be greater, while at tap 4 it would be less. In motor operation this principle is used. The taps are connected to switch terminals and are switched in as the

speed variation is desired, varying the voltage applied to the motor. The reason that different voltages can be taken from the auto-transformer is due to the law of self-induction and reactance. Self-induction is produced in the auto-transformer by the magnetizing current flowing in the winding, and the voltage will be in proportion to the inductive drop across the transformer winding. If each turn has the same resistance and the same inductive resistance, the voltage at the taps will be in proportion to the number of turns between the taps as compared to the whole number of turns. The inductive drop is caused by the counter-electromotive force of self-induction, which opposes the impressed electromotive force.

LINE CONSTRUCTION.

The introduction of the single-phase system required a different construction in the line carrying the current to the car or locomotive. As the voltage required is six to ten times greater than the usual direct-current voltage, there has been developed the catenary trolley. The system is exceedingly flexible and permits of the use of the E. M. F. most advantageous in any locality, irrespective of that employed in other parts of the road. If necessary, the locomotive car may be operated with different trolley voltages. The voltages required are 3300 to 6600, depending upon service and circumstances. As the high voltages demand substantial construction, the catenary system meets the demand and is installed under the pole and side bracket or the structural-steel bridge system. Fig. 393 shows the side-bracket pole-line. The construction consists of a galvanized steel messenger

on supporting cable from which the trolley is supported at intervals of a few feet, the whole being

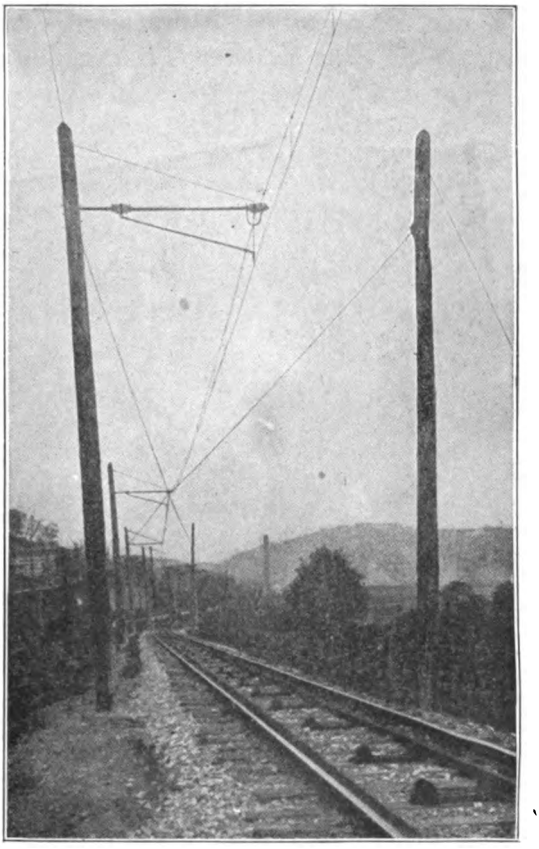

FIG. 393.

hung from heavy porcelain insulators. The trolley wire is grooved and is suspended from the messenger cable by means of rigid hangers of galvanized malleable iron

of varying length, so that the trolley wire is hung at a uniform distance above the track. The messenger cable is connected electrically as well as mechanically to the trolley, so that it can be regarded as an auxiliary feeder. The insulators are made of corrugated porcelain, in such form as to provide an extended surface and sufficient thickness to prevent breakdowns. The cuts give a clear idea of the construction as applied in practice.

CHAPTER XXV.

ELECTRIC LOCOMOTIVES OPERATING ON ALTERNATING SYSTEMS.

ELECTRIC locomotives equipped with direct-current motors which receive their current from a direct-current generator are restricted in their radius of operation, due to the great amount of copper that has to be installed to prevent the loss or drop in voltage. This great cost for feeder lines as well as the drop of voltage is overcome by using the polyphase or single-phase systems—the last made possible by the development of the single-phase alternating motor. A description of each method is considered proper, as the source of current and means of delivering it to the locomotives is as important to the reader as the description of the locomotive.

The three-phase system is the one most universally used at present for operating cars or locomotives on long-distance or interurban systems, and consists of a three-phase generator driven by any prime mover, a set of three single static transformers or a single shell with three transformer windings therein. The three windings on the generator armature are connected to the primary windings of the static transformers as shown by Fig. 394,

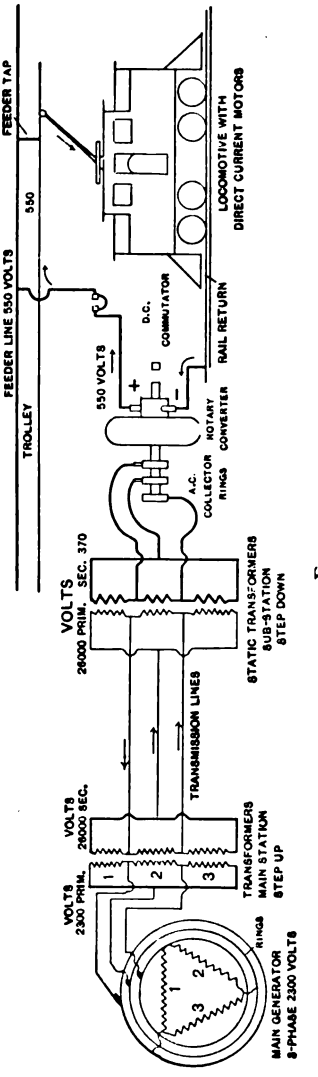

FIG. 394.

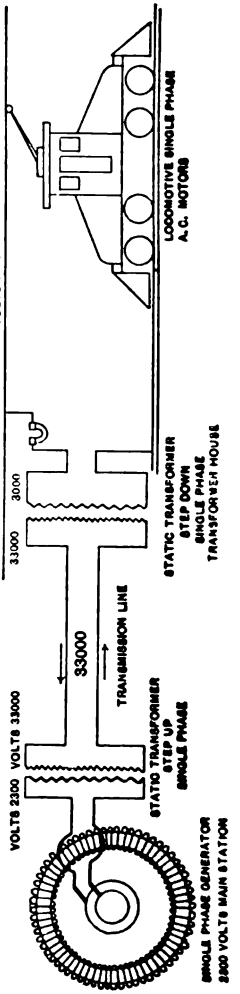

FIG. 395.

which is a diagram of a three-phase system. This set of transformers is called rising or step-up transformers, raising the voltage from its generator voltage of 2300 volts to that of 26,000 volts on the secondary in this particular case. The current is generally passed to bus-bars suitably situated. Motor-driven oil-switches are interposed between the transformers and the bus-line; another set of oil-switches connect the bus-lines with the transmission lines. By stepping or raising the voltage to 26,000 volts the copper in the transmission lines is reduced to a minimum, thousands of horse-power being driven over a line not much thicker than a lead-pencil. The usual three-phase system requires three lines of copper, as the diagram shows, between main and sub station. On long-distance systems substations are situated along the line, at distances apart depending on circumstances, but averaging ten miles. The substation contains a set of static transformers with suitable switches between the line and transformers. These are called step-down or reducing transformers. There is also installed a rotary converter for the purpose of changing the alternating three-phase current to direct current. The rotary runs as a synchronous motor. A suitable switchboard and instruments are provided to operate the machinery. The current enters the static transformers from the transmission line to the high-tension winding; the secondary or low-tension winding delivers the reduced current to the alternating side of the rotary through the leads and three rings as shown. The current is changed from an alternating to a direct current in the rotary armature, is taken off at the direct-current side by the brushes and passed to the switchboard, from there

to the feeder line and trolley wire, through the direct-current motors on the locomotive to the rail, and then returned to the negative brush of the rotary converter. The voltage in this case is marked. It will be seen that the voltage is stepped down from 26,000 to 370 in the secondary winding of substation static transformers. Passing to the rotary it is again raised to 550 on the direct-current side to operate the motors. While this diagram shows a raising or step-up transformer in the main or generator station, all three-phase systems do not use them, as generators are built where 13,200 volts can be taken direct from the machine and transmitted over the line. This reduces the voltage one half over the system shown, requiring more copper in the line for a given horse-power delivered. It reduces the number of pieces of mechanism in the system by eliminating the raising transformers. Each substation requires an attendant day and night, and has a machine in the rotary which has a moving element, the rotary armature, which requires care and must be stopped and started. Fig. 423 is a locomotive operated under the three-phase direct-current system.

SINGLE-PHASE ALTERNATING SYSTEM.

Fig. 395 is a diagram of a single-phase alternating system in its simplest form. The reduction in the number of parts of the mechanism is readily seen when compared with the three-phase system, as far as the generating, distributing, and stepping-down are concerned. There are other methods of generating and distributing, as a three-phase generator current changed to two-phase, passed over the line to transformers and thence as single-

phase to cars, which is the Scott method. In the system shown a single-phase generator is employed, generating

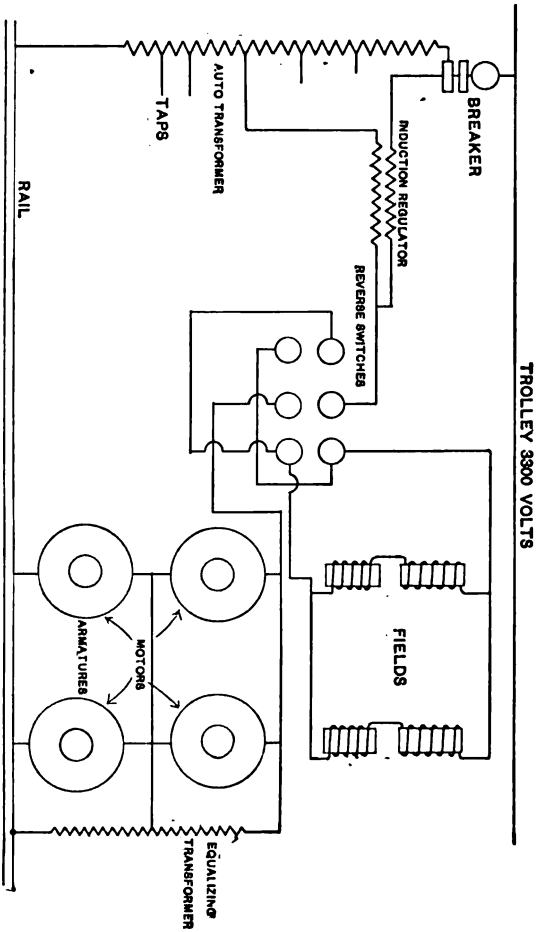

FIG. 396.

current at 2300 volts which passed to the primary winding of a single-phase transformer, where it is stepped-up to

33,000 volts for transmission over the line, which has only two wires instead of three as in the three-phase system, but contains more copper for the same horse-power delivered than that of the three-phase system. The current enters the high-tension winding of the transformer at the transformer-house, where it is stepped down or reduced to 3000 volts, when it passes out to the single trolley-wire and to the car-motors. It will be seen that under this method the rotary transformer is not used in the substation, thus doing away with the constant service of attendants, which is a large item of expense. Also by using high voltage on the trolley line, the use of feeder lines is omitted, making a great saving in copper. The factor that made the single-phase system possible was the development of a single-phase alternating motor. Fig. 396 is a diagram of a locomotive equipment using single-phase motors (Westinghouse-Baldwin locomotive). The principal parts of the equipment are shown in diagram: auto-transformers, induction regulators, reversing-switches, motor-fields and armatures and equalizing transformer.

MOTORS. Fig. 397.)

The motors are of the straight series, commutator type. Straight series means that all of the windings, both of the armature and of the fields, are in series. (See Fig. 396.) This single-phase alternating motor is of the box type and resembles in mechanical form and construction the later types of direct-current railway motors of equal capacity. The most noticeable difference between the two types is in the construction of the field, which in the alternating-current motor is built up of circular punch-

ings of soft sheet-steel. This laminated field is supported in an outer frame of cast steel. The end brackets are accurately fitted on machined seats and carry the arma-

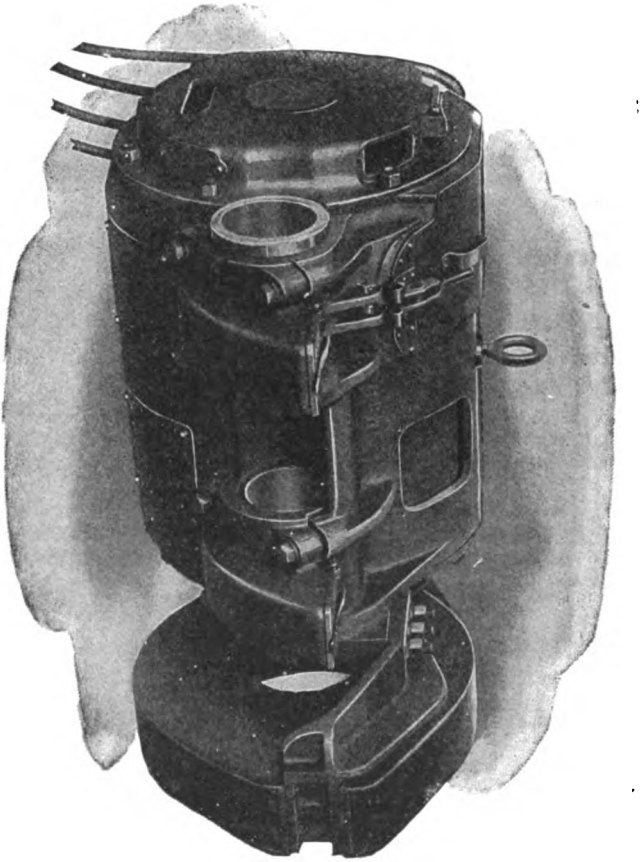

FIG. 397.—No. 106 Westinghouse A.C. Railway Motor.

ture bearings (Fig. 398). The brush-holders are supported on a bracket on the commutator end. The motors have inwardly projecting poles which are wound with

coils of heavy wire or copper strap. An auxiliary compensating winding is also provided, threaded through slots in pole-tips and field-frames. All windings of field and armature are in series.

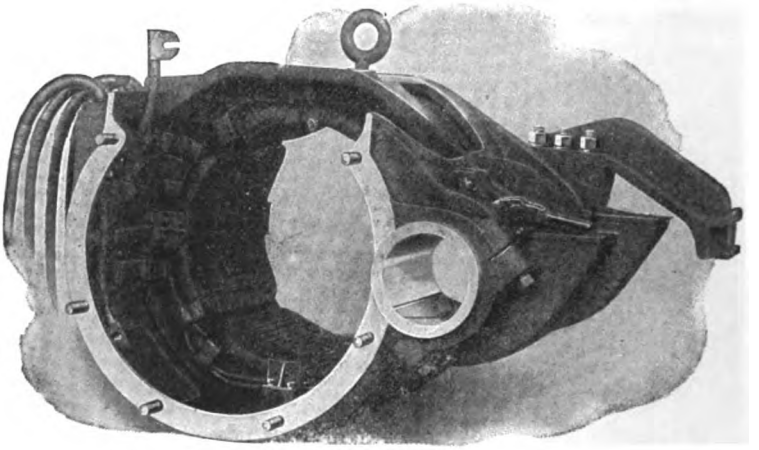

FIG. 398.--A.C. Railway-motor Field --End Bells Removed.

ARMATURE. (Fig. 399.)

The armatures of these motors are of the slotted-drum type with laminated core of steel mounted on a cast-iron spider. Specially designed spaces in the core provide for ventilation. The commutator is mounted on the extension of the armature spider. In appearance the armature differs very little from the standard direct-current railway-motor type. The laminated fields prevent the excessive heating and burning out of field winding which would otherwise occur. The effect on a solid iron coil in a solenoid through which an alternating cur-

rent is flowing is to cause the iron to heat up rapidly, due to reverse and cross-current, and all magnet and field poles used on an alternating circuit are constructed on the laminated principle. The principal source of trouble in a commutating alternating motor is in the excessive sparking at the brushes, due to the secondary current

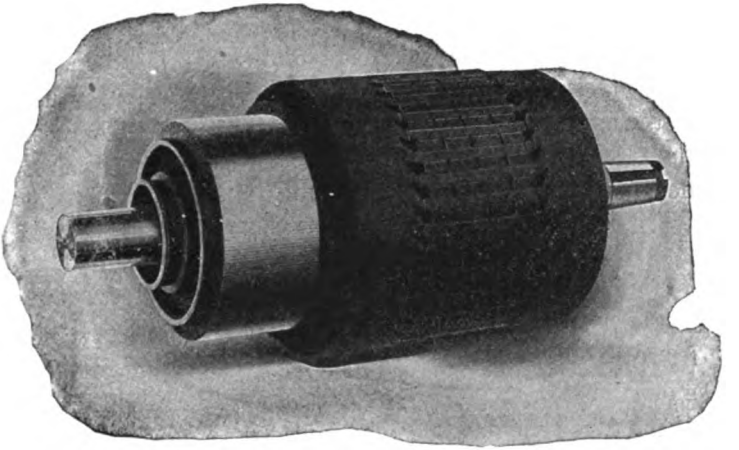

FIG. 399.—No. 106 A.C. Railway-motor Armature.

set up in a coil which is short-circuited momentarily by the two ends being closed through the brush. This coil encloses the alternating magnetic field and thus becomes a secondary to the field-coils of the motor which forms the primary. This feature is overcome by having the current in the short-circuited coil very small, and by slotting the pole-tips and embedding them in a compensating winding which counteracts or prevents a current flow that would cause sparking.

AUTO-TRANSFORMERS. (Figs. 396 and 448.)

In order to reduce the high voltage of the trolley to that of a lower voltage before being applied to the motors or to produce a variable voltage, a reduction is produced by a transformer carried on the locomotive. In the Westinghouse system this transformer is known as an auto-transformer, or a transformer with a single coil wound on the core, and of air-cooled form, and in the present case the voltage is reduced to 325 volts for use at the motors. This auto-transformer is connected across the circuit, and taps are brought out at different points depending on the voltage desired.

REGULATION.

The single-phase alternating-current motors are controlled by variation of the electromotive force at the motor terminals. This variation of the E. M. F. may be obtained by taps leading out from the auto-transformer windings (see Fig. 396), giving several voltages, or by the use of an induction-regulator. In the former method the various connections required are made by means of unit switches or a hand controller of the drum type, depending on the size of the equipment. The induction-regulator used on the locomotive is virtually a transformer with a movable primary coil with respect to the secondary, so that the secondary voltage is raised or lowered by the change in angular position of the primary coil and may either be added to or subtracted from that of the main auto-transformer. (See Figs. 390 and 391 for construction of induction-regulator.) Either of the

methods of regulation provides a wide range of speed and an effective system of control efficient in all positions, and also provides a number of running speeds. The losses due to resistances are avoided.

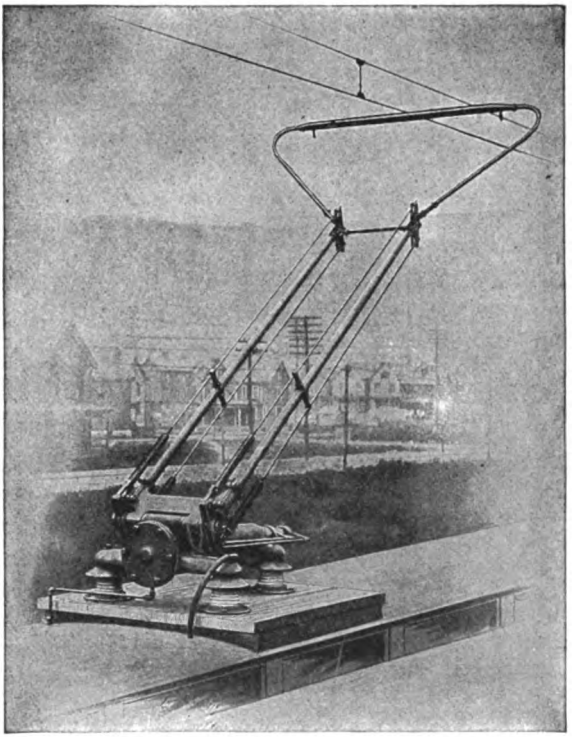

FIG. 400.—Pneumatic Bow-trolley with Sliding Shoe.

Trolley (Fig. 400).—With high potential on the line, a bow form of trolley is used. The trolley-base is set up on high potential insulators. The trolley is composed of two poles hinged on a base in the form of a cylinder. A piston is in the cylinder, and the piston-rod is

attached to the rods connected to the levers on lower end of trolley. The upper end of trolley is a bow having a shoe which is in contact with the trolley-wire and takes the wear. The poles are trussed to strengthen them.

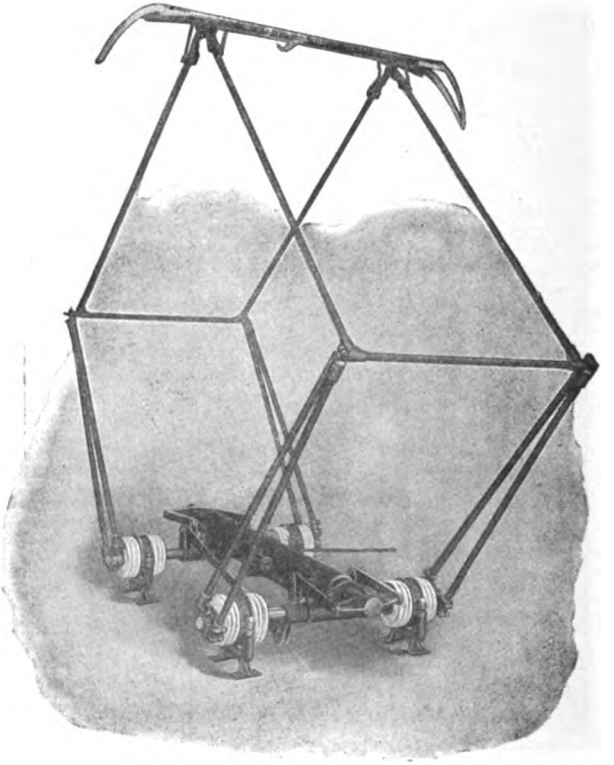

FIG. 401.—Pantagraph Trolley, Raised.

In order to make the wear even, the trolley line is staggered. The trolley is controlled by compressed air, acting against the piston which raises and lowers it, and is controlled by the motorman.

Pantagraph Type.—Owing to the danger to the overhead construction from a wheel-trolley leaving the wire at high speeds, the Westinghouse Electric & Manufacturing Company has designed a trolley of the pantagraph type with sliding shoe, as shown in the illustration. With a trolley of this form, high speeds may be maintained and no difficulty will be experienced from the trolley leaving the wire. The contact-shoe is broad and is formed of a conducting material which does not wear the wire. To insure even wear of the shoe, it is customary to stagger the trolley-line.

The trolley is operated by the motorman in his cab by means of compressed air. It is normally held in a raised position against the wire by springs, and the admission of air to the main cylinder forces the structure to collapse, thus lowering the shoe. Air is then admitted to the latch-cylinder, which locks the trolley in the lowered position. When it is desired to raise the trolley, all that is necessary is to admit a small amount of air momentarily into the main cylinder, which releases the latch and the trolley assumes its operating position. Air may be supplied from the brake-system, or, if this is not used, a hand-pump or small motor-driven pump will furnish the necessary pressure.

THE WESTINGHOUSE-BALDWIN SINGLE-PHASE LOCOMOTIVE FOR HEAVY RAILROAD SERVICE.

The weight of the locomotive complete is 136 tons. It is built in two halves, each having one six-wheel truck with rigid wheel-base. These are coupled together and are intended to operate normally as a single unit, but

each half may be operated separately if desired. The locomotive is approximately 45 feet long over all, and 9 feet 8 inches wide. The total height above the rail,

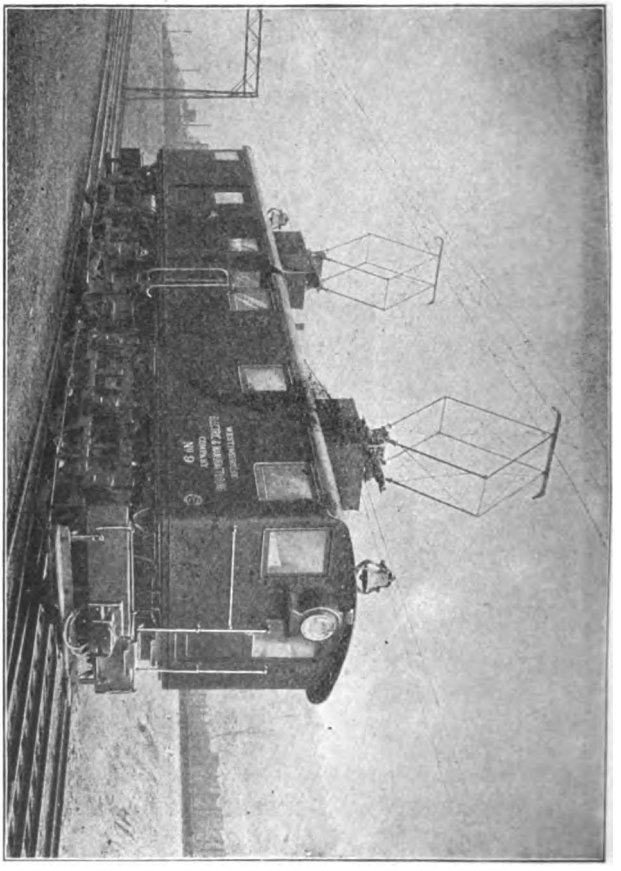

FIG. 402.—Westinghouse Electric Locomotive.

with trolleys lowered, is 17 feet. The wheels are 60 inches in diameter, and are mounted on 8-inch axles, with 6 feet 4 inches between centres. The side-frames

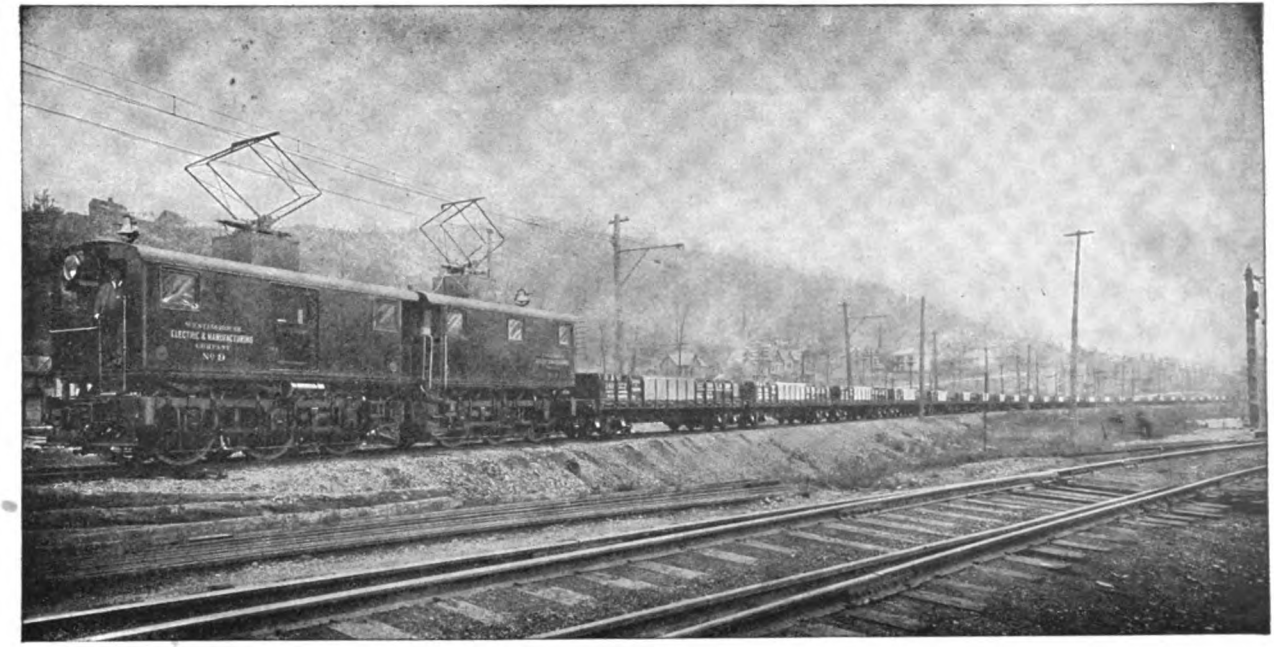

FIG. 403.—136-ton Single-phase Electric Locomotive, Drawing Train of 50 Gondola Cars on Westinghouse Interworks Railway.

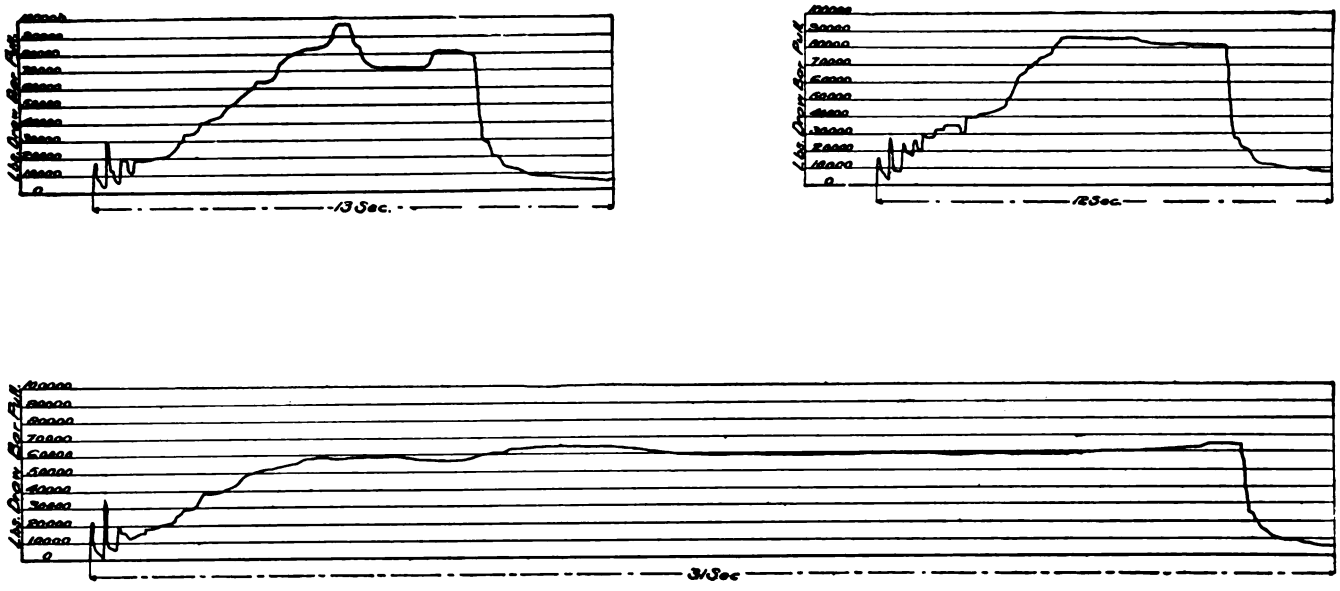

FIG. 404.—Test Curves showing Draw-bar Pull exerted by Westinghouse 136-ton Single-phase Electric Locomotive while moving a 50-car train with brakes set on the four rear cars.

Locomotive Equipment, Six 225-H.P. Single-phase Railway Motors. Weight of train, 1152 tons; weight of locomotive, 136.5 tons; total 8.5 tons. Gear ratio, 18.95; size of wheels, 60″.

of the truck are of cast steel and are spring-supported in the usual manner, the weight on the two inside axles of each truck being equalized. The cabs are built of sheet steel with angle-iron supports, and the entire cab as a whole is removable from the truck.

Each axle carries a 225-H.P. single-phase series motor of the single-reduction geared type, making a total of six motors for the locomotive. One side of each motor is supported directly on the axle, and the other is suspended by spiral springs from the locomotive body. The motors are of the same general construction as the Standard Westinghouse alternating-current railway motors of smaller size. They are so arranged that forced ventilation may be used, and increased output thus secured.

The locomotive is designed for a current of 25 cycles and a trolley voltage of 6600. Power supply is furnished from a single No. 000 trolley-wire.

The 6600-volt current is collected from the trolley-wire by a pneumatically-operated pantagraph trolley on each half of the locomotive, and is carried through a suitable oil switch and circuit-breaker to an auto-transformer in each cab. These transformers reduce the voltage to 325 for use at the motors. The trolleys may be raised or lowered from the cab by a suitable air-valve.

The three motors on each half of the locomotive are connected permanently in parallel and are controlled by means of an induction-regulator, which, under the direction of the operator, varies the voltage at the motors from about 140 to 325. The induction-regulators are driven by small-series motors of the same general type as the main motors. Both regulators are controlled by the multiple-unit system from a master-switch at

either end. They may be stopped at any desired point in heir travel, and thus the locomotive may be run at any speed with the same facility and economy as a steam locomotive.

Forced ventilation is used with the auto-transformers and induction-regulators as well as with the motors, the necessary air being supplied by suitable motor-driven blowers. Motor-driven air-compressors are also used.

The locomotive is designed for slow-speed freight service. With the motors working at nominal full-load output, the locomotive will develop a draw-bar pull of 50,000 pounds at a speed of approximately 10 miles per hour. On several occasions, however, when hauling a 50-car train, steady draw-bar pulls of from 80,000 to 85,000 pounds have been recorded on the dynamometer car,* and momentary efforts as high as 100,000 pounds have been obtained with no sign of slipping of the wheels. With lighter loads the locomotive may be run at higher speeds up to a maximum of about 30 miles per hour.

While this locomotive consists of two units, the construction permits of the addition of any number of units, all operated in unison from one position by means of low-voltage control-circuits.

Weights and Dimensions.—Weight of locomotive, complete (both halves), 136 tons; total length over bumpers, 45 feet; maximum height with trolley down, 17 feet; size of drivers, 60 inches; distance between centres of drivers, 6 feet 4 inches; extreme width, 9 feet 8 inches.

Equipment.—Six single-phase, single-reduction motors,

* See Fig. 404 for test curves.

having a normal capacity of 225 H.P. each; gear reduction, 18·95; induction-regulator control; pneumatically operated trolley; combined automatic and straight air-brakes; pneumatic sanders, to sand tracks in both directions.

General Data.—Trolley voltage upon which locomotive is designed to operate, 6600 volts; voltage on motors, 140–320; draw-bar pull, 50,000 pounds, at a speed of approximately 10 miles per hour; maximum speed for which locomotive is designed, approximately 25–30 miles per hour.

Electric Line Construction on Interworks Railway.—3000 feet double catenary line-construction; supports consist of three-track iron bridges and bracket-arm iron-latticed poles; spans on bridges, 250 feet; spans on poles, 200 feet; five miles of single catenary bracket-arm and wood-pole construction; length of spans on straight runs, 120 feet; size of steel cable, 7–16 inch; size of trolley-wire, 000 grooved; insulation, porcelain throughout; trolley-wire horizontal supports placed every 10 feet.

GENERAL ELECTRIC A.C. SYSTEM FOR LOCOMOTIVES AND GENERAL SERVICE.

The single-phase system adapts itself to existing systems on the three-phase principle. As the cycle adopted is that of twenty-five, the consequence is that at the existing substations of a three-phase system there can be installed three-phase to two-phase transformers, connected two-phase on the secondary side and feeding

separate trolley sections from the two phases, from which single-phase locomotives can be operated. Fig. 405

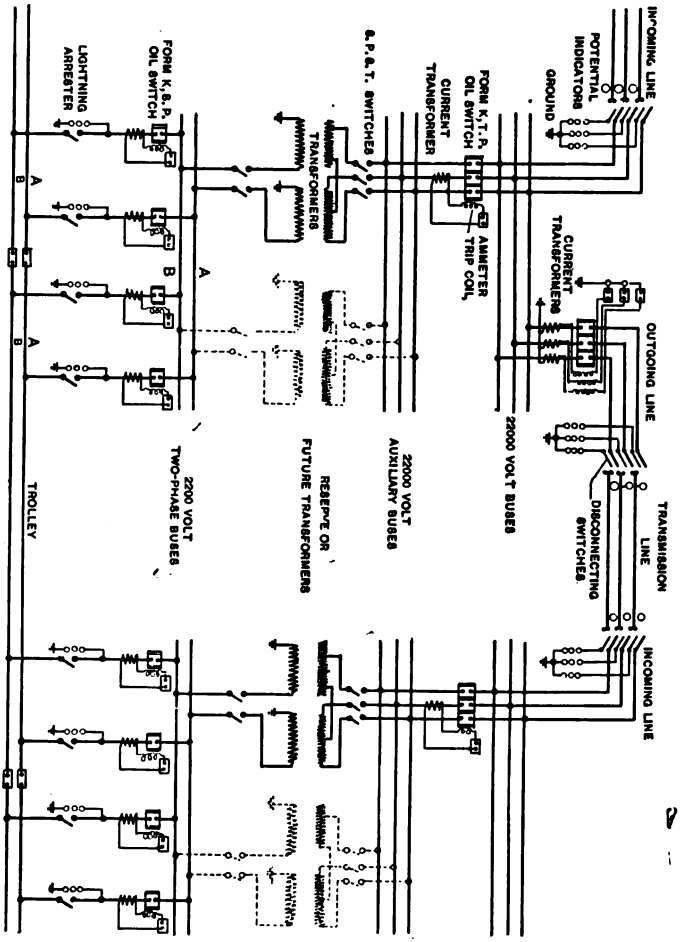

FIG. 405.—Three-phase to Two-phase to operate Single-phase Locomotives.

shows this method. Fig. 406 is a diagram of the General Electric Co.'s single-phase transmission system.

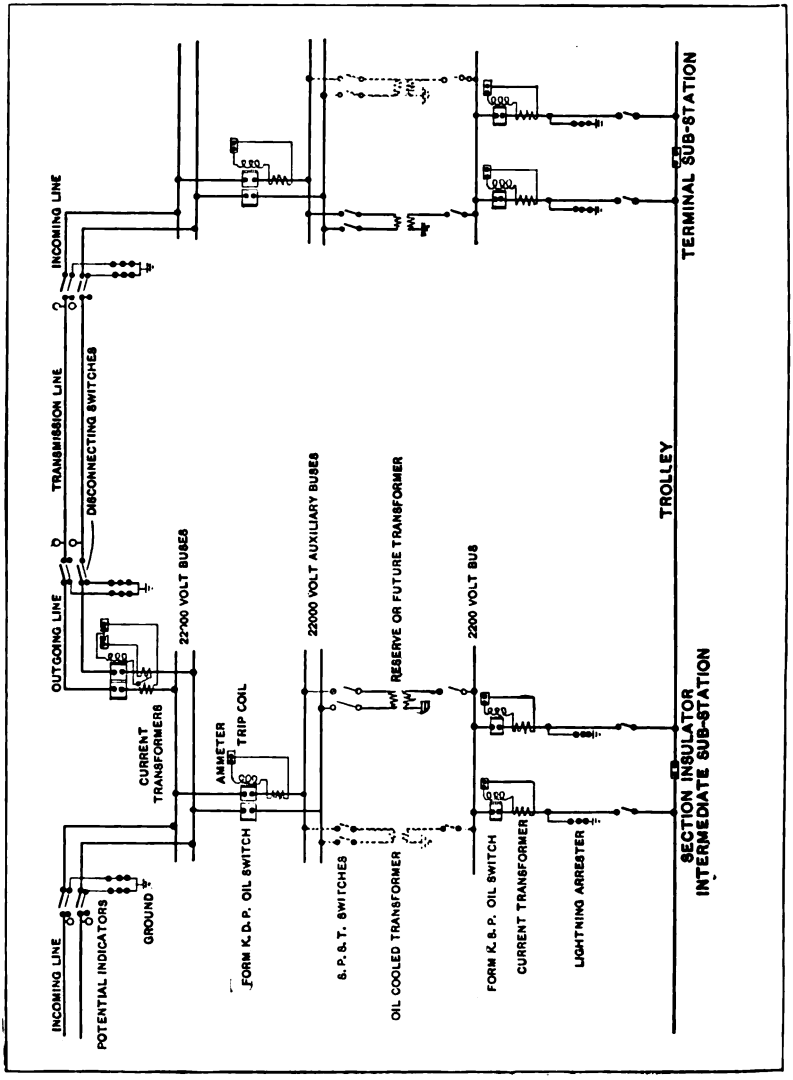

FIG. 406.—General Electric Single-phase Transmission System.

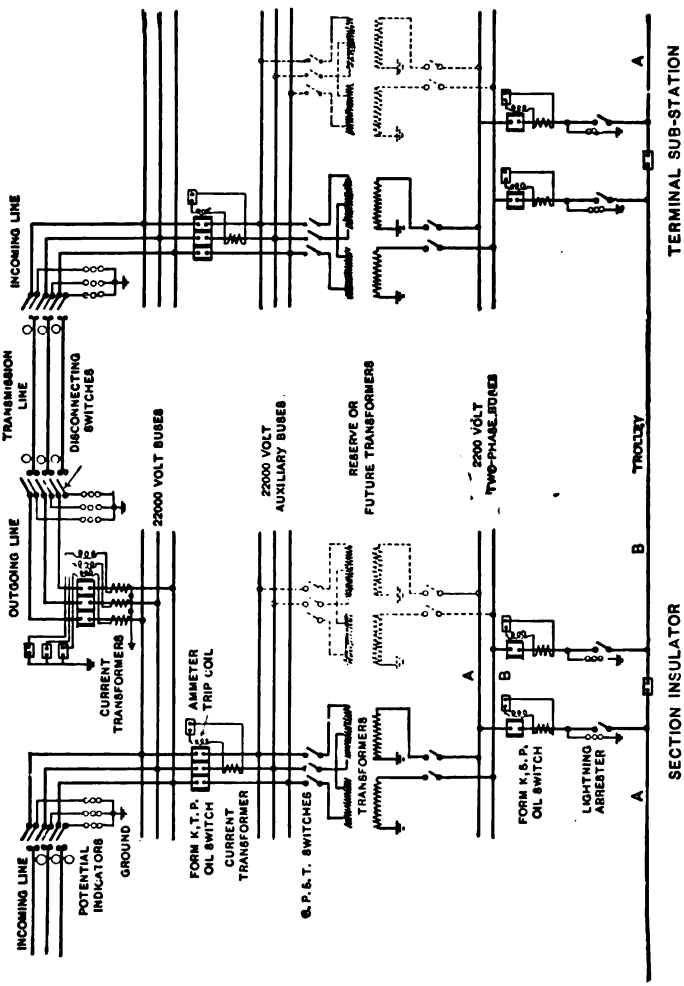

FIG. 407.—General Electric Single-phase Transmission System for Single-phase Locomotives.

Motor. (Fig. 408.)

As the single-phase alternating motor makes the single-phase system possible, the general design of that motor is along the same lines. The G. E. motor is a compensated motor and consists of an annular laminated iron

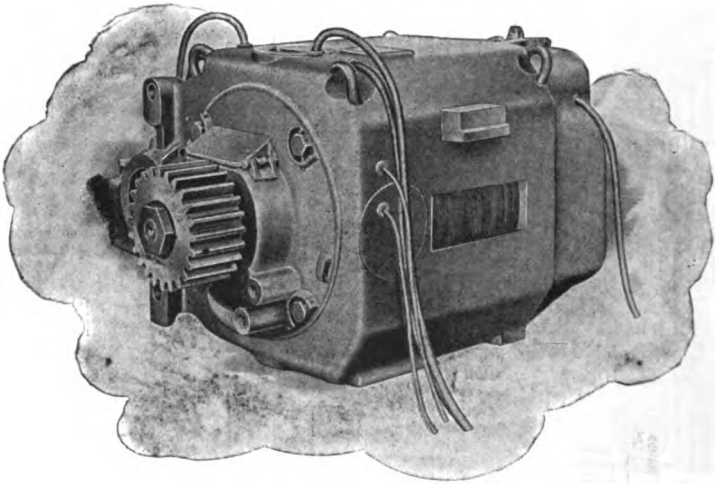

FIG. 408.—General Electric Company's Compensated Motor.

field with a distributed winding, the winding being distributed over the laminated core as in an induction motor, and not wound on a projecting pole as a field coil. The distributing character of the field winding compensates for any armature reaction and prevents sparking at the brushes. It is a series commutating motor and varies the speed with the load, and when used on a locomotive the two motors are connected permanently in series, starting four in series, operating two in series parallel. These motors are wound for 200 volts and are fed from a 400-volt transformer carried on the locomotive or car.

The armature and the commutator of these motors are similar in construction to those of the standard direct-current motors.

Transformers.

In this system the transformers carried on the locomotives have two windings, the primary and secondary,

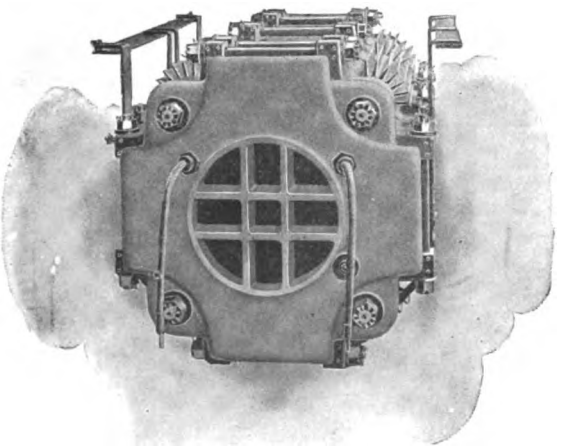

FIG. 409.—Step-down Transformer, End View.

as in the usual reducing or step-down transformers. Fig. 409 shows the outward appearance of this transformer. It is air-blast cooled, and of 80 kw. capacity. The primary voltage as delivered at the substation is 22,000 volts, stepped down on the secondary side to 2200 volts, which is applied to the transformer's primary on the locomotive, while this applied voltage may be higher as the circumstances require. This transformer is carried under the locomotive or within the body. All primary leading-in tubes are carried in brass tubing, which is

grounded, a precaution against injury to operators and mechanism. This transformer supplies current to operate the air-compressor motor, lighting, and heaters.

Control.

The method of control used in this system is the series parallel, using standard series-parallel controllers with

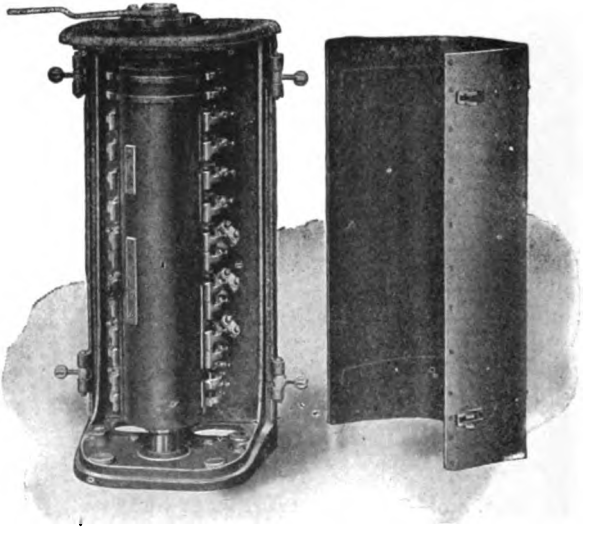

FIG. 410.—Commutating-switch.

the addition of a commutating-switch. There are two circuit and two trolley poles, one for the direct and the other for the alternating current. These circuits are opened or closed by an oil-switch. This oil-switch is interlocked with a commutating-switch, one being in the high-tension alternating current and the other in the direct-current circuit. This interlocking is so arranged that only one switch can be closed at a time and the commu-

tating-switch can only be thrown when the oil-switches are in off position. This will prevent trouble should both trolley poles be up at the same time.

Commutating-switch.

The commutating-switch is placed between the trolley and the series-parallel controllers, as shown in Fig. 410, and is used in changing from either A.C. or D.C. circuit.

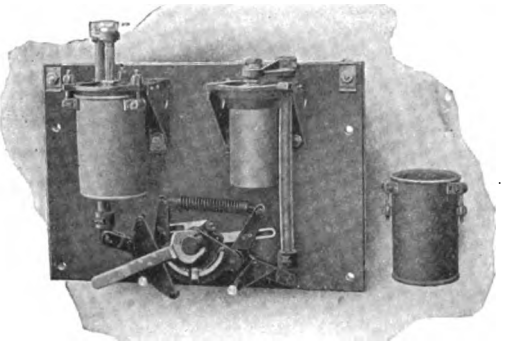

FIG. 411.—Oil-switch.

This switch is similar to the standard controller in form. As shown, the change is made by rotating the cylinder and bringing the connectors in contact with the terminal fingers of the various circuits.

The Oil-switch.

This switch is shown in Fig. 411 and is of the plunger type, the one terminal receiving the movable member which projects through the upper head of oil-chamber, and is connected to a non-conducting rod which is attached to a bell-crank lever. The switch-terminals are

surrounded by a heavy porcelain cylinder. This cylinder and the terminals are immersed in oil by a casing which surrounds and is filled with oil and supported by the upper end of porcelain. These switches are operated by a lever and made quick-acting by a tension stored up in a spring connecting the two bell-cranks upon movement of the lever.

Series-parallel Controllers.

A series-parallel controller is one that so makes the various connections between trolley and motors that at first the motors are run all in series; that is, the same current passes from one motor to the other and in the second change the current divides, part going through two motors in series across the circuit or with the four motors in series parallel. (See Fig. 413 for the several combinations.)

The construction of the series-parallel controller is shown in Fig. 412. The casing contains the main and the reversing-cylinder. The reversing-cylinder is to the right in the cut. The terminal board is below the reversing-cylinder. The barriers which project between the fingers swing on a hinge and around which is wound the magnetic blow-out coil. The contact-fingers are to the left of the main cylinder. This cylinder carries contact-strips or segments of a circle, in various lengths and positions in relation to cylinder-stem, and contact-fingers are interconnected so as to get the various combinations of motor control when the cylinder is rotated and the contact-fingers are brought in contact with the cylinder segments. The purpose of the magnetic blow-out is to suppress any arching at the contact-fingers when leaving

a segment. The cylinder is rotated by the lever on top known as the controller-handle. The reversing-cylinder is constructed upon a similar order. Fig. 413*a* gives the complete wiring for a locomotive using this controll

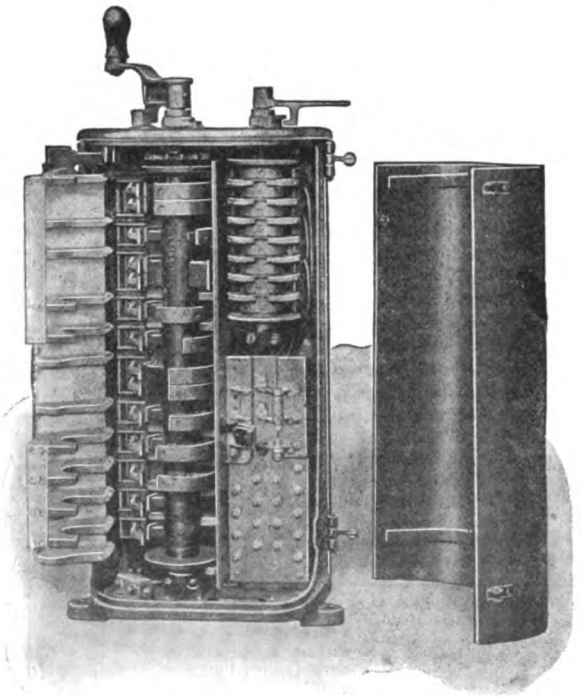

FIG. 412.—K-28 Series-parallel Controller.

showing the cross-connections in main- and reversing-cylinder segments; the connections to contact-fingers to the left, which include the trolley circuit; the connection to terminal board and cut-out switches; the connections to reversing-cylinder from terminal board and cut-out

MOTOR CONNECTIONS FOR 4-A C MOTORS USED ON BOTH A C AND D C SERVICE

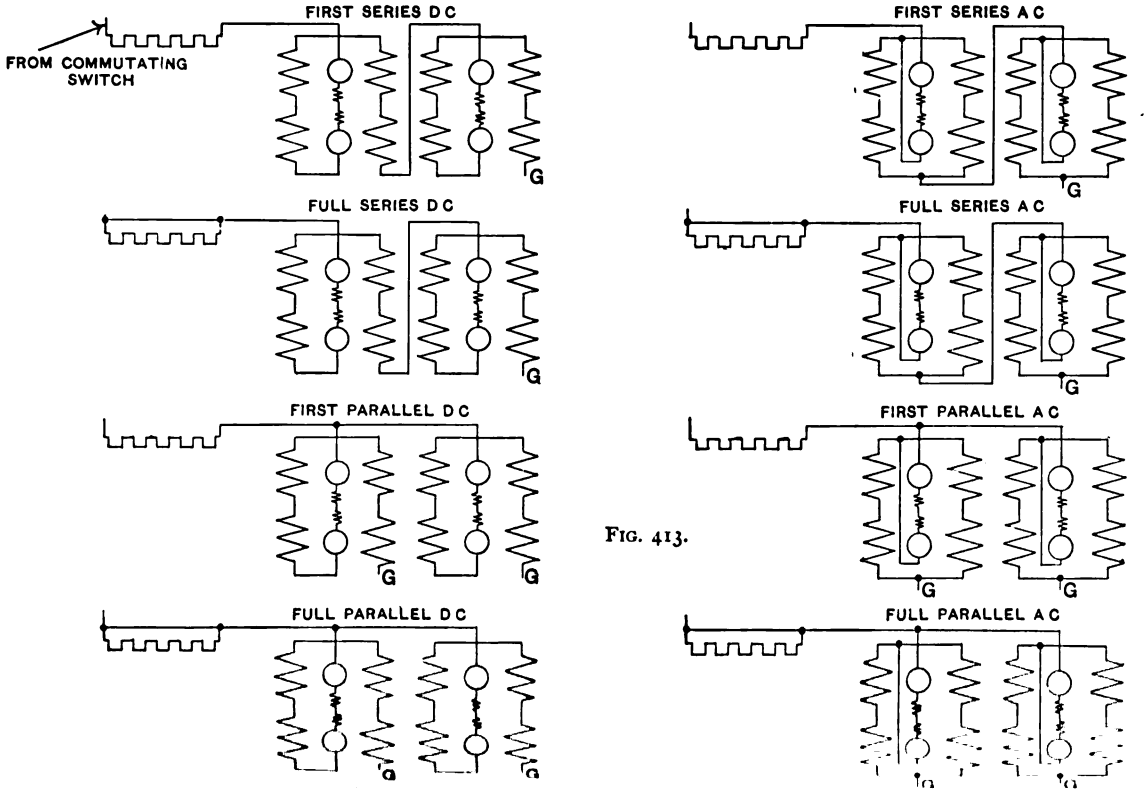

FIG. 413.

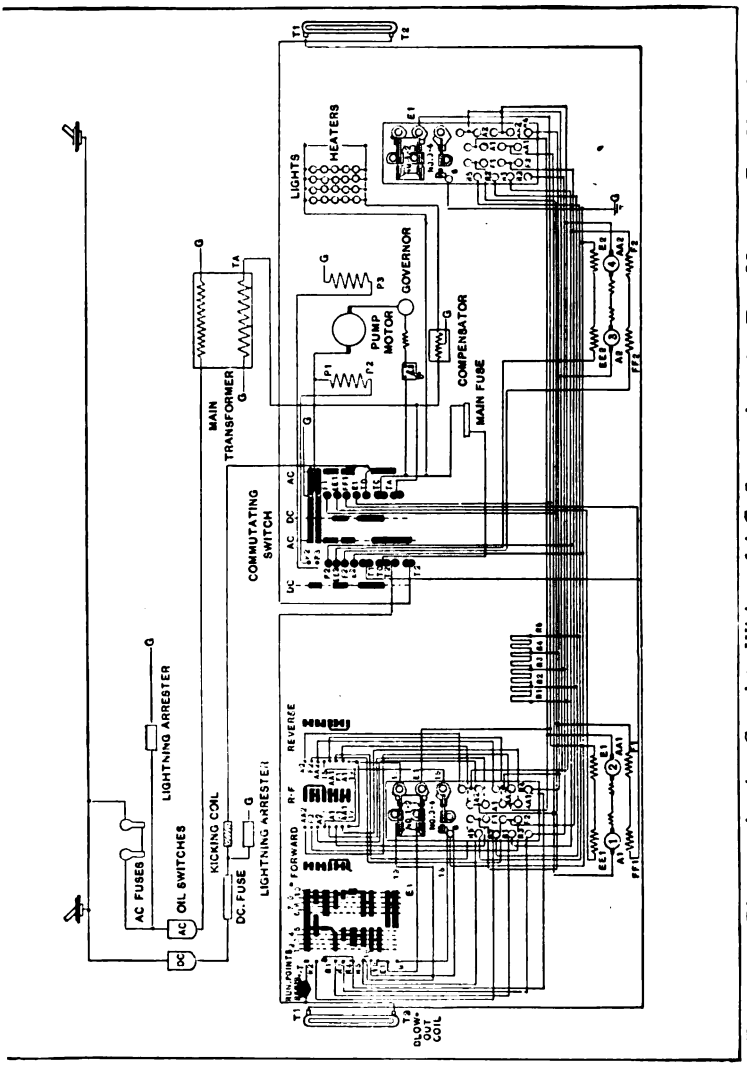

FIG. 413a.—Diagram showing Complete Wiring of A.C. Locomotive using Four Motors. Capable of operating on Alternating and Direct-current Systems. (G. E. Co.)

switches, and from terminal board to motors; the diagram of the commutating-switch and connections, pump, motor, and governor, main trolley circuits, and transformer connections. The reversing-cylinder is for the purpose of changing the direction of rotation of motor armature by changing the direction of the current flow through the armature. The principle is that the current must flow in an opposite direction in one member only to that in which it had been flowing in order to change its rotation and polarity. If the current flow was reversed in both field and armature, the motor would still rotate in the same direction as before. The segments are cross-connected in the cylinder, so that when the armature lead contact-fingers come in contact with the segments on reverse cylinder in the reverse position the current will flow through the opposite brush into armature from that in which it had been flowing, changing the polarity of the armature. The same can be done with the fields, the current flowing in the same direction as before changing in the armature, while the current flow in the fields would be reversed, changing their polarity.

ELECTRIC LOCOMOTIVE ON VALTELLINA LINES (ITALY).

Induction Motors.

This line uses 3000 volts on the overhead trolley with a 20,000-volt transmission from power station to substations. The electric locomotive represents the latest type and incorporates constructions different from those shown in previous types. The outward appearance is similar to other electric locomotives. There are six driving-wheels coupled with a leading and a trailing pony wheel. The motors in this

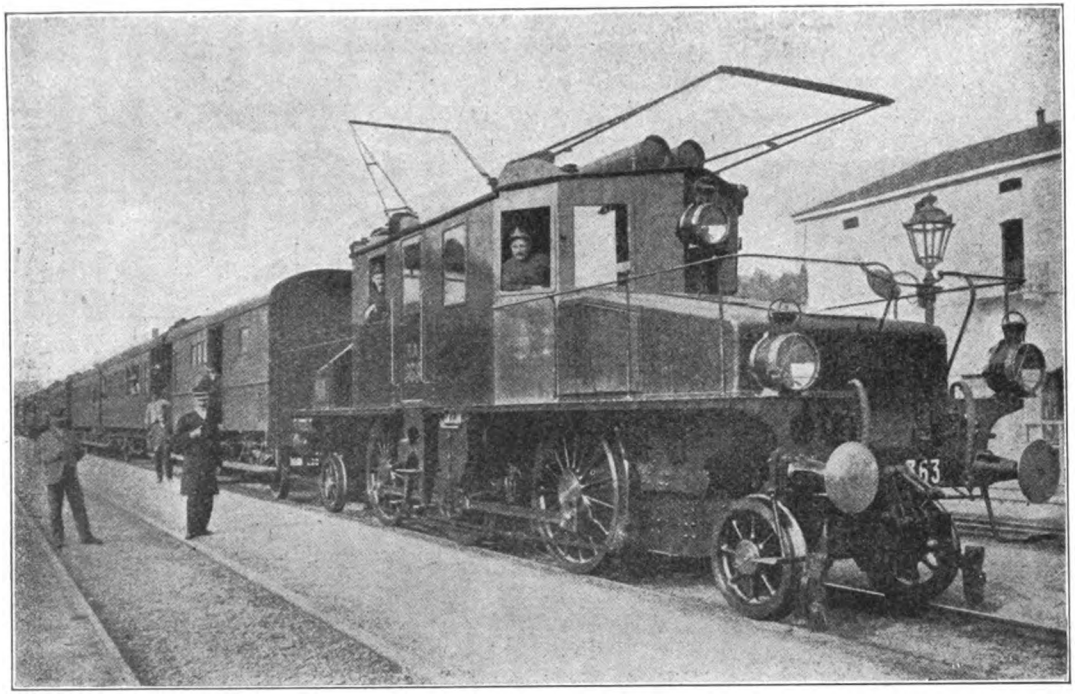

FIG. 414.—Electric Locomotive, Valtellina Lines, using Induction Motor.

locomotive are polyphase motors or three-phase induction motors. This requires two trolley wires and the rail for the three phases. The current is taken from the trolley wires by a trolley having rollers of aluminum with truncated cone ends. The rollers are mounted with insulated ball-bearings and have a speed of several hundred revolutions per minute, being only 3 inches in diameter. On top of the locomotive is placed a cast-iron base which carries a frame supporting the trolley-roller poles and a system of springs as well as the pneumatic controlling apparatus which is supplied with compressed air from the electric compresser driven by a 5-H. P. motor (100 volt, three-phase). The locomotive is equipped with two trolleys and so placed as to bridge two sections of trolley wire. From the trolley the current is conducted through insulated cables and conduits or pipes which are grounded to the stator windings of the main induction motors. The rotors in the armatures of the main motors are connected through step-ring brushes and flexible cables to controlling switches and then to the primary winding of two other induction motors which are necessary in this method of control and operation. This system and locomotive were devised and built by Ganz & Company of Budapest and are called the Cascade or Tandem system.

The secondary or rotor circuits of the motors are connected with liquid rheostats. The operation required in connection with the high-tension 3000-volt circuit is the closing of a switch connecting the trolleys with the primary windings of the main motors. The controlling and operating of the locomotive is done by the manipulation of the controller regulating the low-tension induced

current which puts the motors in cascade or direct connection as desired. An air-valve is used which regulates the height of the liquid in the rheostat, which is made up of a series of iron plates which are gradually immersed in an alkaline solution which is forced into the rheostat. When the solution reaches the top of the resistance-box a float operates the air-valve and the three armature windings are short-circuited by switches operated by compressed air. Two rheostats are provided on each locomotive. To increase the resistance the sodium carbonate solution is raised and the plates submerged.

Motor Operation.

Each of the trucks carries two motors, one high-tension and the other secondary or low-tension, each connected to an axle, a special elastic connection being used. In starting the high-tension, 150-H. P. motors are connected in tandem with the small induction motors or in cascade. The primary of the large motor is connected with the three-phase lines. All of the high-tension apparatus is locked in a case and connot be opened while the trolley is in a raised position. The secondary of the 150-H. P. motor for starting and slow speeds is connected to the primary of the small motors, and the variable resistance of the rheostat is included in the secondary of the small motor, which acts the part of the large rheostat. Instead of wasting the energy in the rheostat, useful work is done, the armature of the small motors helping accelerate the locomotive in starting. The two small motors are used only in starting and stopping and in climbing grades, for which they are connected in cascade with the high-tension induction motors. The ratio of transformation

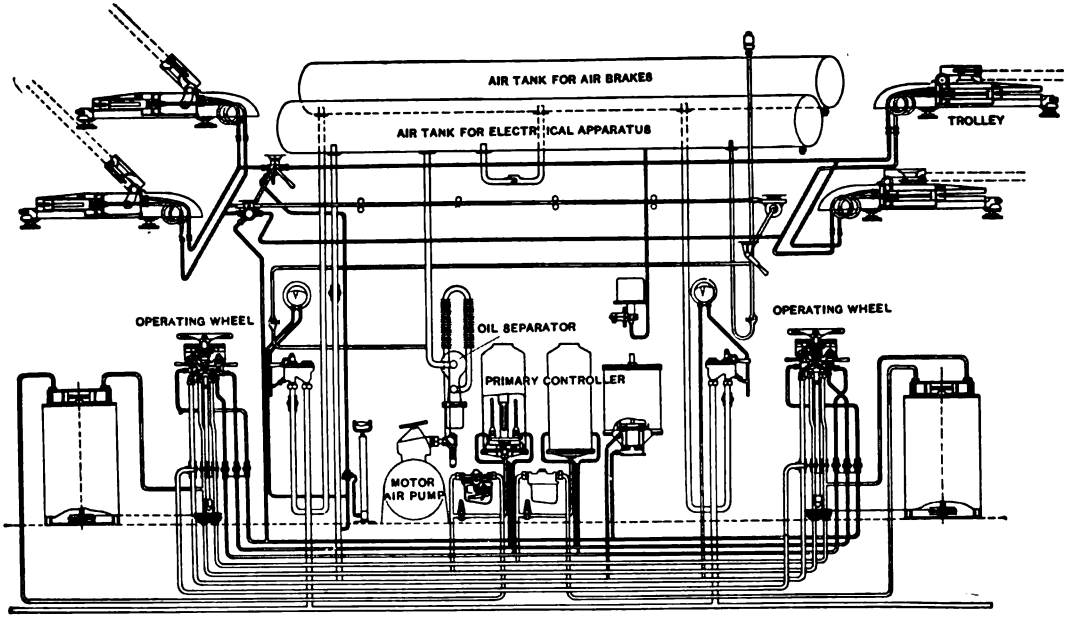

FIG. 415.—Diagram of Pneumatic System for operating Switches, Controllers, Rheostats and Trolleys, Valtellina Locomotives.

in the large motors is 10 to 1, which gives 300 volts in the secondary or rotor winding, and the current induced in the armature is led into the field of the low-tension motor which is connected to the starting resistance-box. The second or small motor is cut out when the acceleration has reached an angular speed corresponding to 0.5 or one half the frequency of the alternating polyphase current. For normal speed it is about 60 per hour.

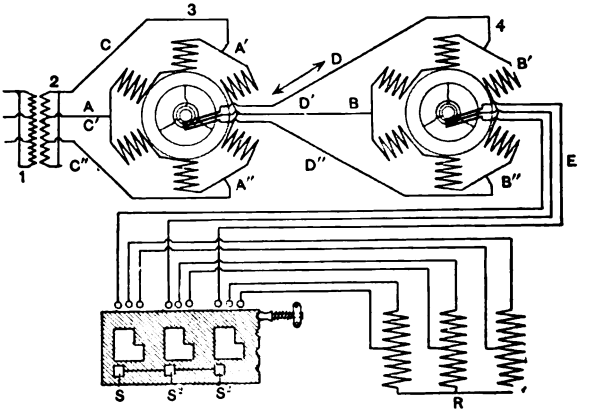

FIG. 416.

The two large motors alone are in circuit, and the controller is arranged so that the liquid resistance may be connected to the secondary winding of the large motors at the moment that the samll ones are disconnected, remaining in circuit and being gradually cut out until full normal speed is reached, when the secondaries of the two large motors are short-circuited by the rheostat automatically. The locomotive carries the four motors connected directly to the axle, but flexibly, and they are coupled two and two in tandem, which provides a speed

for the rotors which is one half of that of the rotating field of the primary, so that two speeds are possible.

The controlling apparatus consists of trolley, valves, air-compressor, switch for the five-horse-power motor, and the starting-switch. The main switch is the controller for the low-tension circuit. An eight-kilowatt transformer is connected to the distribution-box in the motor-

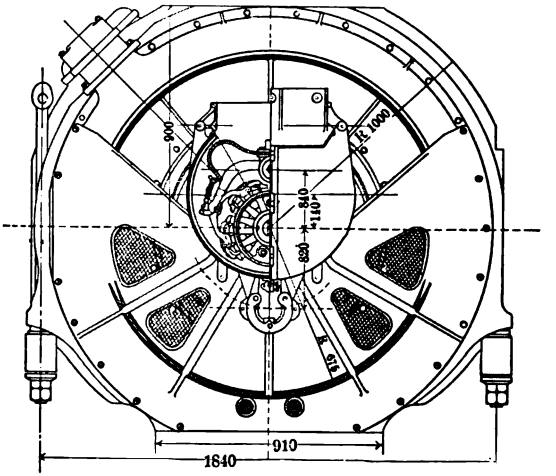

FIG. 417.—End View of Induction Motor, Valtellina Lines.

man's cab. This transformer reduces the 3000-volt trolley current to 100 volts for operating the lights, heating, ventilating, driving the motor and air-compressor. Fig. 415 is a diagram of the pneumatic control for operating the switch mechanism on the locomotive which requires an extensive amount of piping. The air-brakes used on these locomotives are the Westinghouse, and are so arranged that it is impossible to run if they are not in proper working order. As air-pressure mus

be used to raise the trolley to the wire, the trolley-poles are connected by levers to a piston working in a cylinder at the base, which is a part of the trolley base, and any failure of current will cause the brakes to be applied instantly and the locomotive stopped. Fig. 416 is a diagram of the connections of the motors, showing the circuits from one motor to the other in tandem, and through rings and brushes of the rotors circuits to regulator, and resistance. Fig. 417 is a diagram of the motor used on this locomotive, showing an end view with half the case over rings broken away to expose rings and brushes. This locomotive will haul a passenger train of 250 tons or a freight train of 400 tons, the former at the rate of 30 to 60 and the latter at the rate of 15 to 30 miles per hour, depending on the grades.

HIGH-SPEED LOCOMOTIVE, THREE-PHASE SYSTEM, USING 10,000 VOLTS ON THE LOCOMOTIVE. SPEED, 125 MILES PER HOUR. *

General Design of the Car.

Two conditions were imposed upon the builders of the car: first, the capacity had to be 1000 horse-power; second, the maximum weight was to be 96 tons. No restrictions were placed on the electrical equipment nor the length of time the apparatus was to be kept in service. There is very little data at hand which would assist the designers in determining the proportions of the various electrical devices to meet the desired requirements, but in view of the magnitude of the latter it would appear that the equipment should be as heavy as is permissible

* High-speed Locomotive, 125 miles per hour. By Walter Reichel, Chief-Engineer, Siemens & Halske Company.

within the limits of the prescribed weight of the car, in order to meet the requirements with safety.

In this manner the problem was approached, and the final execution of the plans was the result of numerous designs and calculations (especially of weights), the mechanical and electrical devices being altered in size and

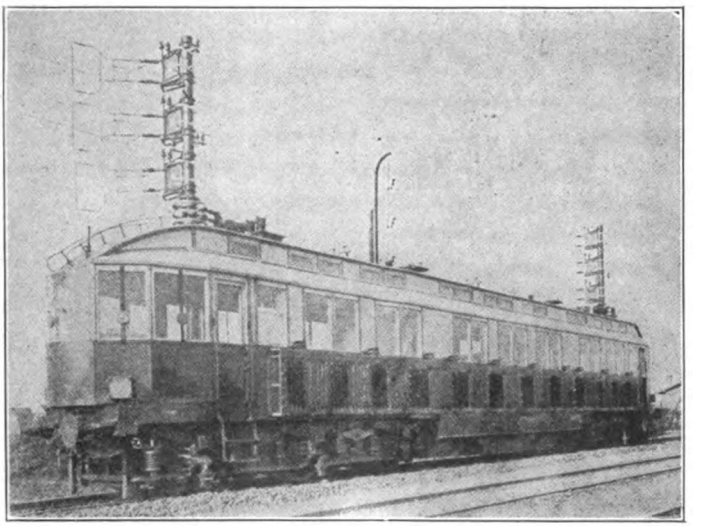

FIG. 418.

capacity and shifted about as was deemed most expedient.

The following table shows the distribution of the weights of the various apparatus.

MECHANICAL PORTION.

	Pounds.
Car body, iron frame and metal substructure, wood, glass, seats, hand-brake with appurtenances, air-brake with pipes and reservoir, floor and roof covering	45,540
Trucks complete, including wheel-base, auxiliary air-reservoirs, and brake-cylinders and brake-shoe	60,060
Total	105,600

ELECTRICAL PORTION.

	Pounds.
Motors, without axles and wheels, but including support	35,860
Complete rheostat controller	11,220
Controller with pneumatic attachment, electrical circuits, safety devices, fuse-boxes, switches, and levers for motormen	10,450
Large transformers and their support	27,060
Air-pumps and supports	2,200
Small transformers for the same	1,430
Current collector with attachments	2,860
Lighting devices, including battery	1,100
	92,180
Adding for safety	1,320
Total	93,500

PASSENGERS.

Fifty passengers, including motorman and conductor at 80 kg. (176 lbs.)	8,800
Total	8,800

Adding these we get

$$48{,}000 \times 42{,}500 \times 4000 = 207{,}900 \text{ pounds,}$$

which is equal to 94.5 metric tons.

In apportioning the various weights the electrical equipment in the car body was made as light as practicable, and it was so distributed that the car-body support might be made as light as possible. This will be evident from the following detailed drawing of the car construction and equipment, shown in Fig. 419.

The Mechanical Equipment of the Car.

The requirements of the car body are that it shall be of such a size as to accommodate 50 passengers, who are to be provided with cross-seats in a centre compartment, called salon, and two rooms adjoining the salon. The central room is 24 feet in length, contains 18 seats, while

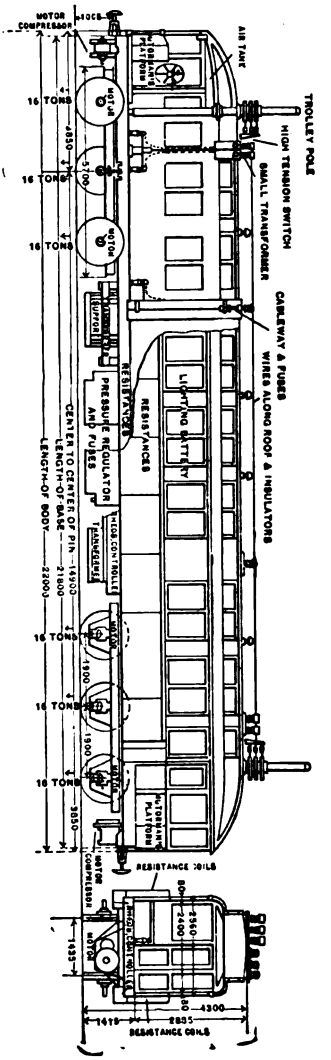
MOTOR COMPRESSOR
AIR TANK
TROLLEY POLE
HIGH TENSION SWITCH
SMALL TRANSFORMER
CABLEWAY & FUSES
WIRES ALONG ROOF & INSULATORS
LIGHTING BATTERY
RESISTANCES
PRESSURE REGULATOR AND FUSES
SUPPORT
MOTOR
16 TONS
CENTER TO CENTER OF PIN 14900
LENGTH OF BASE 21800
LENGTH OF BODY 22000
RESISTANCE COILS
RESISTANCE COILS
4300
2835
1415
1435

FIG. 419.

the adjoining compartments are 13.12 feet long, and each has a seating capacity of 12. Adjoining these sections is the anteroom or platform, on which there are three seats 5.74 feet in length. From this platform passengers enter and leave the car. Finally, there are the two platforms (one at each end) for the motorman, which are 5.24 feet in length. The car has, therefore, 48 seats and is 24 yards in length.

The body is carried on longitudinal girders, which are joined together on top and bottom, thus being light in weight, but capable of bearing a heavy load. The plates joining the girders are composed of U and flat iron, and are connected by heavy sheets of iron reaching from the lower end of the windows to the lower edge of the car body.

Besides the above, the frame is braced transversely and longitudinally in the usual manner, the arrangement of which depends largely upon the location of the various electrical apparatus. At the front and rear end couplers and bumpers prescribed by the Prussian Railroad Department are attached.

The interior arrangement of the several sections and the entire car body is the same as that of a third-class car of the Prussian State roads. The seats are made of wood and are fixed to iron supports. The car greatly resembles in outward appearance the ordinary train-car, except that the front and rear ends are of special parabolic shape so as to reduce the resistance to the air. The roof also slopes down in front and back. The entire body can be mounted into the truck-frame without the use of springs, by means of a projecting-pin. The truck-frame, however, is spearated from the journal-boxes by a double

set of springs. The structural iron truck-frames primarily rest upon spiral springs, which are adjustable by means of a bolt. From these the load is transferred to long, flat springs which rest on the journal-boxes. The middle one of the three axles is not used for the mounting of the

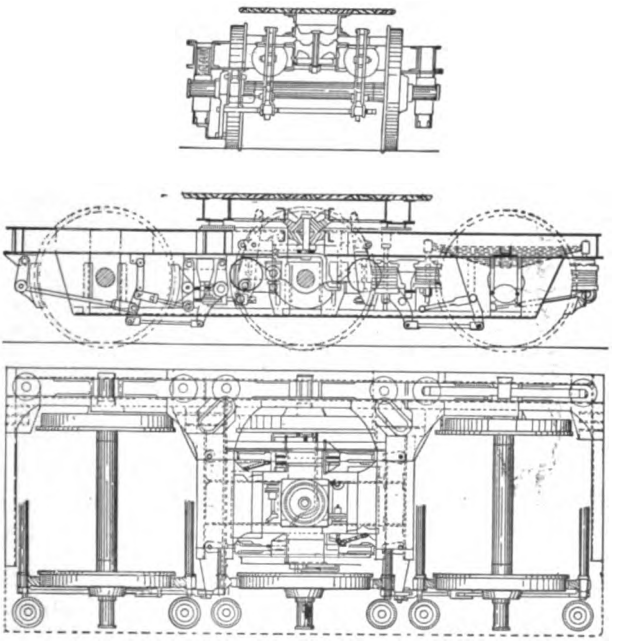

FIG. 420.

motor, because the space above it has to remain free for the supporting frame for the pin in the car body and the braking apparatus. In order, therefore, to have an equal load on all the axles the springs for the running axles must be stronger than those for the motor-axles. All of this is clearly shown in Fig. 420.

The braking is accomplished by an automatic Westinghouse brake, and all wheels are braked on the two sides, so that 100 per cent. of the weight of the car is braked. For this purpose two 10-inch brake-cylinders are built into each of the trucks. In this way each truck is a distinctive operative vehicle by itself, and each has in addition two auxiliary air-chambers. The various brake-rods of the Westinghouse brake may furthermore be acted upon by a hand-brake, by means of which the motorman, stationed at either end of the car, can brake about 80 per cent. of the total weight of the car. The outside diameter of the wheels is 48.21 inches. The truck is shown in three views in Fig. 420.

Electrical Equipment of the Car.

The following conditions have to be complied with in the design of the electrical equipment. In the first place, the passengers and employees must be adequately protected against the danger of high-tension currents. This is only possible when all apparatus and wires are situated under the car floor or under the roof, which are connected to the earth by means of sheet-metal plates. None of the apparatus is to made directly operative by the motorman's hand, but by means of a special power device. This also simplifies the operations, and does not tax the strength of the motorman. Compressed air seems well adapted for this purpose, as it has to be carried on the car for the operation of the brakes. The air-reservoirs for power and brake purposes, however, must be separate.

The equipment must be so arranged that all parts can be easily inspected, be easily attached and removed, and,

in case any device becomes inoperative, part of another the equipment can supply the deficiency. The load must furthermore not all be concentrated at one point, but must be evenly distributed, the effect of which will be that the heat which is generated will be more easily dissipated.

Compliance with these conditions made it necessary from the start to divide the electrical equipment into two

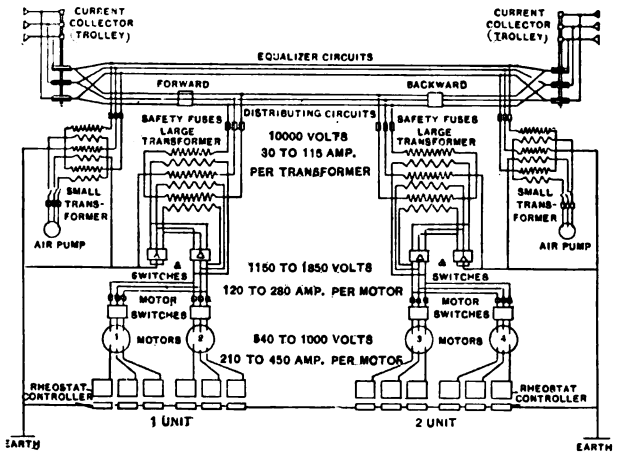

FIG. 421.

distinct units, each one containing two motors, with two rheostats, two main switches, two fuses, a large transformer, with delta and star switches in the secondary, and primary high-tension switches as well as high-tension protective device; an air-pump and small transformer with fuses, a current-collector (trolley), an air-reservoir, a motorman equipment, with compressed-air switches and measuring instruments. How these de-

vices are connected is clearly shown in the diagrams, Figs. 421 and 422.

Although the diameters of the wheels have been made 125 cm. (48.21 inches), the number of revolutions made by the wheels is still so great that it has been deemed advisable to mount the motors directly on the axles. Each truck is supplied with two motors, the entire car, therefore, with four, so that each motor only has to furnish one-fourth of the entire 1000 horse-power.

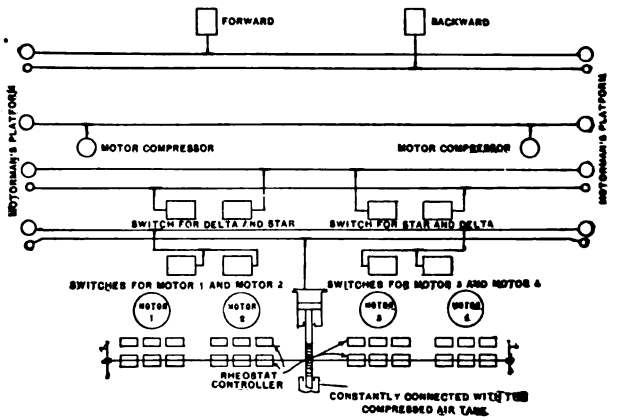

FIG. 422.

In order not to consume too much time at starting it has been calculated that the motors must be capable of furnishing 3000 horse-power. The increased capacity is usually obtained by loading the motors more heavily. In case one equipment is disabled, however, the pressure in the primary circuit of the motors will be raised. The pressure has to be so chosen that the current strength will not be too great, so that the contact surfaces of the motor-switching devices will not be too large. The pri-

mary pressure for full speed has therefore been chosen as 1150 volts and for starting as 1850 volts. The motor speeds are regulated by means of resistances which are inserted in the secondary circuit of the motors, and are cut out successively until the induced winding is entirely short circuited. The secondary voltage at a standstill—*i.e.*, at the point of starting—is about 650 volts.

So as to avoid a possible breakdown metallic resistances are employed. On account of the excessive room which they occupy, and in order to insure their cooling off, the resistances are inclosed in flat cases, which are placed along the two side walls of the car between the two doors.

In order to make the connections between the resistance-coils and their controllers as short and simple as possible the controller-cylinders are distributed in a similar manner to the coils themselves. For this purpose the space below the resistance-boxes between the two trucks was utilized.

The controller-cylinders are operated mechanically, and as the power required is quite considerable, an auxiliary compressed-air mechanism can be brought into action. At all times, however, the motorman has perfect control over the cutting in and out of the coils.

As stated above, the motors receive a primary voltage varying between 1150 and 1850 volts. The resulting currents are sufficiently low to be easily carried by the contact surfaces, and especially if there is a separate controller for each motor. This has the added advantage that in case a motor becomes inoperative it can be cut out of the circuit by its own controller.

The varying voltage is obtained by means of the delta

and star connections of the transformer secondaries, of which there are two. Each transformer has its delta and its star-connection switch. These devices are similar in shape, but differently connected. Four switches are placed together into one case, which, for inspection, can be easily removed from the car. The lighter cases and apparatus are symmetrically arranged in the centre of the car, while the heavy transformers are attached as closely as possible to the trucks, so that the frame supporting the car body is well utilized. The switches are operated by air pressure, which is controlled by the motorman. The safety devices are likewise placed in the switch-case.

Each of the two transformers is not, as is usual, formed like an equilateral triangle, but the three legs are simply laid flat, next to each other. Their lengths, in order to be able to establish cooling currents, are coincident with the length of the car. In this way the transformers can be placed under the car floor. The primary windings of transformer, which receive a pressure of 10,000 volts, are permanently connected in star (Y) fashion, and are cut in and out of circuit by means of a high-pressure switch which is situated near the trolley directly beneath the car roof. The connections between these switches and the transformers consist of bare wires mounted on high-pressure insulators, so as to facilitate inspection. They are run for a short space along the roof and then down an iron cableway 20 inches in width, which also serves for ventilating purposes. These cableways adjoin the walls separating the central from the end sections; the safety devices are located at the top of the cableway, and right above the wall separating the end sections from the platforms is an

iron trough containing a small transformer for the air-pump and a high-pressure switch, all of which can be clearly seen in Fig. 421. These last-named switches serve also for altering the direction in which the car is to run. For that reason only one of them is closed at a time, and, as seen in the diagram, all the energy for the operation of the car must pass through this switch.

The current-collectors, or trolleys, must operate without sparking, if possible, and must be separated a considerable distance from each other. As the trolley-wires are suspended vertically beneath each other at the side of the track, the current-collectors swing in a horizontal plane around a vertical axis. This axis consists of a stout pole which is almost directly over the centre of the truck, measured from side to side, so that the current-collectors do not have a very large reach. The trolley-pole and its controlling mechanism reaches down to the motorman's platform, from which place it may be revolved in any direction.

The current passes from the contacts into collector-rings, from which it is taken off by means of brushes which are connected by wires with the high-pressure switches. The upper part of the pole, together with the collector-rings, can be taken off, while the lower portion remains in the car body in its bearings.

The air-pumps are located under the motorman's platforms, and are supplied with current from the small transformers, ratio 10,000:110.

To the dashboard, in front of the operator, a switch-board is fastened, on which are located the various cocks which connect the air-pressure cylinders of the devices either with air-pressure reservoirs or with the outside

air. The cocks are turned in this order when starting up: "Forward" or "backward," then "motors" and "rheostat controller," and the reverse order when the car is to be stopped. On the board is also the cock for the Westinghouse brake, the switch for the air-pump, and near the table the measuring instruments for air pressure, voltage, current, and speed.

The car is electrically lighted by means of a storage battery and in case of necessity stearine candles can be used.

Line Construction.

The trolley-wires are suspended in a manner similar to that employed on the Siemens & Halske experimental road at Grosslichterfelde. The trolley-poles are located 7.38 feet from the centre of the track, and the three wires are each separated 3.28 feet from each other. The lowest wire is supported 18 feet above the surface of the rails. The total line is divided into sections 0.621 mile in length, and at the centre of each section is an auxiliary feed connection. At the end each section is connected by means of an insulator to a heavy pole. The zero-point of the system is grounded—*i.e.*, it is connected with the earth and track. Lightning-protective devices have been provided, and, in case a wire should break, the current is cut off from it before it falls to the ground. The feeders are connected to the trolley-wires in the neighborhood of Marienfelde.

NEW YORK CENTRAL ELECTRIC LOCOMOTIVE. BUILT BY GENERAL ELECTRIC COMPANY.*

Fig. 423 shows the latest design in electric locomotives, which embodies all the modern improvements in opera-

* Current is delivered to this locomotive by the system illustrated in Fig. 394.

ting such machines electrically. This locomotive is for passenger service, hauling heavy trains at high speed, and is the outcome of the desire to employ electricity on steam-roads where possible, especially in terminal and tunnel service. The general outline is somewhat different from former electric locomotives.

The conditions which this locomotive has to fulfil are as follows: "To make two regular trips of one hour each between the Grand Central Depot, New York City, and Croton with a total weight of 550 tons, a single

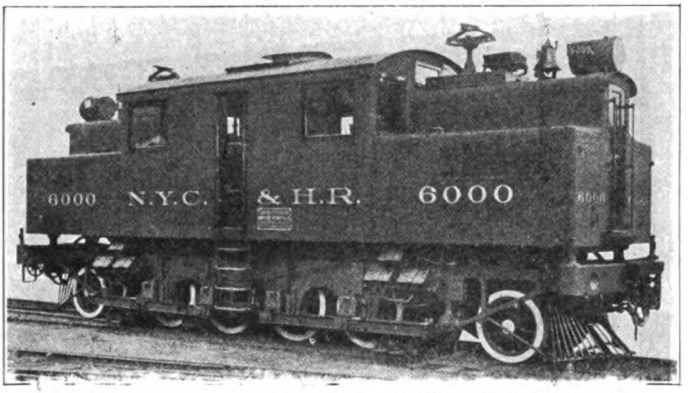

FIG. 423.—Direct-current Locomotive for New York Central R.R.

stop in each direction, distance 34 miles, and a lay-over not to exceed twenty minutes. In addition a similar schedule is to be maintained making more frequent stops. A further requirement is that with a total train weight of 435 tons the electric locomotive shall be able to run from the Grand Central Depot to Croton without a stop in 44 minutes, and, with an hour lay-over, be able to keep up the service constantly. This last schedule is equivalent to that of the Empire State Express (steam-locomotive).

Framing.

The main frame is of cast steel and forms not only the mechanical frame of the locomotive but also part

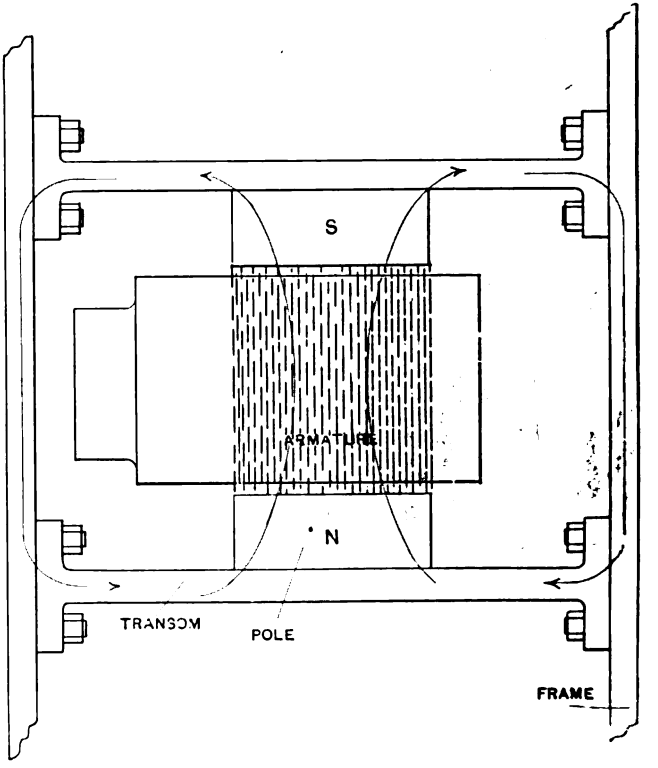

FIG. 424.—Cross-framing and Poles, showing Magnetic Path.

of the magnetic circuit of the motors (Fig. 424). The end frames carry the end pole-pieces, which are cast as a part of the frame. The pole-pieces between the motors are supported by heavy transoms bolted across

from the side frames. Proper distribution and division of weight of the locomotive have been accomplished by suspending the main frame and superstructure from a system of half-elliptic springs and equalized levers of forged steel, the whole being so arranged as to equalize the load and furnish three points of support. This construction, besides being strong and simple in design, greatly facilitates repairs and renewals, as an armature with its wheels can be removed by lowering the whole element without disturbing the fields and a new element substituted. This is a very important feature and will increase the earning capacity of the locomotive and decrease the length of time the locomotive will be in the shop for repairs, due to injured armature. All parts are readily accessible for inspection and cleaning. All the joints of the frame are machined and bolted together. The journal-boxes are held centrally in the jaws or sliding ways of the frame, which are machine-finished and designed with lateral motion enough to permit the locomotive to pass easily around a curve of 230 feet radius. Fig. 425 illustrates the construction of the magnetic framing, showing transoms, field poles, armatures, and magnetic circuit, and means for supporting the poles.

There are eight driving-wheels with a diameter of 44 inches; four leading wheels, two of each kind (pony wheels), 36½ inches diameter. These truck wheels carry part of the total weight and take one end of the equalizing-bar as in steam practice. The diameter of the driving-wheel axle is 8½ inches, with outside journal-bearings 14×7 inches diameter. Truck journal-bearings 12×6½ inches diameter. All the wheels are flanged. The

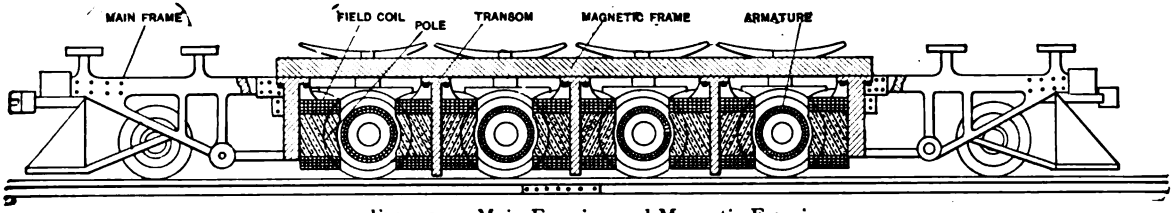

FIG. 425.—Main Framing and Magnetic Framing.

springs are carried on saddles placed on top of axle-boxes and span the frame. To the lower end of the journal-boxes is bolted the frame for carrying the collector-shoes, two on a side. At each end of the frame are the usual buffer-beam and automatic coupler and pilot This locomotive, being a double ender, does not require to be turned.

The superstructure consists of a central cab for the operator, containing the master controllers, engineer's valves, switches, and valves required to operate the sanding, whistling, and bell-ringing devices. There is a central corridor extending through the cab so as to permit access from the locomotive to the cars behind, and the contactors, rheostats, and reversers are arranged along the sides of these corridors in boxes of sheet steel which are sheathed with fire-proof material. All apparatus is furnished in duplicate and so arranged as to be operated from the operator's seat, while an unobstructed view is obtained from the windows. Air-gauges and meters are placed so as to be read by the operator from his position. The superstructure is built of sheet steel with angle-iron framing. The doors and windows are fireproof, a door at each end. On the top of the central corridor are placed the headlights (electric), one at each end, also bell, whistle, and current-collectors to be used when overhead work is used.

Motors. (Fig. 426).

There are four motors, one to each driving-axle. The armature is rigidily mounted on the axle. The armature disks or laminations are mounted on a quill which is then pressed on the axle. The winding is of the series-

drum-barrel type. The conductors are designed to avoid eddy currents and are soldered to the commutator segments. The commutator is supported on the quill. The commutator segments are of the best hard-drawn

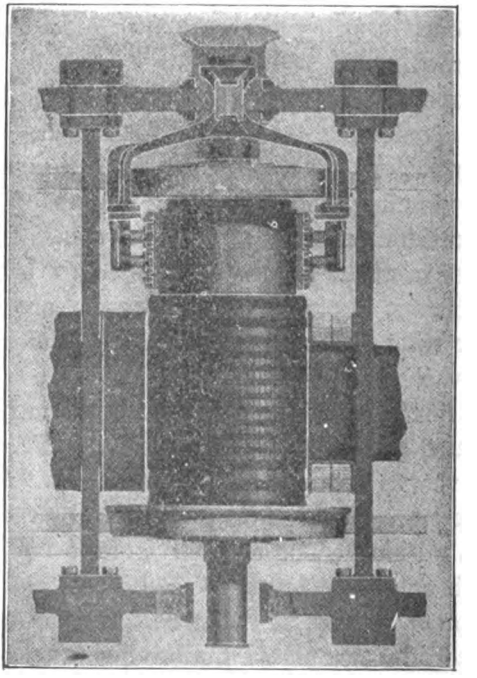

FIG. 426.—View showing Armature, Fields and Brushes.

copper, with the lugs cast to them, to which the leads are attached. The brush-holders are made of cast bronze and supported by the spring-saddle over the driving-box. Insulating material between the support and the brush-holder prevents short-circuit: it main-

tains the brush-holders in a fixed position relative to the commutator.

Field Poles.

The magnetic circuit on this locomotive is somewhat different from the usual construction. The frame forms part of the circuit. The armatures being in line, the end poles are cast with the end pieces of the frame. Between the motors the pole-pieces are supported by cross-pieces, or transoms, which are bolted to the side frames. The pole-pieces are placed back to back, as shown in Figs. 424 and 425. All joints are machined to a fit to insure low resistance to the magnetic lines of force. The pole faces next to the armature are all flat, which permits of a relatively large vertical movement up and down, as the poles are carried by the frame which rides up and down on the springs. In case a spring should break it will not interfere with the armature. This is a departure from former practice. The field coils are wound upon metal spools which are bolted upon the pole-pieces. The motors are bipolar. There are four gearless motors, using direct current at 625 volts. The rated capacity of these motors is 550 H. P. each, making the normal capacity of the locomotive 2200 with a maximum rating of 2800—about 50 per cent greater than that of the largest steam-locomotive built. The tractive effort on the motors at full load is 22,000 pounds. Total tractive effort at starting up, assuming 25 per cent tractive coefficient, 33,500 pounds.

Control System. (See *Controller*, Figs. 441 and 444.)

The control system is that of the Sprague General Electric Company, multiple-unit type, whereby several locomotives can be coupled together and operated from the one unit. The motor, reverser, contactors, and rheostats are all of the latest type. The master controller is fitted with a special operating lever about 24 inches long and capable of being moved through an angle of 75°. A current-limiting device is provided in the master controller. This system consists of two circuits in the locomotive, the control and the operating circuit. The control circuit is operated through the master controller and supplies the current to the solenoids operating the contactors. The control circuit is duplicate on each car, and is connected to the master controller and the control circuit at the connecting-board. The operating circuit is from the trolley through the reverser, rheostats, and motors, also contactors. The various combinations of current-flow through motors is governed by the master controller and contactors. Being in duplicate, current flowing in any control circuit on a car will flow into the same wire in the next car, operating the same combination of contactors, the motors on each car operating under the same condition from one master controller.

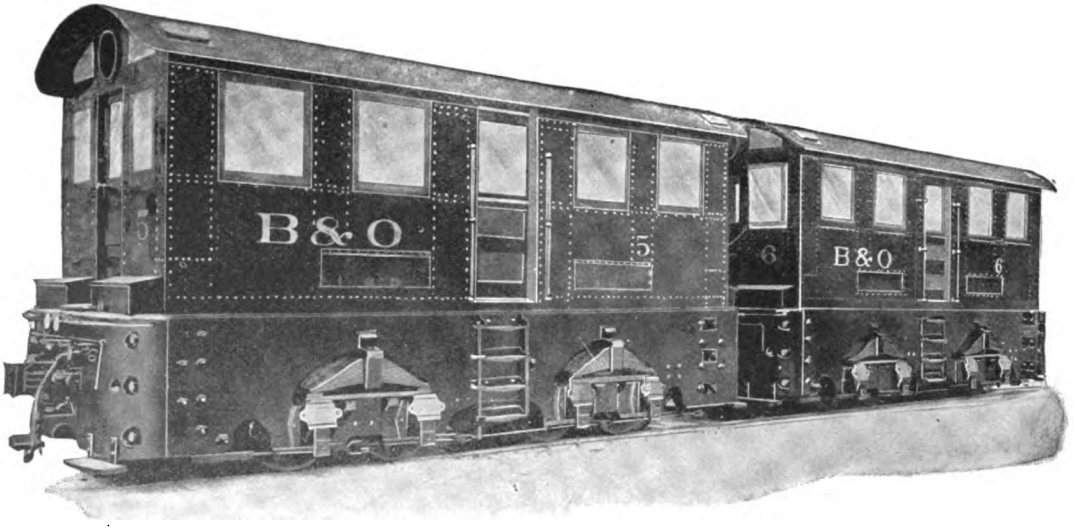

FIG. 427.—Complete 160-ton B. & O. Locomotive.

MODERN DIRECT-CURRENT ELECTRIC LOCOMOTIVES AS APPLIED TO STEAM RAILROADS.

Fig. 427 shows one of these locomotives. They are among the most powerful in the world and are in two units weighing 80 tons each. The cabs are of the box type, giving ample room for the accommodation of the Sprague General Electric Control system. Glass doors and windows furnish an unobstructed view of the surroundings in all directions. A large space under the cab floor permits the motors and gearing to be inspected readily. The main body of the truck frame consists of a rectangular framework of cast steel, made up of four strong and heavy pieces, two side frames and two end frames. The parts are machined at the ends and securely fitted and bolted together, thus forming a strong and rigid structure capable of withstanding severe shocks without injury. The end pieces form the buffer-beams, and to these is attached an improved draught-rigging which will withstand a drawbar pull of 100,000 pounds (Fig. 429). The draught-gear allows both longitudinal and lateral motion. The truck-frames are supported at four points on equalizers, each equalizer resting on a half-elliptic spring the ends of which rest on the journal-boxes. In construction the journal-boxes are similar to those used in standard railway practice, except that they are larger and stronger. The brasses can be easily removed without moving the axles or other parts of the truck.

Electrical Equipment.

The electrical equipment of each unit consists of four G. E. 65-B. one-turn railway motors of a rated capacity

of 200 horse-power, each giving a nominal rating of 1600 H. P. for the complete locomotive.

The control apparatus consists of master controller and engineer's valves in duplicate, the complete set being located in diagonally opposite corners of the cab, so that the engineer can stand in the front end of the locomotive

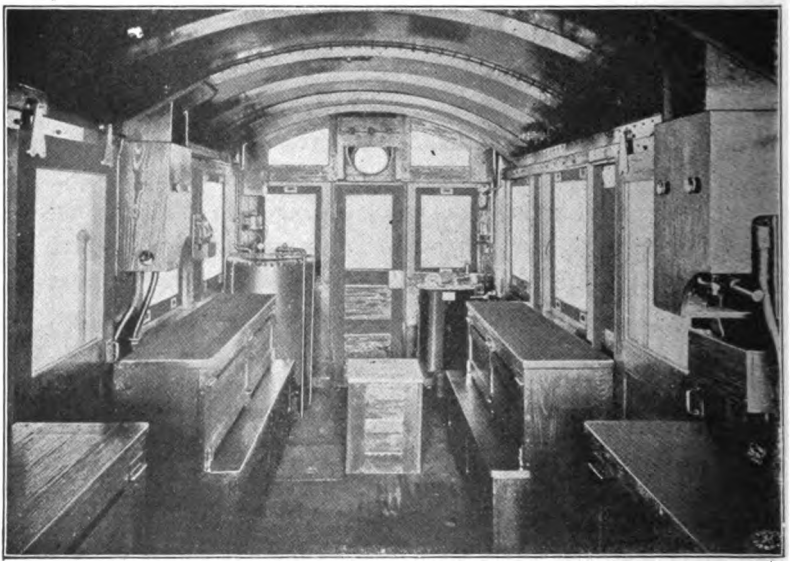

FIG. 428.—Interior View of Cab, B. & O. Locomotive.

when it is running in either direction (see Fig. 428). The locomotive also carries the customary whistle, bell, headlight, improved air-brakes, pneumatic sanding device, air-compressor, coupler, and drawbar.

In order to convey some idea of the relative size of these locomotives it may be noted that at the nominal rating of the motors each locomotive is capable of acceler-

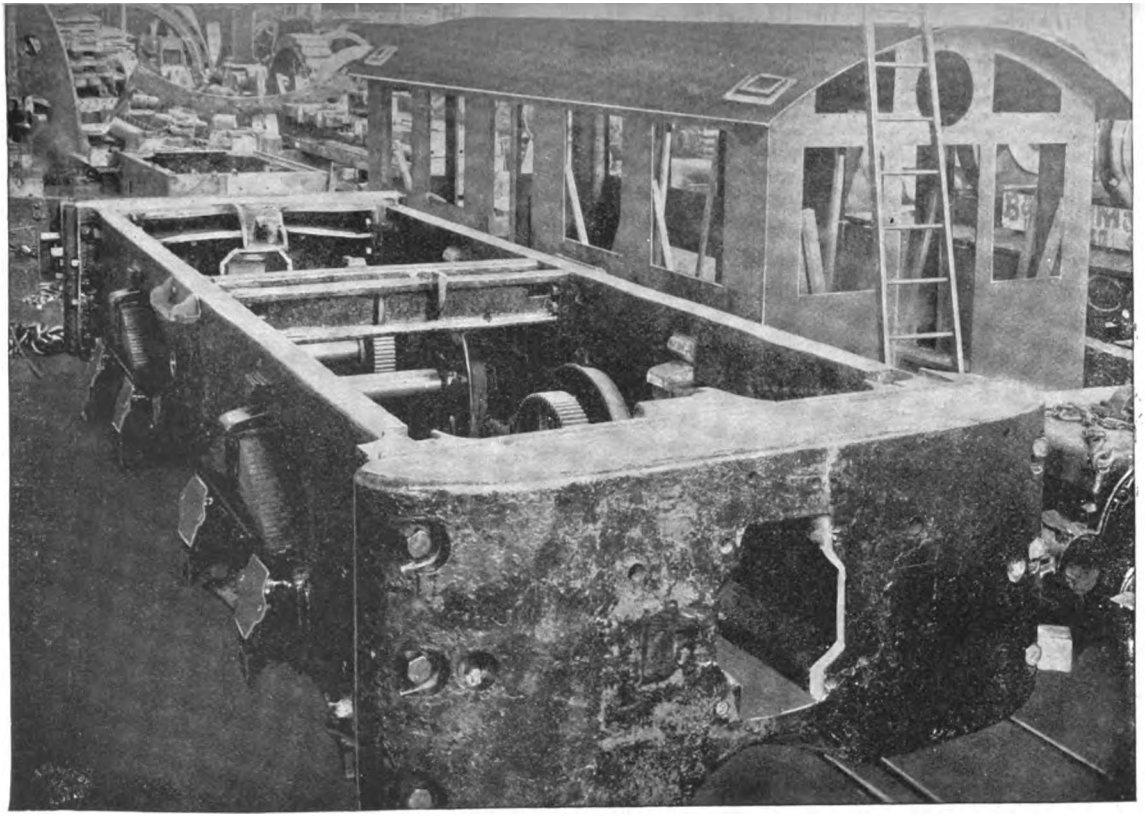

FIG. 429.—Frame and Cab of 160-ton B. & O. Locomotive.

ating on a level a train weighing 3000 tons with a current consumption of 2200 amperes, at a speed of 13 miles per hour. This current steadies down to 900 amperes. With the same current of 2200 amperes the locomotive will accelerate a 1400-ton train to a speed of 10 miles

FIG. 430.—Large Hoboken Locomotive.

per hour on a 10-foot grade, the current at this speed being 1600 amperes. The free running speed without load is 24 miles per hour.

General Dimensions.

Weight of locomotive.....160 tons--80 tons per unit
Number of units..... 2
Type of motor.....G. E.-65-B
H. P. rating of each motor.....200 H. P. at 625 volts
Gearing..... $8\frac{1}{19}$
Rigid frame.
Number motors..... 4 per unit—total 8

Number driving-wheels..... 8 per unit—total 16
Weight on driving-wheels per unit..... 80 tons
Total tractive effort, two units on motors. . 70,000 pounds
Total tractive effort at starting up, assuming
25 per cent tractive coefficient..... 80,000 pounds
Gauge..... 4 ft. 8½ in.
Diameter driving-wheels..... 42 in.
Length over all for one unit..... 29 ft. 7 in.
two units..... 58 ft. 7½ in.
Wheel-base of each unit..... 14 ft. 6¾ in.
Extreme width..... 9 ft. 5½ in. over cab-roof
10 ft. 7½ in. outside of 3d-rail shoe-supports
Height to top of cab..... 13 ft. 8 in.
to top of bell..... 14 ft. 9¼ in.
Motor-axle bearing..... 14 in. × 8 in. diameter
Journal-bearing..... 12 in. × 6 in. diameter

The two units are equipped with the Sprague General Electric multiple-unit control, which permits the two units to be coupled together and operated as one, the master controller on either unit operating the controlling apparatus on each unit. (See Fig. 441 for plan of control system.)

ELECTRIC LOCOMOTIVE OPERATING ON A THREE-WIRE SYSTEM.

The three-wire system is applicable to the operation of electric locomotives, where it can be operated at a high-voltage using direct current, thus requiring a minimum amount of copper in feeder and trolley. The principle is illustrated in Fig. 431, which is a diagram showing

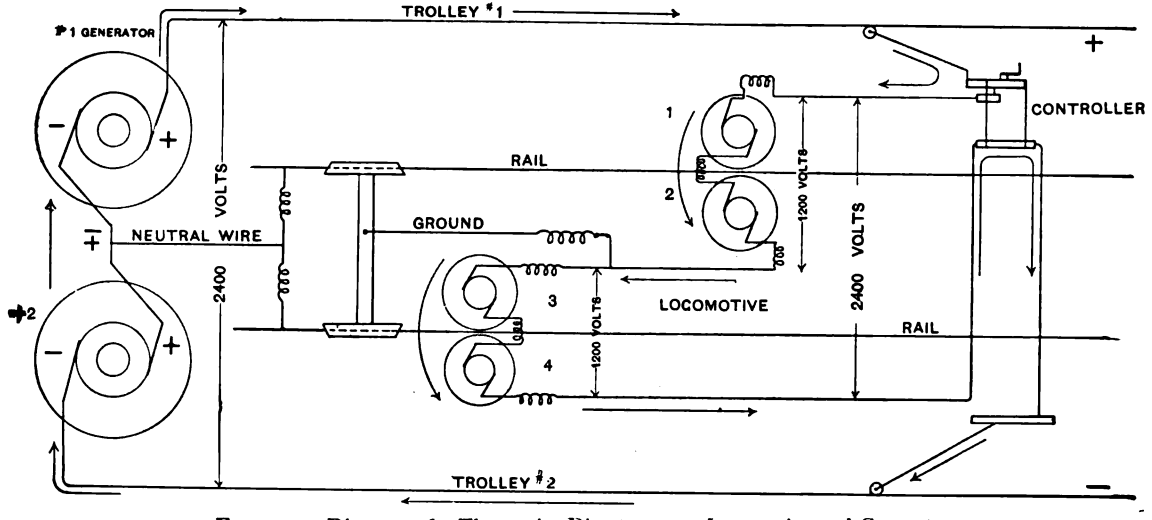

FIG. 431.—Diagram of a Three-wire Direct-current Locomotive and Generators.

generators, line, and motors used on a locomotive. As a rule two generators are used, operating in series; that is, the current generated in one is passed into the other and from there to the line, the voltage of the two generators

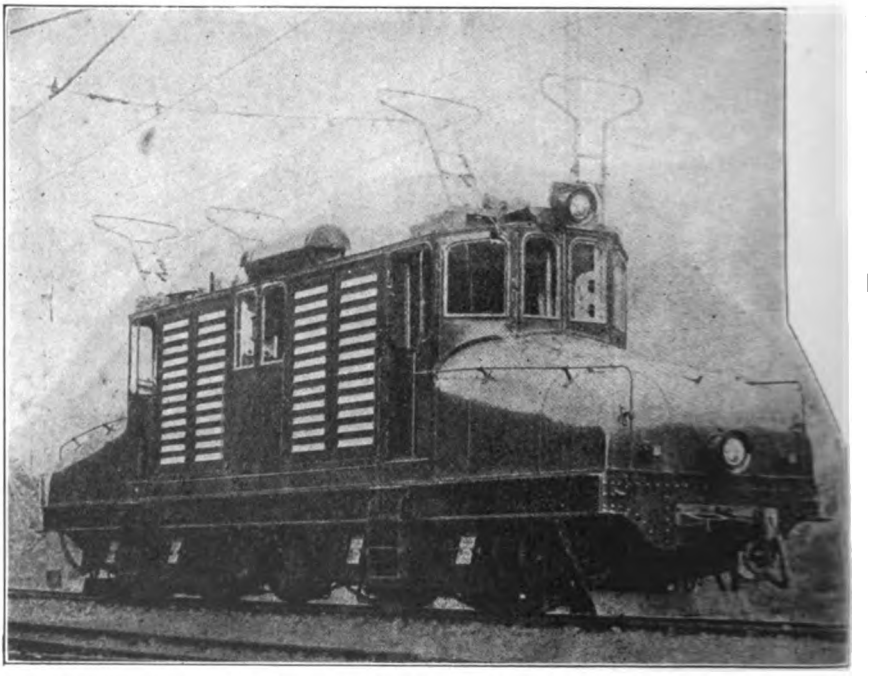

FIG. 432.—Locomotive Operating on the Three-wire System.

being added, the current being the output of one. In the example, each generator would generate current at 1200 volts, the two machines being connected in series by the neutral bus between the positive brush of one machine and the negative brush of the other. This neutral or third wire is connected to the rails and the

rails form the third wire for the system. The positive brush of the No. 1 generator is connected to one trolley line, while the negative brush of the No. 2 generator is connected to the other trolley. This system requires two trolley-wires. The diagram shows that 2400 volts potential exist between the two trolley-wires, or 1200 volts between each trolley wire and the rails, which are the third or neutral wire. The locomotive is shown with four D.C. motors mounted thereon and connected two in series permanently, or operating all four in series across the line from trolley to trolley. The motors are connected to the neutral wire at a point between the second and the third motor, each motor taking 600 volts.

Fig. 432 is a cut of a locomotive on a three-wire system built for the La Mure Railway by the Electrical and Mechanical Industrial Co. of Geneva, Switzerland. This railway operates between St. Georges de Commurs and La Mure, which at the time of the installation of the electric locomotive used steam-locomotives, and the electric locomotive was made necessary because of the numerous heavy grades and curves of short radius and the desire to meet the increased tonnage without change of road-bed. This electric locomotive is capable of drawing 120 tons, or 24 coal-cars, at a speed of 22 to 24 km. per hour, or about 14 miles. The locomotive is equipped with four 125-H. P. series direct-current motors connected in pairs and operated permanently in series under 600 volts pressure. These motors are connected to the neutral between the second and the third motor: this limits the pressure to 1200 volts between windings and frame, also pressure between either pair of motors. They are mounted on two trucks and

have a fixed bearing on the axle at one end, while the other end is attached by springs to the locomotive frame. The armature has a small pinion which meshes with the gear-wheel and the axle. This motor is very compact and narrow, due to small width of road. There

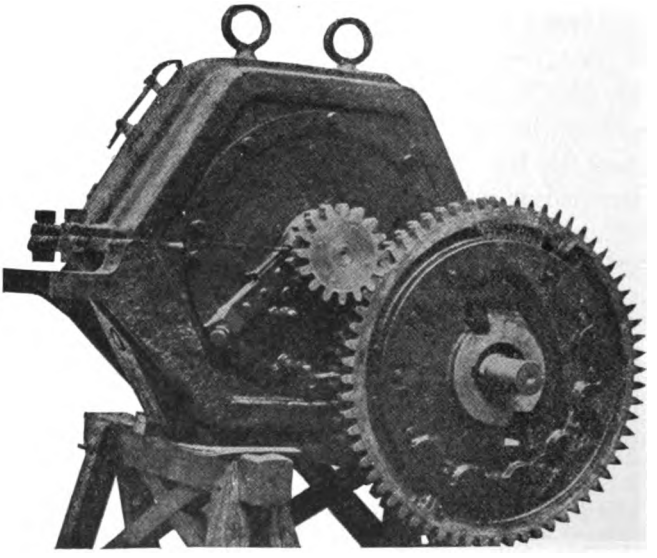

FIG. 433.—Motor and Gear-wheels.

are six poles. The frame is of steel, the poles being laminated and bolted to the frame. The bore of the fields is 30 inches, length of armature 9 inches. (Fig. 433.)

Controllers. (Fig. 434.)

Controllers are at each end of the cab, and they are mechanically connected and operated together for both

forward and backward direction. They contain a large number of running positions, which are obtained by the combinations of two handles, one principal handle and one multiplying handle, the latter interpolating. Each turns the series of resistances between two consecutive contact-points of the principal handle. In this

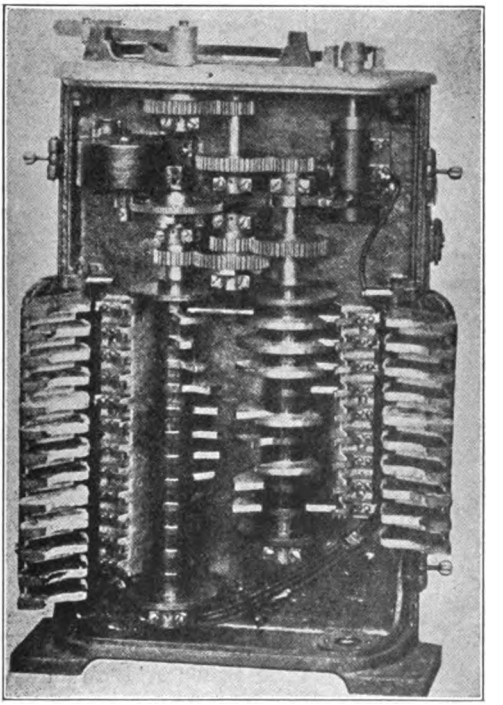

FIG. 434.—Controllers for Locomotive on the Three-wire System.

way there are obtained by means of the two handles, one of twelve and the other of eight contacts, ninety-six variations in speed. Means for opening the circuit are

placed outside of the controller, and are so constructed as to break the current at several points instead of in oil. The current can be cut off at any position of the controller, but cannot be put in again until the controller is to full off position. This holds good for all grades of speed. This controller can be arranged for various combinations of motor operations. The diagram shows only a simple series operation of all four motors, or two motors between neutral and either trolley.

Operation as Shown by Diagram 431.

When the controller is turned to operate all four motors in series, the current flows from the positive brush of the generator No. 1 into the trolley at a pressure of 2400 volts, passes into the locomotive controller, thence to motor No. 1, to motor No. 2, to motor No. 3, to motor No. 4, and trolley to the negative brush of generator No. 2.* The arrows show the course of the current. The fact that the neutral or third wire is connected between motors Nos. 2 and 3 makes it possible to operate either pair of motors without using the other pair. Motors Nos. 1 and 2 can be operated by opening connections between motors Nos. 2 and 3 and the neutral wire or rail. In this case current will pass through motors Nos. 1 and 2 and into the neutral as a return. The pressure will be only 1200 volts, or the voltage of one generator. To operate motors Nos. 3 and 4 alone the circuit will be opened between motors Nos. 1 and 2 and the neutral or positive trolley. Then current to motors Nos. 3 and 4 will flow out from the neutral bus into

* All in series.

motors Nos. 3 and 4 to the negative trolley. These combinations are made in the controller also.* This shows that when one pair of motors becomes disabled the other pair can be operated when motors are working under normal condition. Current is flowing in the neutral or third wire only when an unbalanced condition exists. The pressure between each motor is 600 volts.

Braking.

There are electric and air brakes, also hand-brakes. The electric motors are used as generators in running free on grade, and supply current to electric brakes whose resistances are controlled by the controllers. The resistances are calculated large enough to allow a continuous braking with a weight of 150 tons or when all the traction weight of the locomotive is utilized. For the air-brakes a small 1200-volt motor operates the air-compressor and is of 4-H.P. capacity. The compressor is of the rotary pattern. A special device is used to stop and start the pump and regulate the air-pressure. The hand-brake has 16 brake-shoes bearing against the wheels.

The superstructure follows closely the outline of American-built locomotives. The central cab is 26 feet long, 13 feet 4 inches wide, and 12 feet 6 inches high. The ends slope down towards each end. The framing is formed of channel-iron. Riveted doors are provided, two on a side. Lookout windows are at each end of

* By controller combinations either pair of motors can be operated from either side of the circuit.

the cab. Suitable hand-railings and steps are attached. The air-cylinders are carried upon the roof of the cab. The trolleys, four in number, are of the bow pattern. The resistances are carried in the sloped positions of the body. The electric-motor armatures revolve at a speed of 400 revolutions per minute, taking a current of 185 amperes at 600 volts. There are the necessary instruments in the cab, as voltmeter, ammeter, fuses, and cut-outs.

CHAPTER XXVI.

ELECTRIC CONTROL SYSTEMS OF LOCOMOTIVES.

ELECTRIC locomotives or trains composed of one or more locomotives or cars employ means to operate the electric motors on each unit from one end of the train by one person handling the controller; also when operating as single units they still have their individual control system. The following is a description of the various systems in practice on locomotives and motor-cars:

Fig. 435 is a simple diagram showing the principle of the multiple control, and is the basis upon which control systems are constructed. Two locomotives are represented, as 1 and 2, one motor on each locomotive. The multiple-control system is made up of two systems or circuits, the control circuit and the operating circuit. The control and the operating circuit are identical in each locomotive. The heavy lines indicate the operating circuit, and the fine line (*A*–*B*) the control circuit. It will be seen that only the control circuit is carried through to the second locomotive. In this particular case only two control circuits are shown, it being all that is necessary for the illustration; but in actual practice there are three or more. Each locomotive has one or more master controllers. These master controllers receive current from the trolley and supply current to the control circuit only. In the control circuit are provided magnets or solenoids (1–2–3–4) which operate contactors or switches in the operating circuit (as 5–6 in Fig. 435). The operating circuit receives current directly from the trolley

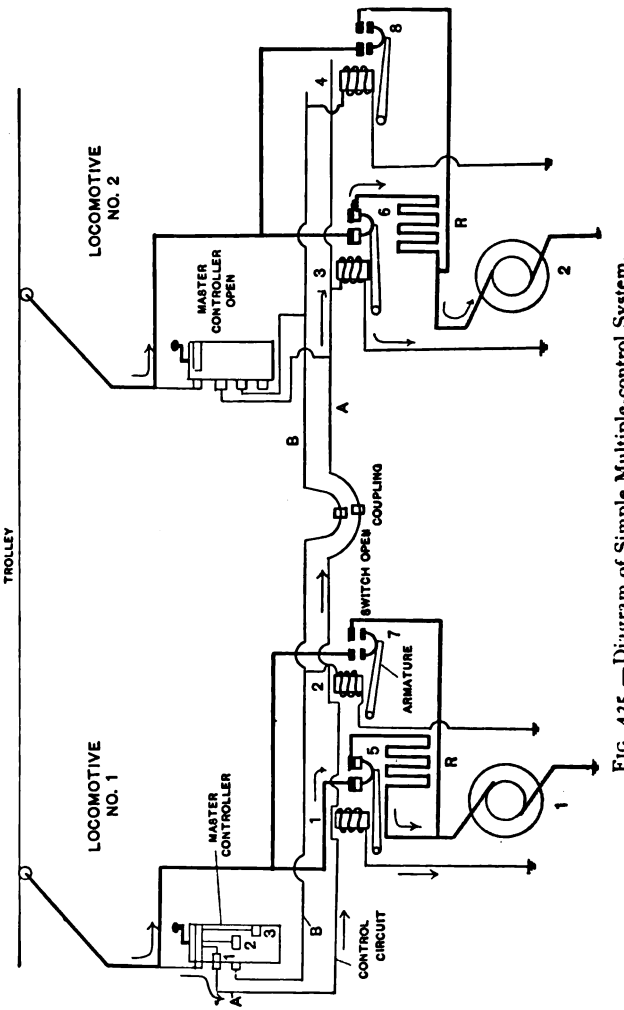

FIG. 435.—Diagram of Simple Multiple-control System.

through the contactor-switches. These contactor-switches are operated by the control circuit and solenoids for various combinations of motor operation or combination, the same as with the direct series parallel controllers. In Fig. 435 the operation is as follows: The master controller in locomotive 1 is in the position where current from the trolley is flowing into control circuit *A*, from there into solenoid 1, thence to ground; also through circuit *A*, to locomotive 2, through solenoid 3, to ground. The effect is to attract the armature in switches 5 and 6, closing those switches, allowing current from operating circuit to flow through the resistance and into motors 1 and 2. The master controller in locomotive 2 is open, the master controller on 1 is operating both locomotives. It will be seen that switches 7 and 8 are open when the master controller is operated so as to bring circuit *B* in contact with segment current, which will flow through *B* into solenoids 2 and 4, closing switches 7 and 8, allowing current to flow into motors 1 and 2 with resistance cut out, switches 5 and 6 being opened. This shows but two steps in the combination, but it is the principle upon which all other combinations are made. The control circuit may be purely pneumatic in some systems.

WESTINGHOUSE MULTIPLE TRAIN-CONTROL SYSTEM. *

The increasing use on electric-railway lines, especially on elevated systems, of trains made up of two or more cars each, has been a strong incentive for the development and perfection of multiple train-control systems by which a train may be controlled from a single point. In

* One of several types made by that company. They also make the unit-switch type. See New York and New Haven Electric Locomotive.

an ideal system of train operation the weight of the train and the capacity of the motors would increase or decrease in direct proportion to the paying load. The Westinghouse system involves the use of compressed air for moving the current-controlling apparatus, electromagnetic valves governing the admission of air to the controlling cylinders and low-voltage electric circuits running from car to car for controlling the action of the magnet valves. The connections for the low-voltage circuits are the only ones which have to be established between the cars of the train, no air connections being required outside of the ordinary brake hose. A complete equipment for each motor-car consists of one controller with operating head, two or four electric motors, two motormen's mutliple-controlling switches, one railway-type circuit-breaker, one set of seven-point connectors, and one cell of storage-battery. The car-controller is similar in design to the ordinary form of hand-controller which has been successfully used on electric street-cars for many years. It consists essentially of two drums which revolve in bearings, and stationary-contact fingers, which make contact with points upon the revolving drums. The large or main drum opens the main circuit and makes the motor and resistance combinations; the small drum reverses the motors.

The operating head, shown in Fig. 436, consists essentially of an operating cylinder *a*, a release cylinder *b*, two reverse-cylinders *EE*, a repeating switch *d*, a limit switch *e*, four magnetic valves f^1, f^2, f^3, f^5, and two safety-switches *g*, *h*.

The circuit-breaker is provided with a special front, upon which are mounted the pneumatic operating devices.

These pneumatic devices provide a means by which the motorman may open or close the circuit-breaker, but at the same time they do not interfere with its automatic action.

The two multiple-control switches are placed one at each end of the car, and by means of the one on the front of the leading car the motorman directs the action

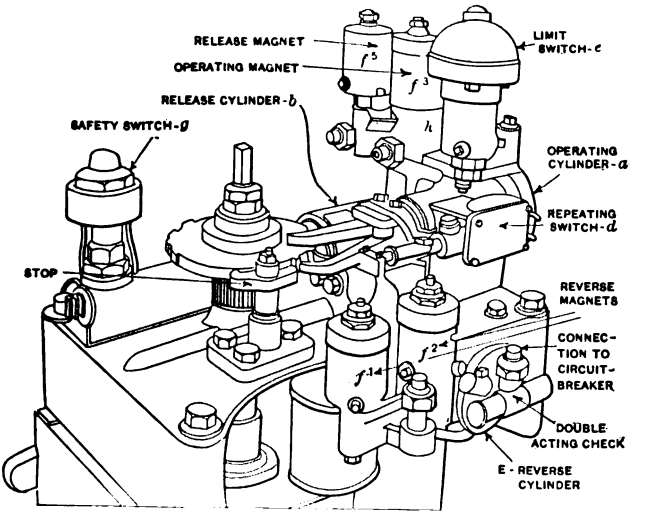

FIG. 436.—Operating Head, Pneumatic Control.

of the controllers on all of the motor-cars in the train. The switch consists essentially of a skeleton brass drum mounted upon a shaft and insulated therefrom, and stationary contact fingers making contact with points upon the drum. The switch controls only the low-voltage battery circuits which operate the magnet valves.

Fig. 437 shows diagrammatically the operating head, circuit-breaker, multiple-control switches, batteries, and

complete wiring connections for one car as generally installed. In following out this diagram of the various cycles of operation it will be found a great help to remember

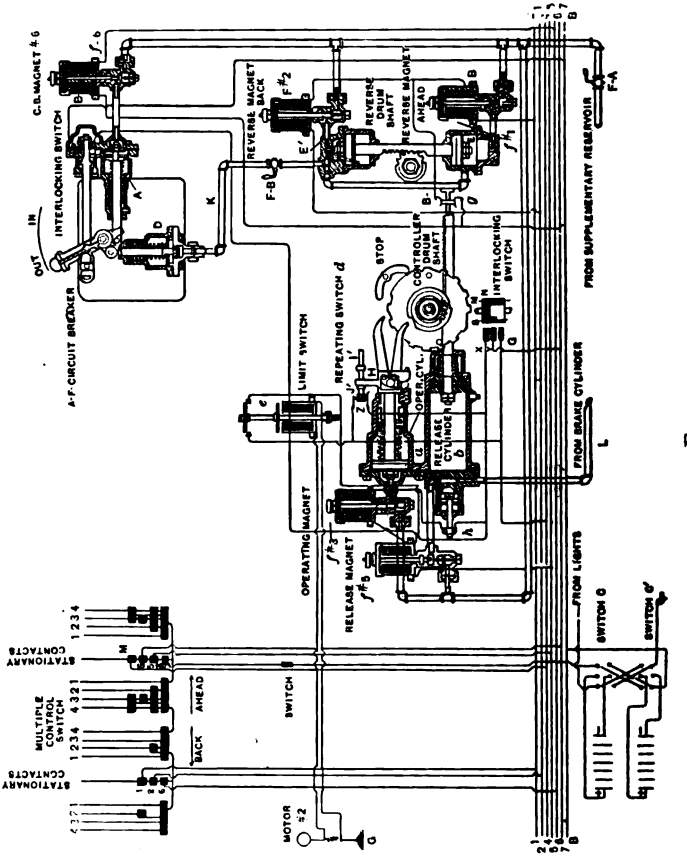

FIG. 437.

that all of the contacts on the drum of the multiple-control switch, the development of which is shown, are electrically one, and that the function of this switch is

merely to connect the low-voltage magnet circuits to the positive of the battery. All of the magnets, with the exception of the limit-switch magnet, have one terminal connected to the common return B', which is in turn connected to the negative terminal of the battery.

When the multiple-control switch is moved to the right so that the point marked 1 on the drum development corresponds with the stationary contacts, 6 is connected to $B+$; this completes the battery circuit through the circuit-breaker magnet f^6, which immediately opens the air-valve, admitting air to the cylinder A. The air, acting upon a piston in this cylinder, compresses a spring, the function of which is to open the circuit-breaker.

When the multiple-control switch-drum is moved to position 2, 6, 1, and 5 are connected to $B+$, thus completing the battery circuit through magnets f^6, f^1, and f^5.

Magnet f^1 opens the valve admitting air to one of the reverse-cylinders, turning the reverse-drum to the "ahead" position; air then passes from the reverse-cylinder through the pipe connection K to the cylinder D, where, acting upon a piston, it throws in the circuit-breaker. Air is prevented from passing from one reverse-cylinder to the other by means of a double-acting check located at the end E'. Magnet f^5 closes the air-supply to the release cylinder and opens an exhaust passage from the same to the atmosphere.

Upon moving the switch-drum to position 3 the battery circuit through magnet f^3 is completed through the repeating switch d and the safety switch h; S and M are connected together and to the battery cir-

cuit, and at the same time the circuits through magnets f^5 and f^6 are kept closed, but the one through f^1 is opened. The completing of the circuit through magnet f^3 opens the air-valve, admitting air to the operating cylinder *a*. The operating piston immediately moves forward, throwing the controller on one notch.

As soon as the operating piston reaches the end of its stroke the arm H strikes the shoulder I' and opens the repeating switch, which breaks the battery circuit through the operating magnet f^3, cutting off the air from the operating cylinder and opening the air exhaust from the same to the atmosphere.

The operating piston is now returned to its original position by means of a spiral spring located in the front end of the cylinder. As the piston reaches the end of the return stroke the arm H strikes the shoulder J', closing the repeating switch, completing the battery circuit again through magnet f^3, and admitting air once more to the operating cylinder, which now advances the controller to the second notch.

This cycle is automatically repeated until the controller reaches full series; at this point the fingers X and Y, which are connected to the terminals of the repeating switch, are short-circuited by the contact piece N', stopping further automatic action.

Upon moving the multiple-control switch-handle to position f^4, the connection between the wire S and M is broken, which opens the circuit between the finger Y and the repeating-switch terminal Z, allowing the automatic notching of the controller to proceed. When full multiple is reached the fingers X and G are short-circuited, which again stops the automatic action.

To throw off the controller the multiple-control switch-handle is brought to position 1. This opens the circuit through magnets f^5 and f^3, thus shutting off the air from the operating cylinder and allowing air to pass into the release cylinder, which, acting through the rack and pinions, throws off the controller.

Two sets of batteries are used, so that one set may be charged while the other is discharging. The batteries are charged by throwing one set at a time in series with the light circuit.

By the use of this system it is possible to operate cars individually as on ordinary trolley roads, or to make them up into trains of any length. Also, any proportion of motor-cars may be used, making it possible to obtain any desired amount of power for starting the trains quickly, which is necessary in any service involving many stops.

THE GENERAL ELECTRIC TYPE M CONTROL SYSTEM.

The General Electric Type M Control is especially adapted for use on motor-cars in a service which requires either that the cars be operated alone, or that two or more be coupled together as a train and operated simultaneously. When several cars are coupled as a train, the circuit connections are so arranged that the motors on all of the motor-cars may be controlled from either end of any motor-car. The cars may be coupled into a train without reference to their relative positions, and either end of any car may be coupled to any other car on the train.

The Type M system of control consists in general of

two parts: First, a series-parallel motor-controller, composed of a number of electrically operated switches called "contactors," and a separate electrically operated reverse switch called the "reverser"; the contactors make the different combinations of the motors and vary the starting resistance in the circuit with them. Second, two master-controllers, one located at each end of each motor-car, which operate the motor-controlling contactors and reversers. A cable which connects each master-controller with the motor-controllers runs the entire length of the train, connecting the control circuits of the several motor-cars together by means of suitable couplers between the cars. It is therefore necessary to continue this control-circuit cable through any trail-cars which may intervene.

The synchronous action of the motor-controllers on all the cars, simultaneously with the movement of the master-controller handle, insures similar resistance connections and motor combinations on all the cars at all times. The position of the master-controller handle indicates to the operator the exact position of the motor-controllers on all of the cars. The rate of movement of the motor-controllers, and consequently the amount of current taken by all of the motors, is therefore under his immediate control, and the motorman may instantly utilize the full power of the motors in either direction in an emergency.

In case the power circuit is momentarily interrupted for any reason, the system of control provides for the immediate restoration of the motor- and resistance-connections which were in effect immediately preceding such interruption. In this respect it is equivalent to

the ordinary hand-controller. All current for the operation of the motor-controllers on each of the different cars passes through the single master-controller under the immediate control of the motorman. If desired, the master-controller can be so arranged that, in case the motorman removes his hand from the operating-handle, the control circuit will be interrupted and the motor-controllers opened, thus shutting off the power from all the motors. The master-controller supply circuit is protected by a fuse.

The interruption of current to the motors in the off position of the motor-controller is insured by providing three separate contactors connected in series, any one of which has sufficient capacity to open the circuit. If the train should break in two, the current would automatically and instantly be cut off from the motors on that part of the train not under the control of the motorman, while his ability to control the front part of the train would not be affected.

When the master-controller is thrown off, both "line" and "ground" connections are cut off from the operating coils of important contactors, and none of the wires in the train cable are "alive."

For reversing the motors the master-controller is provided with a separate reversing-handle, and a mechanical interlocking device prevents this reversing-handle from being thrown, unless the main handle is in the off position. Moving this reverse-handle either forward or backward makes connections for throwing the reverser to either "forward" or "reverse" position. The reverser is electrically interlocked, so that it cannot be thrown when the motors are taking current.

The operating circuit is so arranged that, unless the reverser is thrown for the direction of car movement indicated by the master-controller reverse-handle, it will be impossible to operate the contactors and get current through the motors on that particular car.

A cut-out switch for the control is provided on each car, so that in an emergency all of the contactors and the reverser on that car may be disconnected from the control circuit.

The control operating current per car at 550 volts line potential is about 2.5 amp. for an equipment for two 160-H.P., or four 80-H.P. motors.

The operating coils in the controlling apparatus, unless otherwise specified, are wound for working at a maximum potential of 600 volts without undue heating, and will successfully operate on a minimum of 300 volts.

The total weight of control apparatus for this equipment is approximately 2200 lbs.

The following is a brief description of the various parts which make up a control equipment:

Master-controller (Fig. 438).

The master-controller, although considerably smaller than the ordinary street-car controller, is similar in method of operation and appearance. Separate power- and reverse-handles are provided, as experience has led to the general use of this arrangement in preference to the movement of a single handle in opposite directions.

All current for the operation of the contactors is taken directly from the line, and passes through the single master-controller in use. A magnetic blow-out is provided, similar to that used on standard street-car controllers.

An automatic safety open-circuiting device will generally be provided in the master-controllers, whereby, in case the motorman releases the master-controller handle,

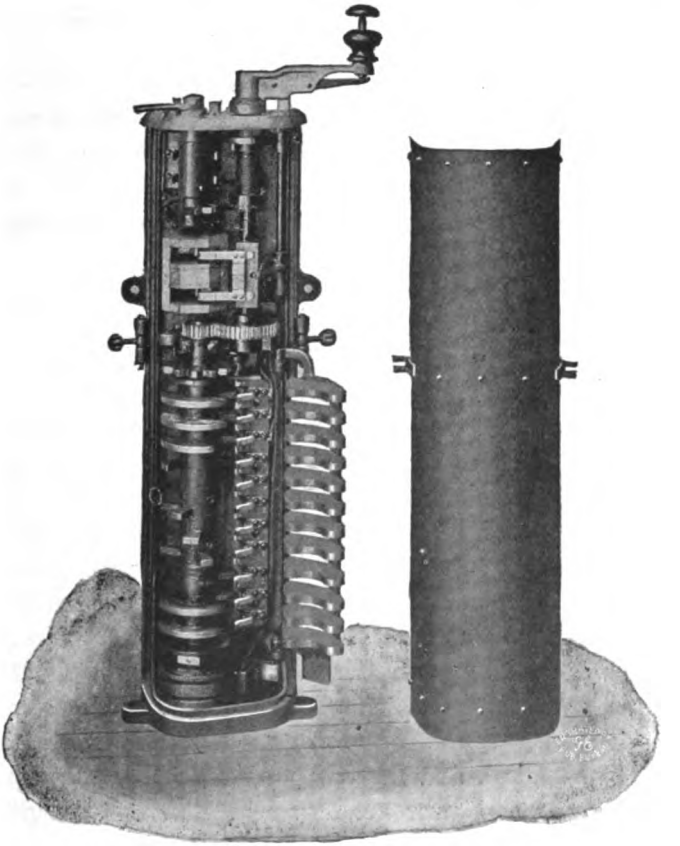

FIG. 438.—C-6 Master-controller—Open.

the control circuit for the motor-controllers will be opened on auxiliary contacts. This result is obtained by mounting the operating mechanism for the auxiliary safety

device loosely on the main shaft, and returning it to the "off" position by a spring when released, without necessitating the movement of the entire cylinder or handle; thus the device is entirely separate and distinct in its action from the main cylinder.

The handle for operating the reverser can be removed only in the intermediate or off position. As the power-handle is mechanically locked against movement when the reverse-handle is removed, it is only necessary for the motorman to carry the reversing-handle when leaving the car.

Contactors.

Each contactor consists of a movable arm carrying a removable copper tip which makes contact with a similar fixed tip, and a coil for actuating the arm when supplied with current from the master-controller. The contactor is so designed that the motor-circuit is closed only when current is flowing through the coil; and gravity, combined with the spring-action of the finger, causes the arm to drop and open immediately when the master-controller circuit is interrupted. The contactor has an efficient and powerful magnetic blow-out, which will effectually disrupt the power-circuit under conditions far exceeding normal operation. The different contactors are practically identical, and the few parts which are subjected to burning and wear are so constructed as to readily be replaceable. They should preferably be located under the car floor at one side, and are so designed as to be readily inspected.

Reverser.

The general design of the reverser is somewhat similar to the ordinary cylindrical motor-reversing switch, with the addition of the electro-magnets for turning it to either

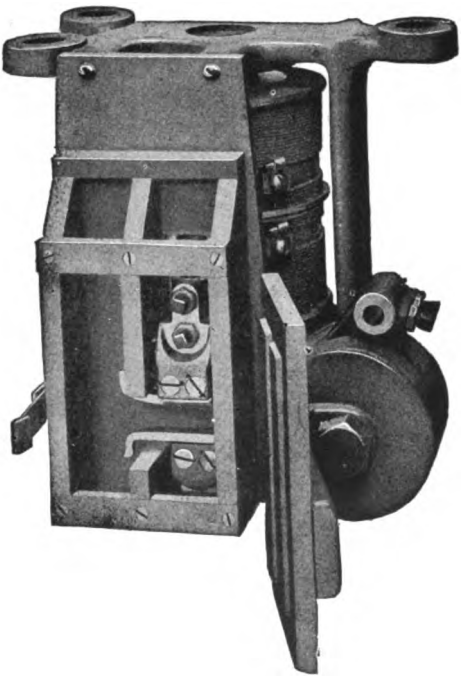

FIG. 439.—DB-15 Contactor.

the forward or reverse position. The operating coils are similar to the ones used on the contactors. The reverser should preferably be placed under the car floor, and may be inspected in the same way as the contactors.

Control Cut-out Switch (see Fig. 441).

This switch is provided so that it may be possible to cut out, on any car, all of the control-operating coils,

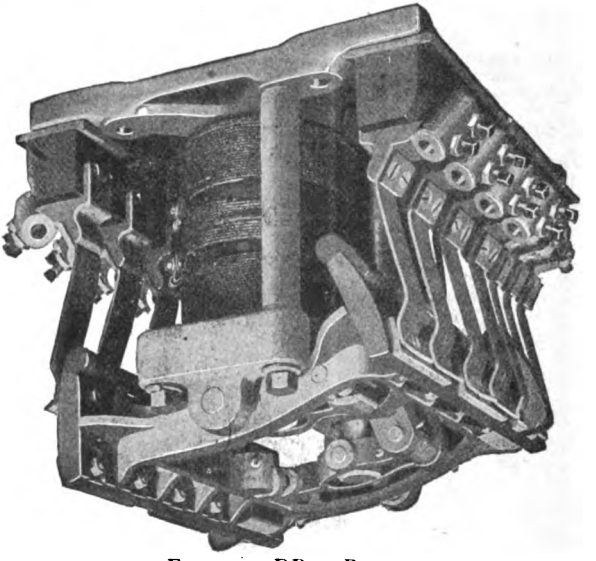

FIG. 440.—DB-20 Reverser

and it should be located in a convenient position on the car.

A number of small enclosed fuses are placed in the control-circuit at such points as to efficiently protect the control apparatus.

Switch for Master-controller (see Fig. 441).

A small, quick-break single-pole switch and separate fuse are provided in the supply circuit for the protection of each master-controller. When this switch is open,

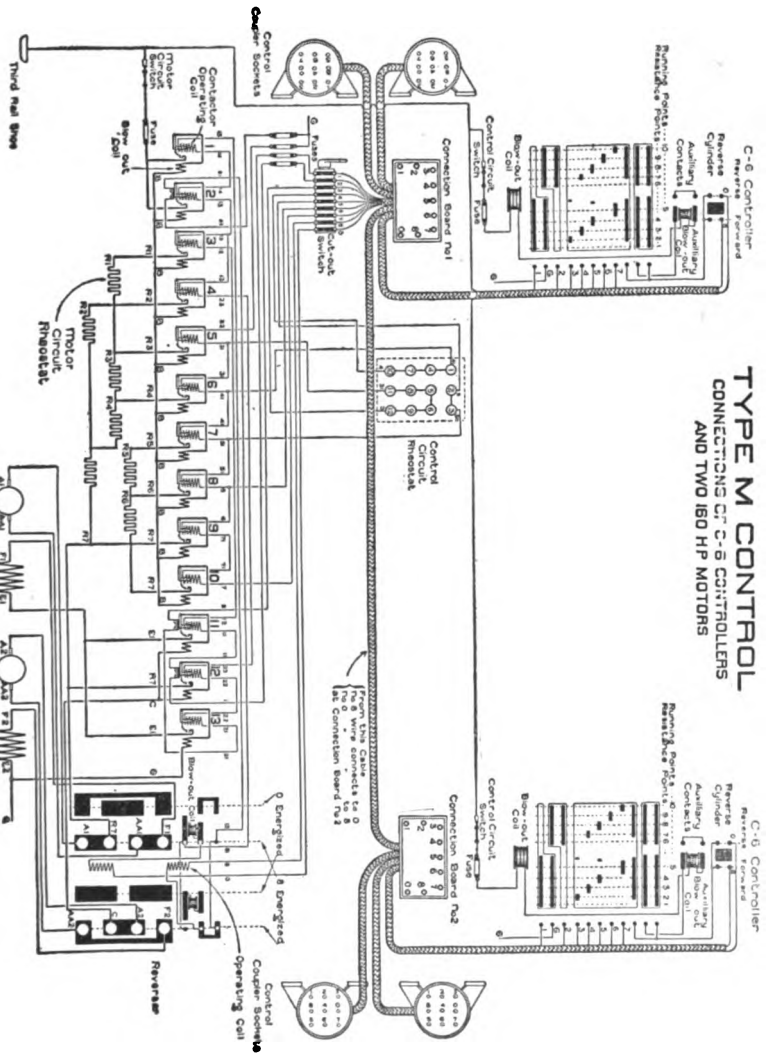
TYPE M CONTROL
CONNECTIONS OF C-6 CONTROLLERS
AND TWO 160 H.P. MOTORS
C-6 Controller
Reverse Forward
Reverse Cylinder
Auxiliary Contacts
Auxiliary Blow-out Coil
Running Points
Resistance Points
Blow-out Coil
Control Circuit Switch
Fuse
Connection Board No 1
Connection Board No 2
Control Circuit Rheostat
Control Coupler Sockets
Contactor Operating Coil
Motor Circuit Switch
Blow out Coil
Third Rail Shoe
Motor Circuit Rheostat
Cut-out Switch
Energized
Reverser
Control Coupler Sockets Operating Coil

FIG. 441.

all current is cut off from the entire control system through the particular master-controller.

Control-cable Couplers.

The coupler, connecting between the control-cables on adjacent motor-cars, or motor-car and trailer, consists of a socket, attached to the car, containing a number of insulated metallic contacts connected to the train-wires, and of removable plugs containing corresponding

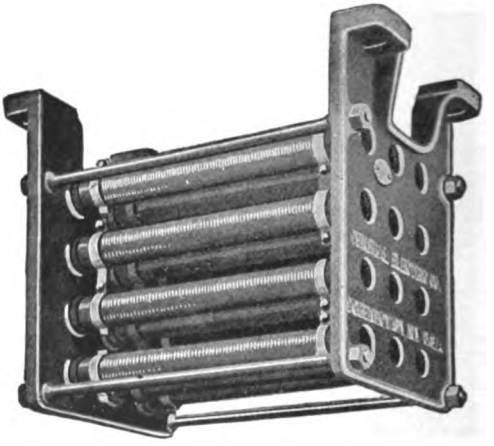

FIG. 442.—T-101 Control-circuit Rheostat.

insulated contacts. The two plugs, joined by a flexible cable (the whole being called a "jumper"), connect corresponding terminals in the sockets on adjacent cars. The parts subject to wear are readily replaceable.

The coupler-sockets are provided with spring-catches which hold the plugs in contact under normal conditions, but permit them to automatically release in case the train breaks.

Control-cable.

A special flexible cable, made up of different-colored individually insulated conductors, is used, whenever possible, to make control-circuit connections between the various pieces of apparatus, a similar cable, having an outside rubber covering, being used for the "jumper" connection between the coupler-plugs.

Control-circuit Rheostat.

A special high-resistance rheostat is required for introducing consecutively the various operating coils of the contactors producing the motor rheostatic steps.

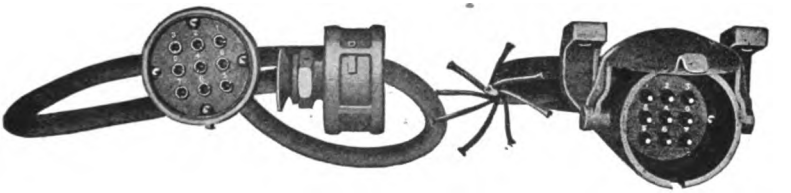

FIG. 443.—DA-24 Coupler-socket and DC-22 Coupler-plugs.

Control-circuit Connection-board (see Fig. 444).

Connection-boards are provided for connecting the control-cables at junction points without splicing, and small copper terminals are provided for attaching to the ends of the wires. The connection-board should be located preferably above the floor of the car.

Motor-circuit Switch and Fuse (see Fig. 444).

For the purpose of disconnecting the motors on any particular car, a switch is provided for opening the main circuit between the third-rail shoes or trolley and the

motor-controller. Between this switch and the motor-controller there is also provided, for the protection of the apparatus, either an automatic circuit-breaker or an enclosed fuse, depending upon the character of the service.

WESTINGHOUSE HAND-CONTROL FOR SINGLE-PHASE ALTERNATING-CURRENT LOCOMOTIVES OR CARS.

Alternating current makes possible by far the most effective and efficient system of speed regulation ever provided for traction-service. The speed of the series alternating-current motor is varied by any means which changes the impressed E.M.F.; therefore, with a static transformer of the single-winding or auto-transformer type with a number of taps, the potentials suitable for the motor-windings may be obtained, and the wasteful losses in resistance found in direct-current control are avoided. Since varying the voltage varies the speed of the motor, it is only necessary to connect the motor to the proper lead to obtain the desired speed. Such a change in connections is effected either by a hand-controller of the drum type or by means of the unit-switch system of control.

With such a controller, any difficulty is in plain sight, and may be readily remedied with the simplest tools and repair parts. Equipments up to four 75-H.P. motors in capacity may be furnished with hand-controllers of a size somewhat less than those necessary for direct-current motors of the same capacity. These controllers are of great reliability in operation, and it has been found in practice that five points on alternating-current controllers give a more uniform acceleration than nine

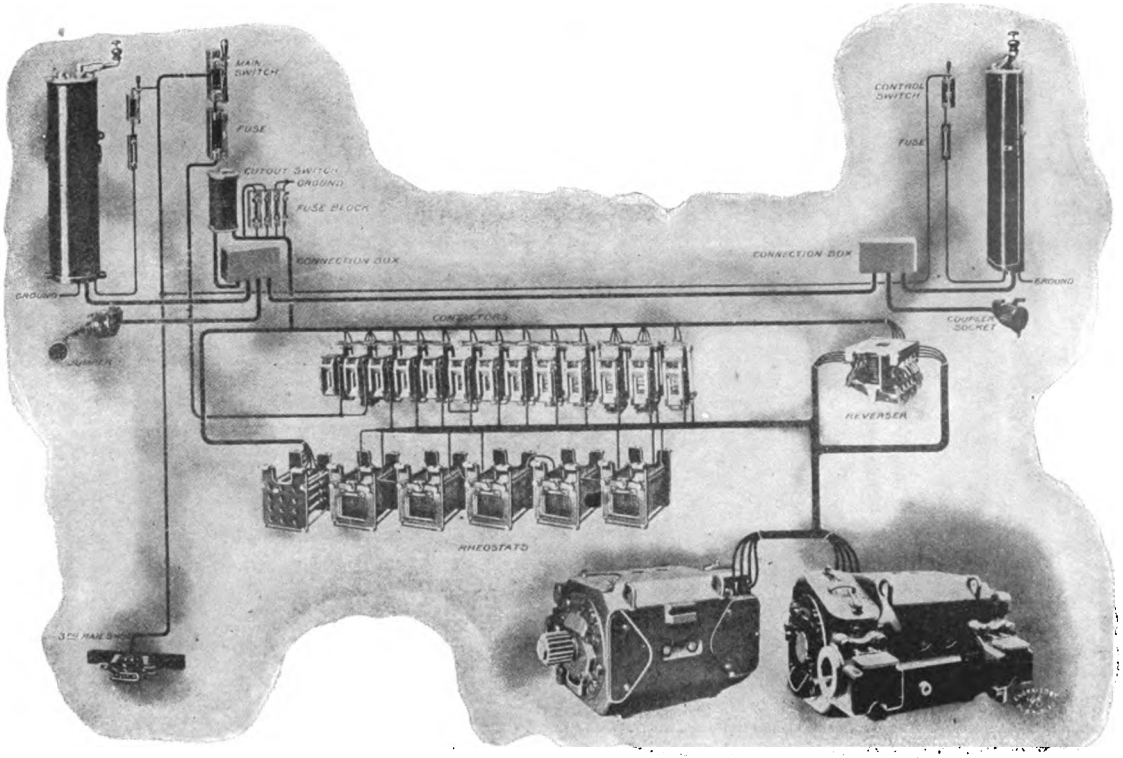
MAIN SWITCH
FUSE
CUTOUT SWITCH
GROUND
FUSE BLOCK
CONNECTION BOX
GROUND
CONTACTORS
JUMPER
3RD RAIL SHOE
CONTROL SWITCH
FUSE
CONNECTION BOX
GROUND
COUPLER SOCKET
REVERSER
RHEOSTATS

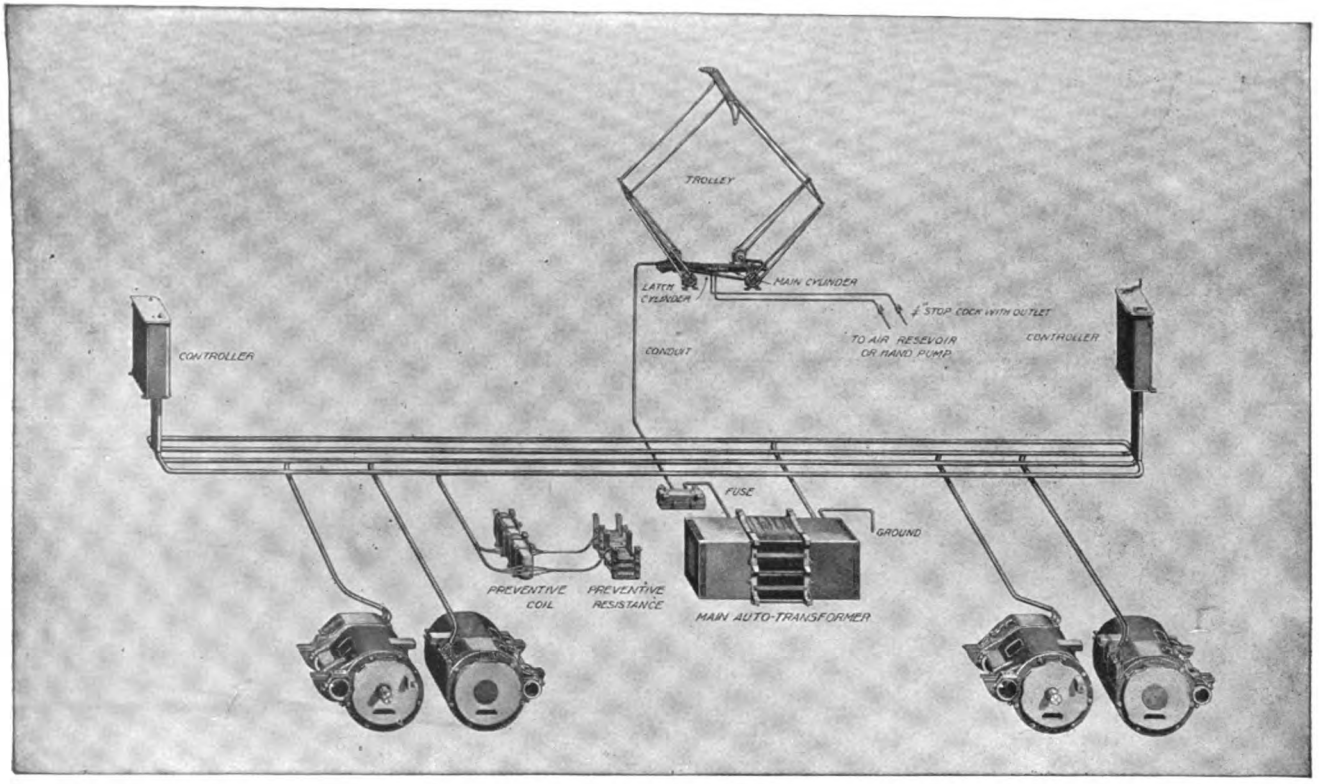

FIG. 445.—Diagram of Apparatus for Hand-control A.C. Equipment. Westinghouse Control for Alternating-current Systems, Single-phase Electric Locomotives.

or ten points on a continuous-current controller. This system of speed regulation and control may be briefly outlined as follows: The rail being employed for the return circuit, one side of the transformer is grounded. The potential of the transformer with respect to the

FIG. 446.—Drum-controller for a 50-H.P. Motor Equipment.

ground is, therefore, zero at the grounded end, increasing to the trolley voltage at the other (which may be either 3300 or 6600 volts). By connecting the motors between the ground and taps from the transformer-winding, the desired voltage, and consequently the desired speed, may be obtained without the waste of energy in rheostats or other translating devices. With such control, the motors may be connected permanently in multiple. Placing all the motors in parallel, offers many advantages,

as it subjects them to a uniform and minimum insulation strain, and any motor may be cut out without disturbing the operation of the others.

While an auto-transformer designed with the proper

FIG. 447.—Drum-controller for a Four 50-H.P. Motor Equipment.

taps will furnish the desired voltages, it is necessary, in order to pass from one point to another without opening the circuit or short-circuiting the windings of the transformer between taps, to employ some device, as a

preventive resistance or preventive coil, to take up the intervening voltage. A preventive coil and preventive resistance are provided with each pair of motors. When it is desired to run on different points, as in car-control,

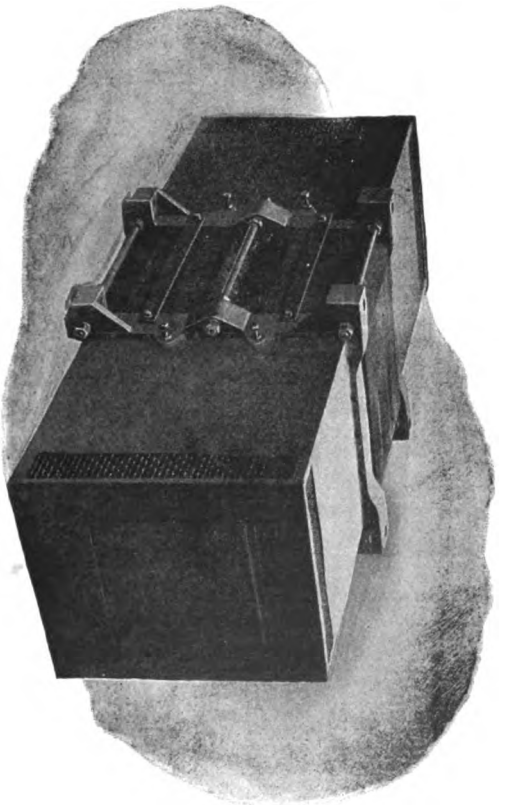

FIG. 448.—Auto-transformer.

the preventive coil has several advantages, inasmuch as it has no choking effect or rheostatic losses on running points, and its own losses are insignificant. This coil enables the motors to be connected in proper sequence

to the various points of the transformer without opening their circuit. The resistance is not essential, but is provided for its cushioning effect in reducing the sparkings at the fingers. No magnetic blow-out is necessary, the heaviest currents being broken without difficulty; in fact the danger of burning out the controller is much less than in the direct-current service.

Fuses to protect the motors against damages from overloads are placed in the base of the controller, one in each motor circuit. Any motor may be cut out by simply removing its fuse. Further protection is provided by a fuse in the trolley circuit, insuring the transformer against damage from overload and against the short circuit that might occur if the A.C. trolley accidentally came in contact with a D.C. line.

* Three sizes of drum-controllers have been developed: the No. 224, which is suitable for the operation of two 50-H. P. motors; the No. 451, which may be used with a four 50-H. P. equipment or with two 100-H. P. motors, and the No. 452, which may be used with four 75-H. P. motors or two 150-H. P. motors. The transformer receives current from the line and delivers it to the motors from taps giving approximately 140 to 250 volts. It may be either oil-insulated and self-cooling or of the air-cooled type. If the latter, a blast of air is furnished by a motor-driven fan placed in a hood at one end of the transformer. This fan-motor receives its power from a low-voltage tap on the transformer, indicating a great advantage of the alternating-current system—that any desired voltage may be obtained by simply bringing out a lead from a suitable point in the winding of the trans-

* At time of writing.

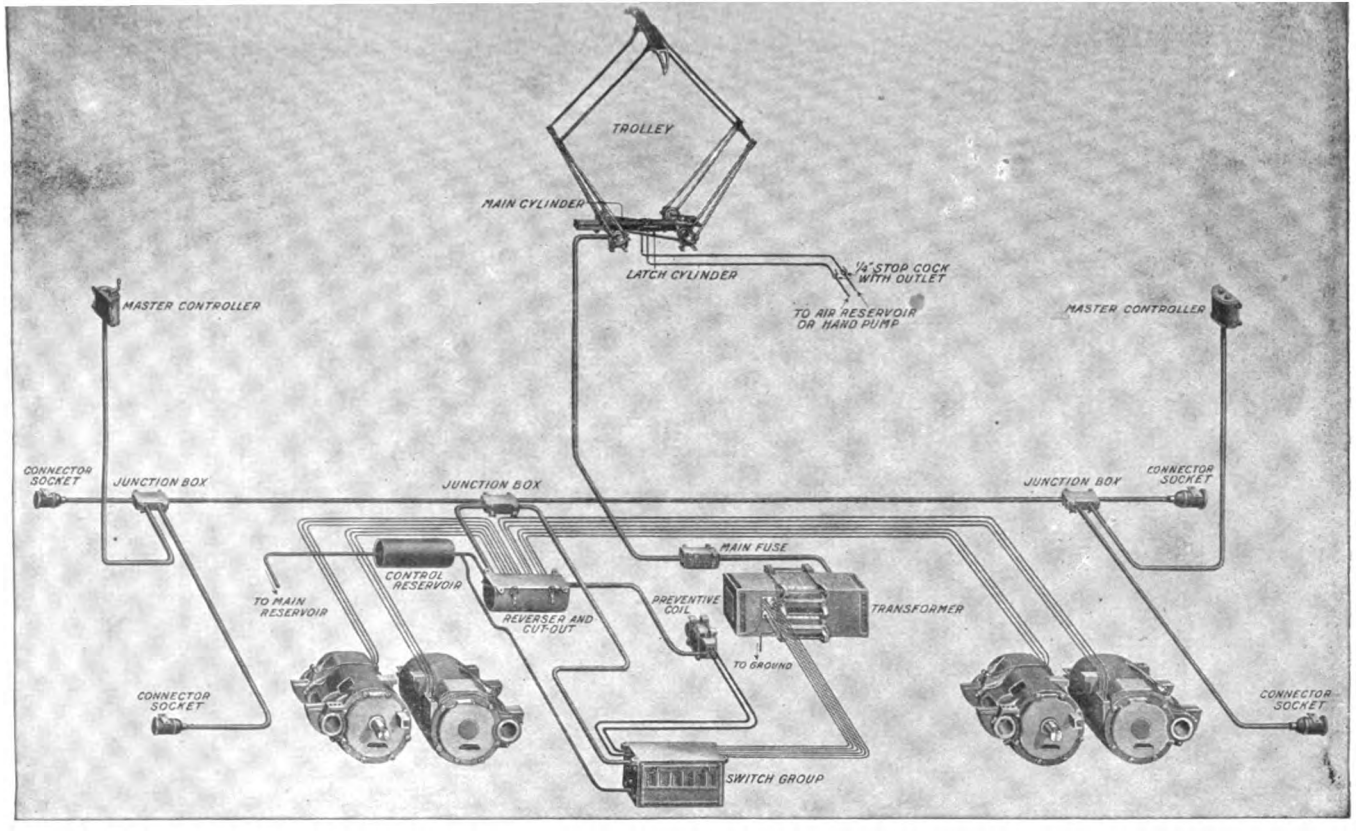

FIG. 449.—Diagram of Unit Switch System of Multiple-control A.C. Locomotives.

former. For this reason small motors, magnets, etc., may be wound for whatever voltage is most economical and convenient.

The auto-transformer with its highly inductive winding placed between the line and the motors offers an effective barrier to the passage of lightning and makes the protection of the equipment against such disturbances a simple problem, as it is easier to protect the stationary windings of the transformer than the moving parts of a motor.

ELECTRO-PNEUMATIC MULTIPLE-UNIT CONTROL.

When locomotives or cars are operated in trains, it is desirable that they all be controlled from a single point. To make this possible the Westinghouse Electric & Manufacturing Company developed a multiple unit system of train-control which employs a combination of electro-magnetic and pneumatic devices by means of which single cars or trains of cars, any or all of which are equipped with motors, may be operated from one platform.* To vary the speed of the motors in the single-phase system, instead of inserting resistance in the motor circuit as in direct-current control, it is only necessary to shift the motors from one set of connections from the auto-transformer to another. A group of switches is provided for this purpose, which are operated by air admitted to the cylinders by means of magnets, which receive their current from a 50-volt tap on the transformer. This enables a low-voltage control-circuit to be used without the necessity of carrying a storage-battery and keeping it charged.

The action of the circuit controlling the valve-mag-

*See Fig. 449.

nets, which regulate the air-supply to the switches of the main control, is governed by a master-controller,

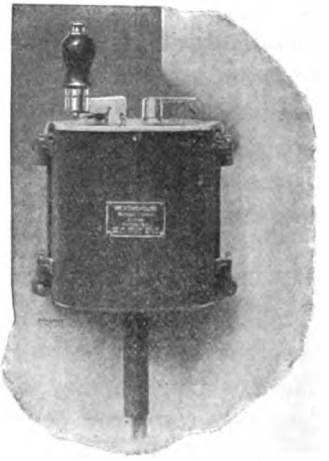

FIG. 450.—Master-controller for Alternating-current Motors.

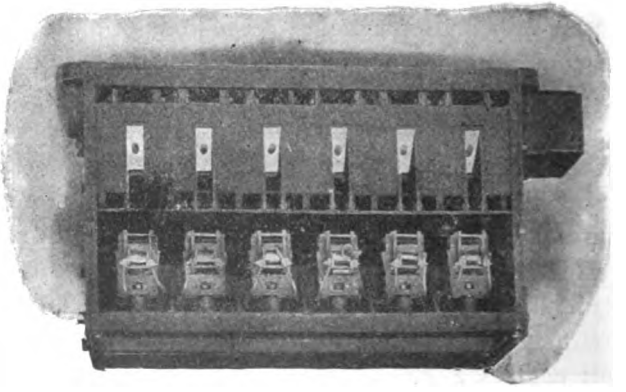

FIG. 451.—Six-unit Switch-group, Alternating-current System.

operated by the motorman or driver. This controller is of neat design, and resembles a small hand-controller in appearance and operation. The reverser is of the

drum type, and is operated by air in a manner similar to the unit-switches. Each motor is reversed independently and may be cut out by removing a link fuse. As

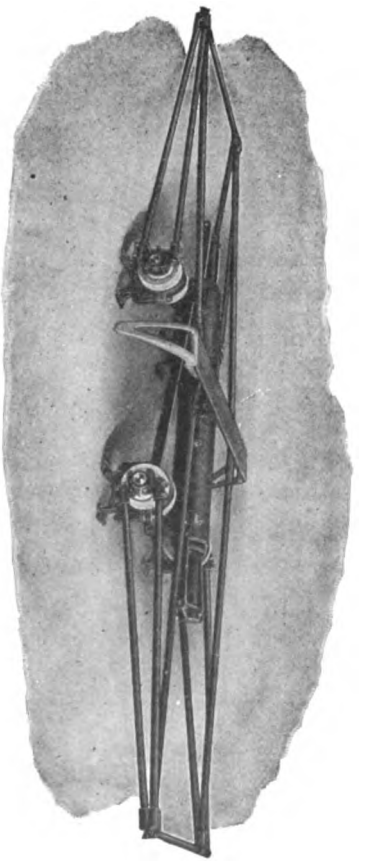

FIG. 452.—Pantagraph Trolley, Lowered.

the reverser is mounted near the side of the car, the fuses are readily accessible by opening the reverser cover, and cutting out one motor does not disturb the others.

Overload protection is provided in all cases, the fuses mentioned furnishing individual protection to each motor. In addition, there is also an enclosed fuse in the main circuit, which protects the transformer and other apparatus. The advantage gained by the use of fuses is, that a desirable time-element is provided and a more individual protection secured for each motor. The system is exceedingly flexible, safe, convenient, and easy to install, economical to operate and maintain, and embodies many features of the greatest value. It is essentially similar to hand-control, except that the voltage is stepped up by the unit-switches instead of by the drum of a controller. The smooth acceleration, with a minimum possible draft of power from the line, combined with a wide range of speeds, all of which are equally efficient, makes this equipment highly satisfactory.

CHAPTER XXVII

NEW YORK, NEW HAVEN AND HARTFORD ELECTRIC LOCOMOTIVE—WESTINGHOUSE SYSTEM. OPERATING ON DIRECT AND ALTERNATING CURRENT.

This locomotive measures 36 feet 4 inches over the bumpers and weighs approximately 85 tons, diameter of driving-wheels, 62 inches. It is capable of handling a 200-ton train in local service on a scheduled speed of 26 miles per hour with stops averaging 2 miles apart, making in such service a maximum speed of about 45 M.P.H. It can handle a 250-ton train on through service with a maximum speed of 60 miles per hour. With heavier trains two or more locomotives can be coupled together and operated in multiple. These locomotives can and do operate on either D. C. or A. C. current systems. The A. C. system is of the 25-cycle current, 235 volts per motor; 300 volts D. C.

Cab.

The general outline is shown in Fig. 453. The cab is of steel and mounted on a framework of Z bars, which support the sides and roof; windows are put in at each end, giving an outlook at each side and in front. The track ahead is in direct view of the driver, he being immediately in front. The master-controllers, auto-transformer instruments, grid-resistance, air-operating valves, compressors, and other auxiliary apparatus are mounted inside the cab upon angle-iron framework which is

built into the cab and anchored to roof and floor, a centre passage from one end to the other is provided in the cab; suitable trap-doors are in the floor for inspecting the motors.

Motors.

Fig. 457 is a view of a motor mounted upon the axle. Figs. 455 and 456 are other views showing the armature

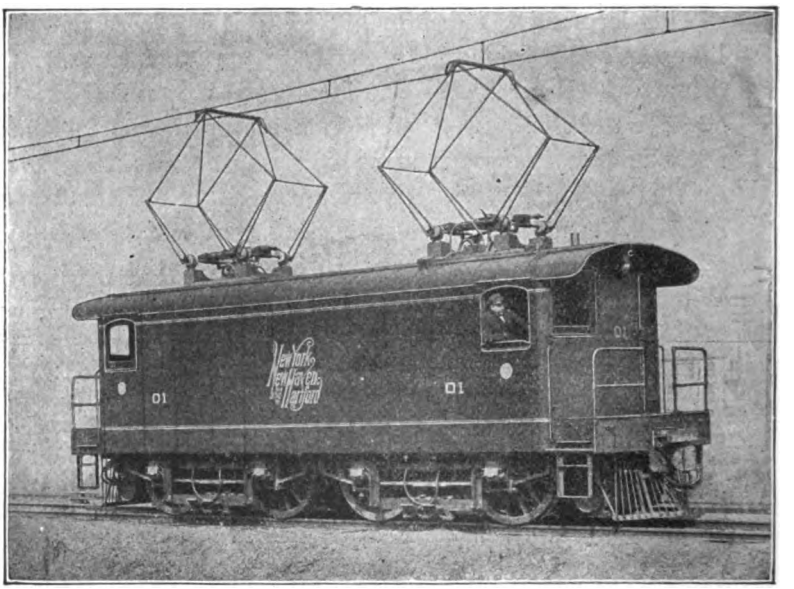

FIG. 453.—Electric Locomotive on New York, New Haven and Hartford Railroad. Weight, 86 tons; diameter drivers, 62 inches; 4 motors, 250 H.P. each; capacity, 250-ton train, 60 miles per hour; 200-ton train, travel schedule, 26 miles per hour; stops, 2 miles apart.

and the driving-quill separate. The armature winding is of the well-known direct-current type; the difference being that in this motor the winding is closed on itself and is not directly connected to the commutator, but is indirectly connected to it through preventive leads, a

feature of the Westinghouse design of single-phase motors. These leads serve the same purpose as the preventive-coils in alternating-current work when passing from one

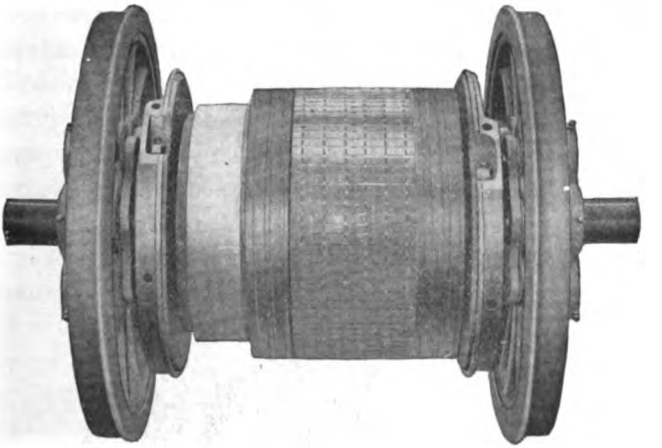

FIG. 454.—A. C. Motor-armature Mounted on Axle

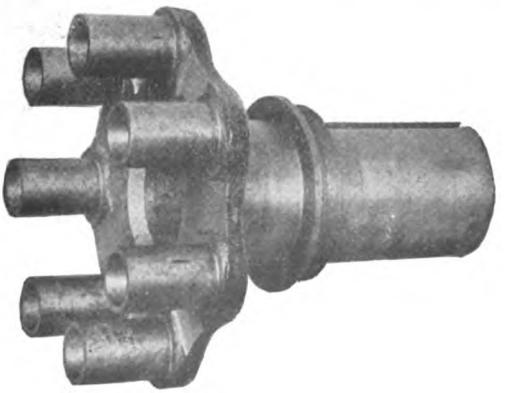

FIG. 455.—Driving-quill.

tap to the other in transformers. The armature in this case may be considered as a transformer with a lead brought out from each coil to a commutator-bar; the

brush in passing from one bar to the other short circuits is intermediate, just as a transformer under similar conditions. The purpose of the preventive leads is to reduce the short-circuited current to a low value when the brush passes from one bar to the next on the commutator. Without these preventive leads there would be an excessive rush of current in starting, and also a spitting at the brush-tips in running. The active winding consists of several coils per slot with one turn per coil. These coils are made from wound straps and inserted from the top of slot, fibre wedges holding them in. There are several brushes per holder, and the construction of brushes and

FIG. 456.—Armature.

holders resemble those in direct-current use. The brushes are $\frac{1}{2}$ inch thick, and are held against the commutator by coil-springs; a flexible copper jumper is used to carry the current to the brush. The brush-holders are insulated from the frame by mica in the form of tubes, which fit over studs riveted to the body of the holder; over each tube is placed a porcelain sleeve and a long metal one.

A clamp serves to squeeze the sleeve tightly against the mica tube, for retaining the brush-holder in place.

Fields.

The field winding, which is of the compensated type, is arranged in two circuits, as the main field-coils, which are placed around the projecting coils and produce the active field flux, and the compensating field-coils, which are placed in slots in the projecting field-pole faces, and hese serve to oppose the armature magneto-motive force and thus neutralize the reaction of the armature. Each pole is provided with a number of slots which contain the neutralizing-coils, they remain at all times electrically in series in the armature-circuit, whether the motor is working on A. C. or D. C. current. The neutralizing-coils are arranged on the poles so that the active field-coils can be removed without disturbing the other coils. During normal direct-current operation the field-coils receive twice as much current per armature ampere as during alternating-current operation. Therefore, in effect, the coils of each motor are arranged in two groups, which are placed in series for direct-current and parallel for alternating-current operation. The active coils of each motor are in reality joined permanently in series, and only two leads pass from the field-frame for this purpose. Two motors are operated as a unit, and the separate field-circuits are placed in series or parallel as desired, according to the current used.

Method of Mounting the Motors.

The motors are of the gearless type, and special means have been provided to attach them to the driving-wheels

to transmit the torque and provide an elastic medium for driving. Means must also be provided whereby the armature remains in the same relation to the poles or maintains the same air-gap between armature and poles at all times—this being a prime essential in alternating-current motors. These points then require that the axle must vary its relation to the armature and fields.

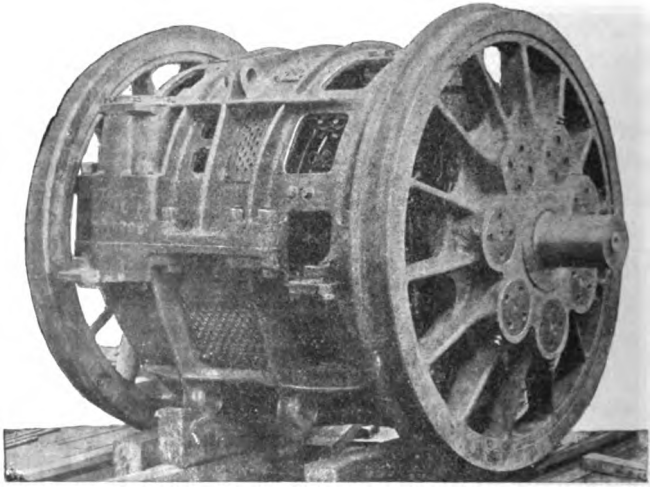

FIG. 457.—Motor Complete Mounted on Driving-axle.

The means for producing these results are shown in Fig. 459; Fig. 457 shows the motor mounted; Figs. 455, 456 show the armature- and driving-quill; Fig. 458 shows the driving-wheel with the pockets for receiving the driving-pins on the quill.

The hollow shaft of the armature is constructed in two parts, as shown in Fig. 455; these two halves are alike and have a disk at one end, upon which there are

pins which are hollow and seven in number. The two halves of the shaft are forced into the hollow armature spider by hydraulic pressure and securely fastened by keys. Fig. 456 shows the key way: a collar is provided on the quill which forms the side bearing on which the field-frame is journalled; the armature is mounted and is placed as shown in Fig. 454. Fig. 459 is a detailed draw-

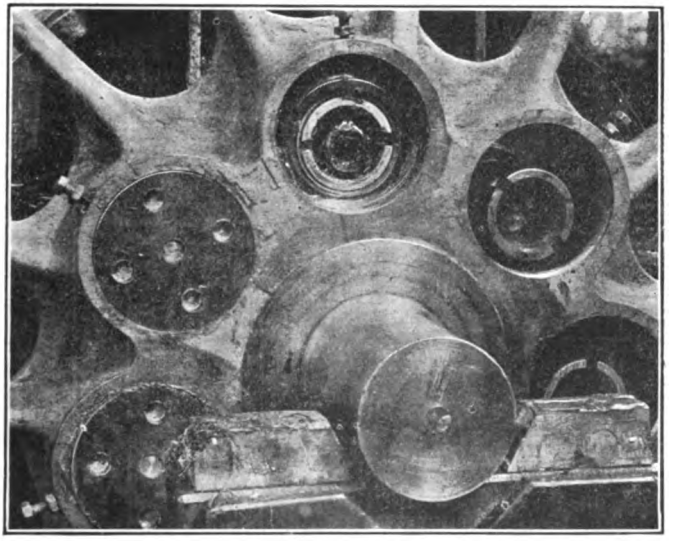

FIG. 458.—Pockets in Driving-wheel for Pins and Springs.

ing of the elastic driving medium. The driving-wheels are provided with seven pockets in the hub, the pins of the armature-shaft project into these pockets with ample clearance between pin and pocket; surrounding the pins is an eccentric helical coil-spring. The spring so constructed will permit of a movement between the driving-wheel and the armature, without changing the position

of the armature in relation to its field, and at the same time have a constant bearing between pin and wheel driven. No matter what position in the revolution of the wheel, there may be a variation or a rise and fall of the axle and driving-wheel. By looking at the drawing it will be seen that alternate coils of this spring bears against the opposite side of pin and pocket.

Fig. 459 illustrates the spring from an end view, showing clearly its construction to provide for lateral move-

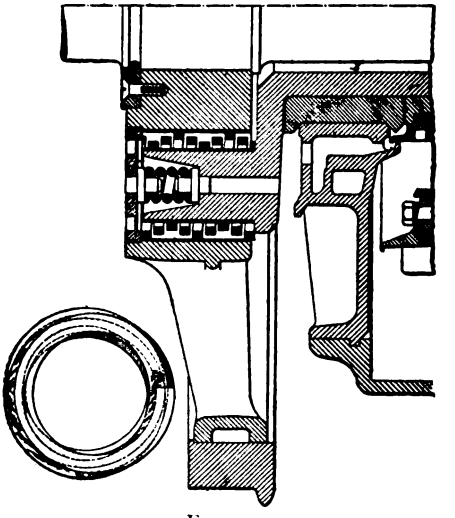

FIG. 459.

ment, the pins being hollow, a pin projects into the driving-pin on which is a coil-spring abutting a shoulder on the pin which it surrounds, another pin is also fastened to the driving-wheel by the caps which are fastened into the pockets and cover the outside ends; it will be understood that there is a clearance between these two pins to

allow for lateral movement. There is a clearance of five-eighths of an inch between the armature-quill and the axle throughout. This allows for the movement between axle and armature. The coil-springs are capable of supporting the whole weight, but in practice they will only transmit the torque to the drivers.

Field Suspension.

In order to resist the back torque of the fields a steel frame is used which is distinct from the truck frame and is pivoted from the journal-boxes of each. From this frame the weight of the motor is carried by springs on rods attached to it; these springs engage lugs on

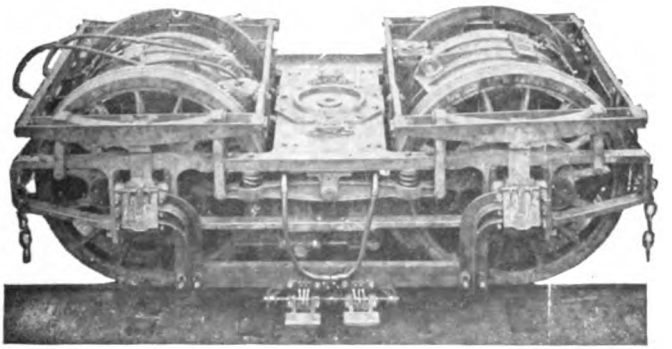

FIG. 460.—Motor Suspension and Framing.

the motor casing. The tension of these springs determine what proportion of the weight of the motor is carried by them and how much will be carried by the pins and springs of armature-quill. The construction is shown in Fig. 460. The truck frame is carried on springs and equalizer bars; the elliptic spring

sets on a saddle over each driving-box. This spring is between the two sides of the side frames supporting the motor, these side bars resting on the same saddle that carries the spring. The split disks shown at each end of the armature rest on the bearings of the armature-shaft, and to them is rigidly clamped the outer-field frame of the motor. The field structure of each motor is thus mechanically connected to its armature structure through two bearings, which will result in the armature, and fields will remain at all time concentric. The central portions of these two bearings are formed on the hollow steel shaft of the armature, and the external portions, which are composed of split-bronze bearings which fit into the field housing the weight of the entire motor, may be carried by the armature-shaft or the field structure.

Trucks and Frame.

The frame is of the rigid type with side pieces made of steel channels, to which are bolted and riveted other steel channels placed transversely two over each truck, forming transverses for the transmission of the weight to the centre pins, these channels are placed outside the driving-wheels close together and as low down as possible, or as the wheels and drawheads will permit, they are braced and squared by substantial steel flooring-plates which are bolted and riveted to the top flanges, the transverses are also braced by gusset-plates which are riveted and bolted to bottom flanges of both sets of channels, these transmitting power from the centre pin to the side channels.

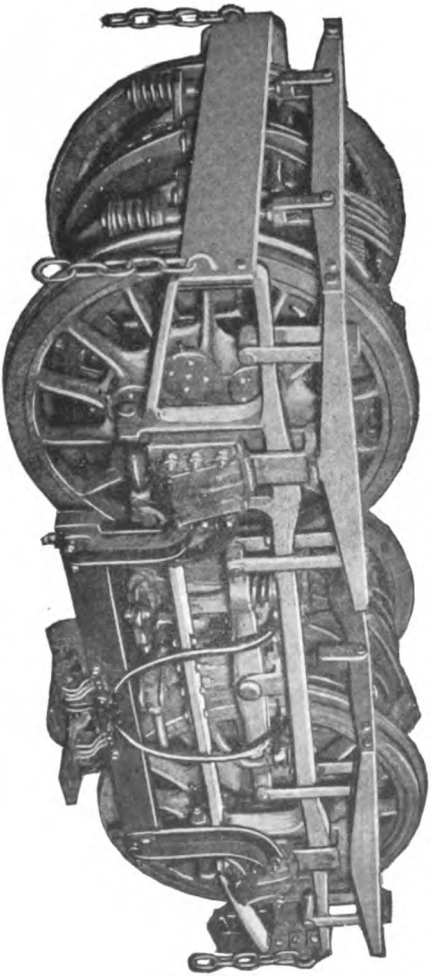

FIG. 461.—Truck Complete, showing Collector-shoe for Third Rail.

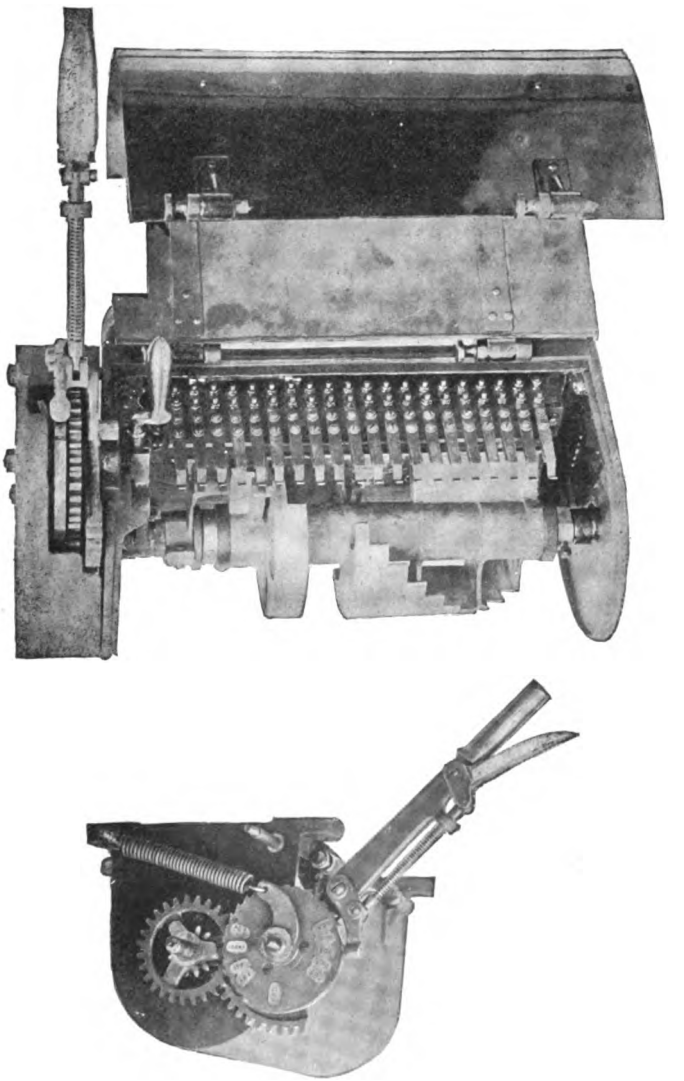

FIG. 462.—Master-controller Open.

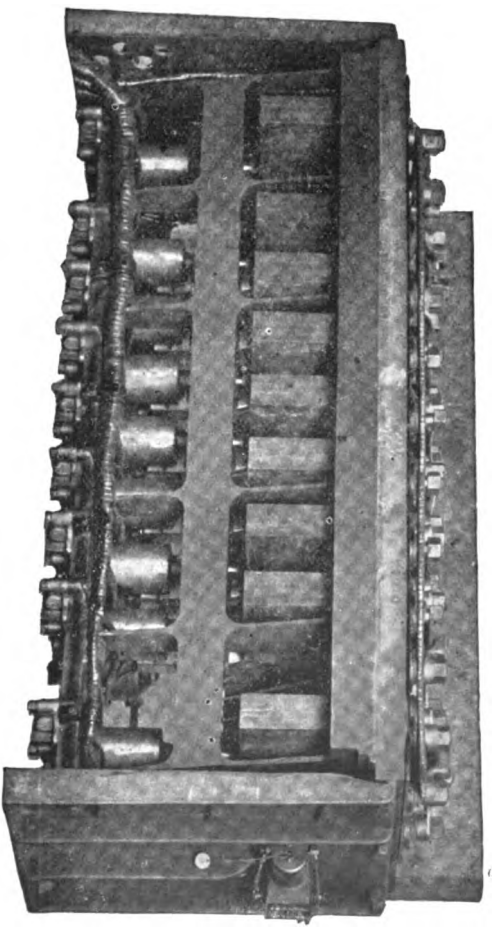

FIG. 463.—Electro-pneumatic Unit-switches.

Multiple Operation.

The locomotive may be controlled from either end by means of a master-controller of the Westinghouse type, the difference from the usual construction is that of the handle. This handle resembles somewhat the throttle-lever of a steam locomotive, and is provided with gear mechanism which permits the drum to be revolved through about twice the arc covered by the lever. (See Fig. 462.) The reverse-lever is immediately below the operating-lever of the controller. The circuits which run to one master-controller are in multiple with those of the other controller, and is the condition when one or more units are connected. These circuits are continued throughout by flexible leads and coupling between each unit or locomotive. This feature permits any number of locomotives to be operated from one master-controller. When the master-controller is on the off position, connections are so made that all circuit-breaker trips which may be open are closed by the simple closing of a small switch placed at a convenient point in the cab. Current is supplied to the controller circuits by two sets of seven-cell storage batteries, each of 40-ampere hour capacity weighing 150 lbs. In connection with the switch groups, cut-out switches are provided so that either pair of motors may be cut out.

Unit-switches.

Each switch used in the motor circuit is of the Westinghouse unit type, operated by air under 80 lbs. pressure and controlled by an electromagnet which receives current from a 14-volt storage battery. There on are the

locomotive three systems of wiring: The 11,000-volt primary circuit to the step-down transformers, the lower-voltage motor circuits, and the battery electromagnetic circuits. The low-voltage motor circuit consists of the circuit from the transformer taps to motors, which is equivalent to a secondary circuit; there is also the equivalent 600-volt D. C. circuits. The high-potential circuits pass directly from the trolleys through the manually operated oil-switches to one terminal of the primary of each of the step-down transformers, the other terminals of which are effectively grounded to the locomotive frame. The lead from the trolleys to the oil-switches is protected by a grounded covering. The only circuit in connection with the master-controller is the 14-volt battery circuit. The danger to driver is reduced to a minimum. The motor circuits pass either from the direct-current trolley third-rail shoe or taps on the secondaries of the transformer to the unit-switches and through the motors to ground. The unit-switches are arranged in groups as shown in Fig. 463, and the switches of each group have their magnetic blowout coils placed mechanically in the same line, so that they can assist each other in producing the magnetic or blowout flux. Each blowout coil consists of two complete turns of built-up copper sheets, insulated to prevent the loss by eddy-current. Precautions are taken to reduce the loss by eddy-currents in the iron coils of the magnets. The pole-faces have slots cut across them instead of being laminated.

Method of Control.

The two motor armatures and their compensated fields are permanently in series and are operated at all

times as a unit. For direct-current work the two motor units of each locomotive are connected in series at starting and in parallel at full speed, while for alternating-current work the two units are operated separately from the secondaries of the transformers at a variable voltage, so that they are joined in parallel at all times.

Although during direct-current operation the familiar series parallel method of control is employed several new features have been introduced, so that the losses during acceleration are equally as small or smaller than would be the case if there was complete-series paralleling of the four motors by the method used ordinarily in four-motor equipment. The motors being of the compensated type will run sparklessly with the fields weakened to any desired extent, and this condition is taken advantage of during the acceleration period, before passing from the series to parallel operation. This fact eliminates a large portion of the loss which would take place in the resistances if the motors were changed directly from the normal-series position, without resistance, to the parallel position with the full resistance in circuit. Much of the lower part of the normal speed range in the parallel position is covered by the motors connected in series with shunted field-coils. The acceleration is very smooth, which condition is caused partly by the facts just stated and also to the fact that in passing from the series to the parallel connection the circuit to neither motor is opened nor is either motor short-circuited.

In the initial starting position one motor-unit is connected in the ground side and the other on the trolley side, with the resistance in series between them; in the final-series position the resistance is out of circuit and

the two units are in series across the line. If now these be connected in parallel with each motor-unit a resistance of a value such that if one half of the line voltage will cause to flow through it a current equal in value to that passing through each motor, the two motor units will in effect be connected in parallel across the line, each unit having in series with it a resistance which is one-half of the line voltage. Under this condition no current will flow directly through the middle-voltage connection between the two motor-units, and this connection may be broken with changing the operation of motors, after which the resistance in series with each motor-unit may be decreased until the two units are directly in parallel across the line. In the middle-voltage connection between the motors is placed a limit-switch, the tripping-coil of which is so adjusted that the change from the series to the parallel position cannot take place until the current in this connection decreases to a certain predetermined value.

During alternating-current operation each motor-unit is supplied from the secondary transformer at variable voltage, there being two separate and distinct transformers on each locomotive. By the described arrangement of transformers several points were gained, the equal distribution of weight increasing reliability of service in case one transformer or circuit should be disabled, the convenient arrangement of unit-switches and the employment of the same unit-switch and master-controller for either direct- or alternating-current operation. At each running point the motor circuits are joined directly to a certain tap on the transformer winding, and no extra resistance in circuit. In passing from one tap to the

other or next higher voltage the usual method is followed, that of first inserting resistance between the taps, connection to lower-voltage tap being broken, thereby placing the resistance in series with the motor at the higher voltage, then the resistance is short circuited, leaving the motor joined directly to the higher voltage. The preventive resistance used between the taps is exactly the same resistance unit which is used at certain steps in the direct-current control, while the same short-circuiting witch is used in each case.

Auxiliary Devices.

All the controlling mechanism is placed in the cab, the electric cables and air-pipes are carried beneath the floor. In addition to the various unit-switches and transformers there is in the cab an air-compressor driven by a compensated field-type motor. The circuits of this motor are controlled automatically by compressed air, the reservoir or receiver, which is in the cab. The four main motors, the high-potential transfo mer, and the circuit rheostats are cooled by air furnished at low pressure by means of a motor-driven centrifugal blower, which obtains air from the inside of the cab, the low-pressure air has two paths, one path passes first through the transformer and then through the rheostats, the other path goes directly to the main motors. It enters the armature near the shaft, passes around and between the armature laminations, flows outward through the ventilating-ducts in the field-coils, and reaches the outer air through caps perforated on the frame of motors. In order not to have air of a high velocity a large flexible canvas duct is placed between the air-passages on the cab and those on the

motor proper. This conduit is made up of heavy canvas tubing which is reinforced by wire and given an accordion pleating.

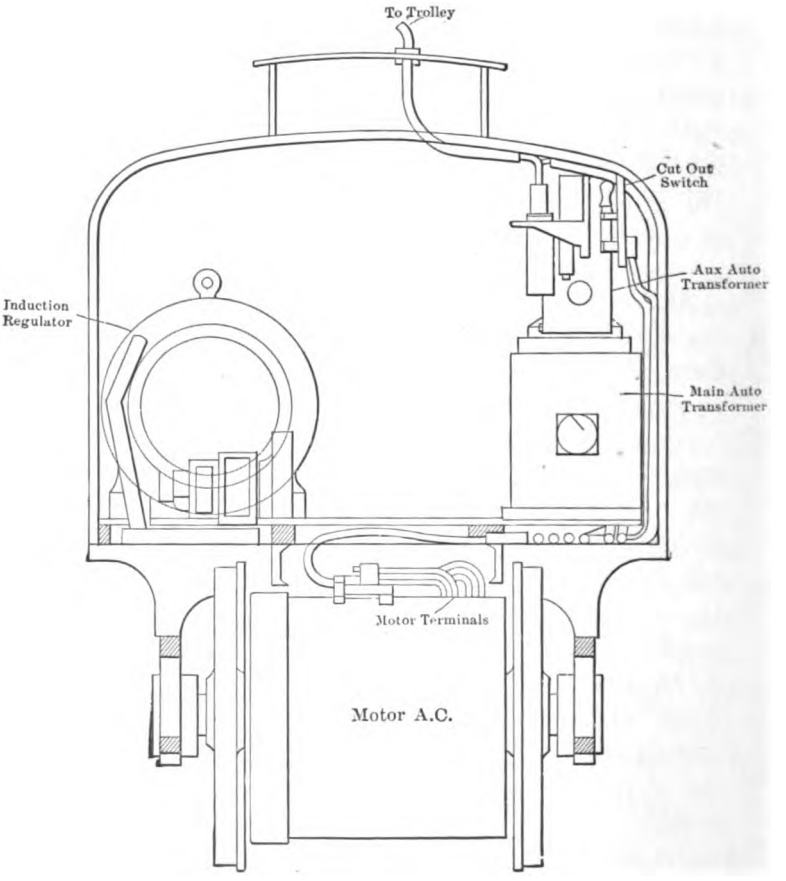

FIG. 464.—Section through Locomotive showing apparatus.

Figs. 464 and 465 show the general diagram of the Westinghouse locomotives, showing positions of wires,

controllers, auto-transformers, compressors, and unit-switches as placed in the locomotives.

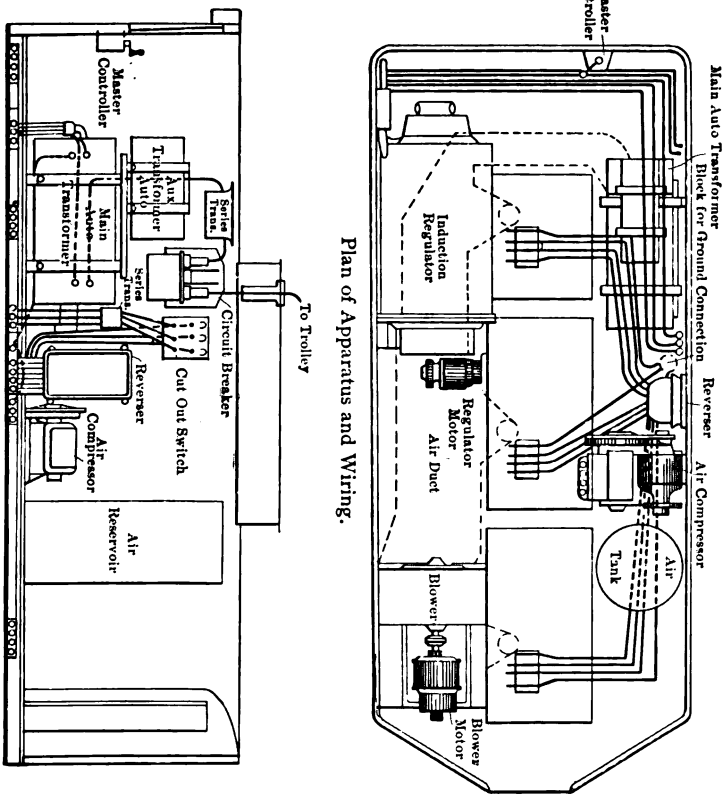

Plan of Apparatus and Wiring.

Elevation showing Apparatus.

FIG. 465.

Current-collecting Devices.

There are two pantagraph bow-trolleys for collecting the current from the 11,000-volt overhead conductors, the upward pressure against the wire is supplied by springs

in the base of the pantagraph. Compressed air is admitted to a cylinder when it is desired to lower the collector. When the collector is in its lowest position a catch engages the mechanism and holds it in place, the catch can be released by means of an electro-pneumatically operated lever when compressed air is on hand or it can be released manually, the framework of the pantagraph is built up of steel tubing and the collector bow is a broad strip of soft copper. The collector mechanism is mounted on heavy porcelain insulators on the roof and bolted.

There is also provided an additional pantagraph trolley for direct current which is somewhat lower; there are also contact-shoes for the third-rail system. These contact-shoes may be raised automatically by compressed air, so that they will not strike any object after leaving the third rail (Fig. 461).

CHAPTER XXVIII.

AIR-BRAKES FOR ELECTRIC LOCOMOTIVES AND CARS.

WESTINGHOUSE ELECTRIC MOTOR-DRIVEN AIR-COMPRESSOR.*

THE type of compressor which up to the present has most satisfactorily filled the requirements of electric-traction service has two single-acting cylinders located side by side and operated from the same crank-shaft. The shaft is driven through herring-bone gears by a motor which is located either at the side or above the crank-case. When located at the side of the crank-case the motor is self-contained, and may be removed for repairs and testing, and another substituted. Access to the interior of the crank-case is also permitted by simply removing the cover. With the motor located above and forming a cover for the crank-case, as shown in Fig. 471, a saving in weight is effected, but at a sacrifice of convenience of access to the crank-case. Fig. 467 shows a partial horizontal section of a compressor with self-contained motor. In Fig. 466 this same compressor is shown with a section through the valve-chambers located in the cylinder-head. As indicated by the arrows,

* For equipment the reader is referred to chapter on Westinghouse air-brakes as applied to steam roads, which includes cars and electric locomotives using automatic brakes.

the air is drawn through two perforated screens, with a layer of curled hair interposed to prevent dust from passing into the interior of the compressor. From the

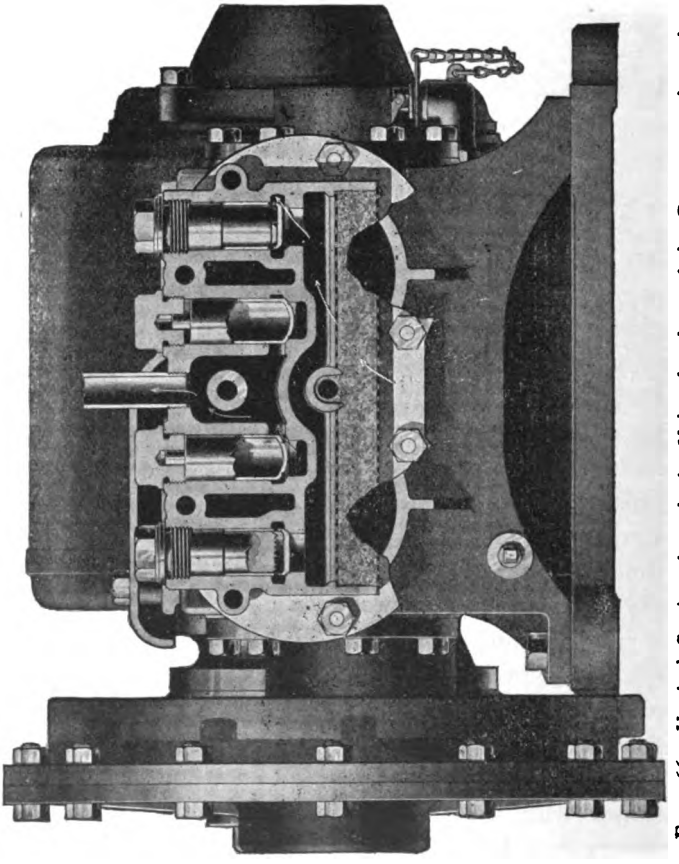

FIG. 466.—Vertical Section through the Valve-chambers of the Compressor shown in Fig. 467.

suction-chamber above the screens the air passes into one or the other of the cylinders through its suction port located at the extreme right or left. It is forced

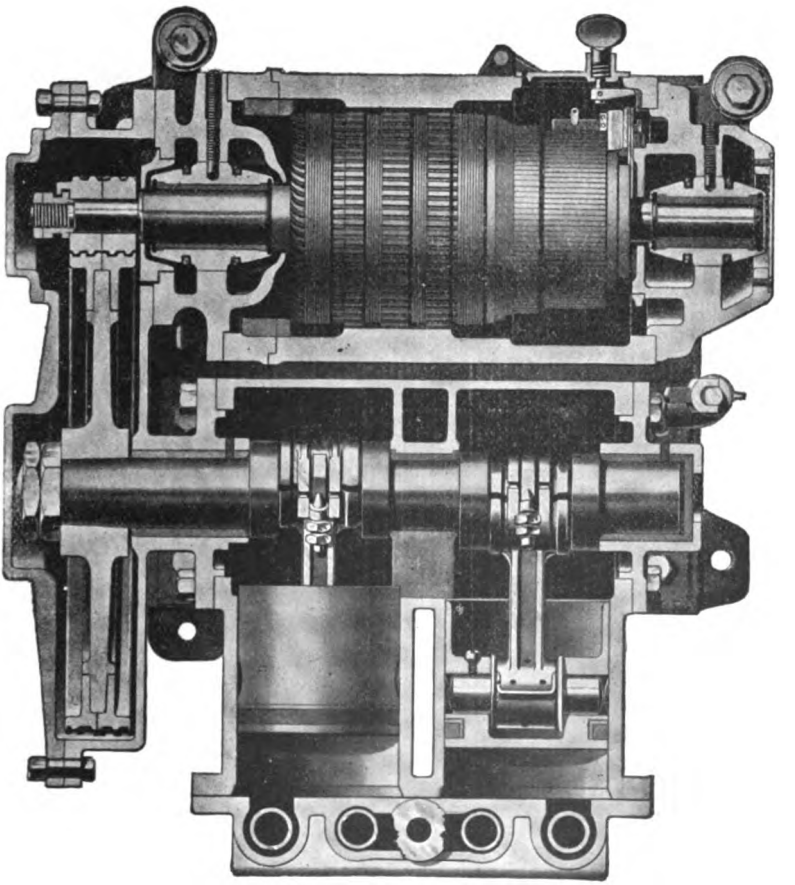

FIG. 467.—Horizontal Section through a Compressor with Motor at Side of Crank-case.

from the cylinder through the discharge-port into the discharge-pipe. From Fig. 468 it will be noted that this form of compressor is completely enclosed, as is the practice with railway motors which operate under

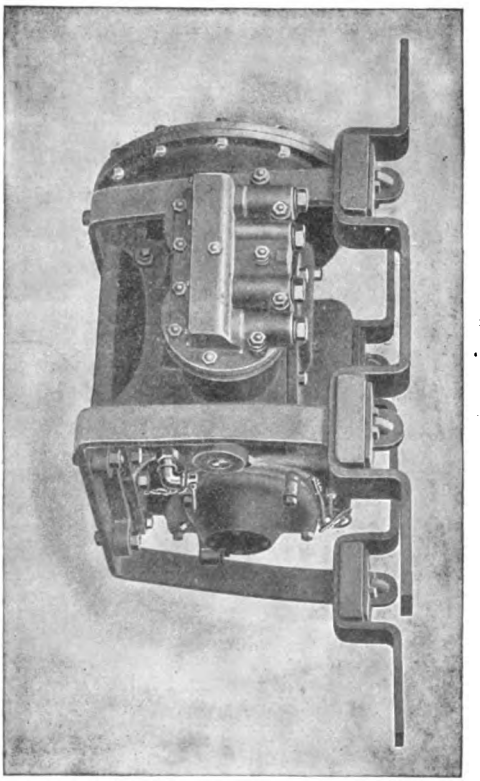

FIG. 468.—Rain- and Dust-proof Compressor with Cradle for Suspension under a Car.

the same conditions of exposure to dust and splashing water. This illustration also shows the standard method of suspending this compressor from the car body. To remove the compressor it is only necessary to disconnect

the wiring and piping and take out the keys in the four ends of the cradle, after having raised the compressor about half an inch. There are no nuts or bolts to be taken out.

In Fig. 469 is shown a compressor of the other design. Its motor is of open construction, and for protection a

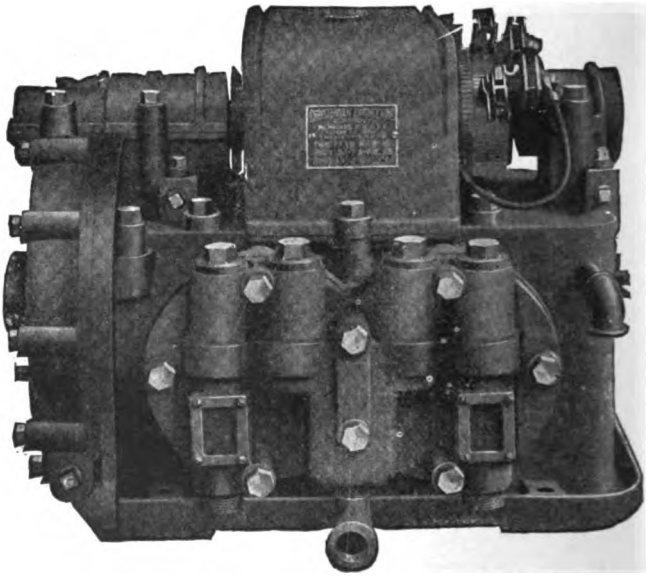

FIG. 469 .—Motor-driven Compressor with Motor above Crank-case.

box must be provided which makes the total weight per unit of output practically the same for these two forms of compressors. In Fig. 470 the compressor is shown in its box and cradle as it is hung under the car or locomotive. Either of the four sides may be removed or the entire box can be slid off the base, provided the compressor is located far enough away from the balance of the apparatus under the car.

The lubrication of both designs of compressors is automatic. The crank-case is filled to the level of the oil-orifice and the cranks, dipping into the oil, throw it onto the parts requiring lubrication. This oil level

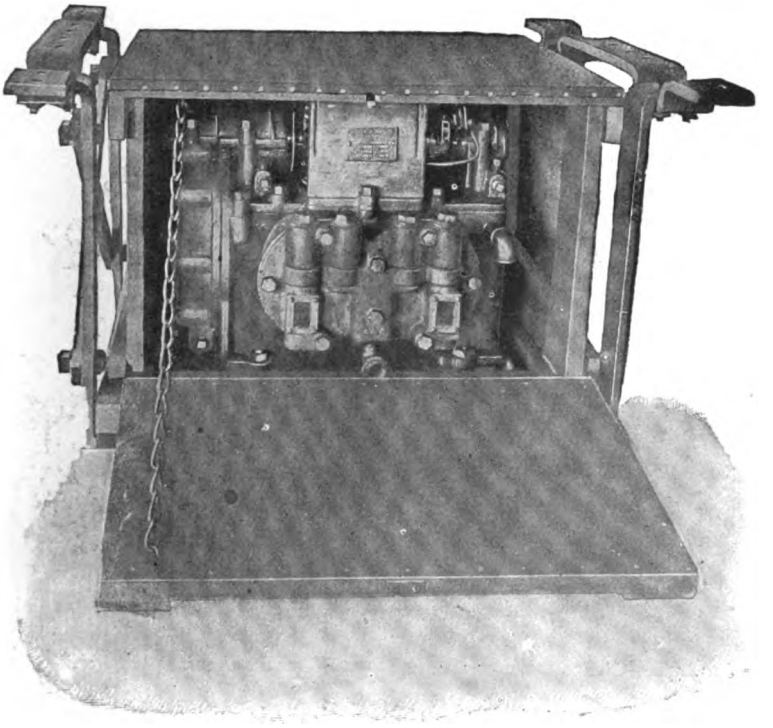

FIG. 470.—Enclosing Box and Supporting Cradle for Compressor with Motor above Crank-case.

extends to the gear-case for the lubrication of the gears, and the pinion-end bearing of the motor also receives oil from this source. The commutator-end bearing has a separate oil-well. Both bearings are provided with oil-rings.

For air-brake service this type of compressor is built in four sizes of rated capacities based upon piston-displacement, ranging from ten to fifty cubic feet of free air per minute. For a given brake service such a size of compressor should be selected that, when new and

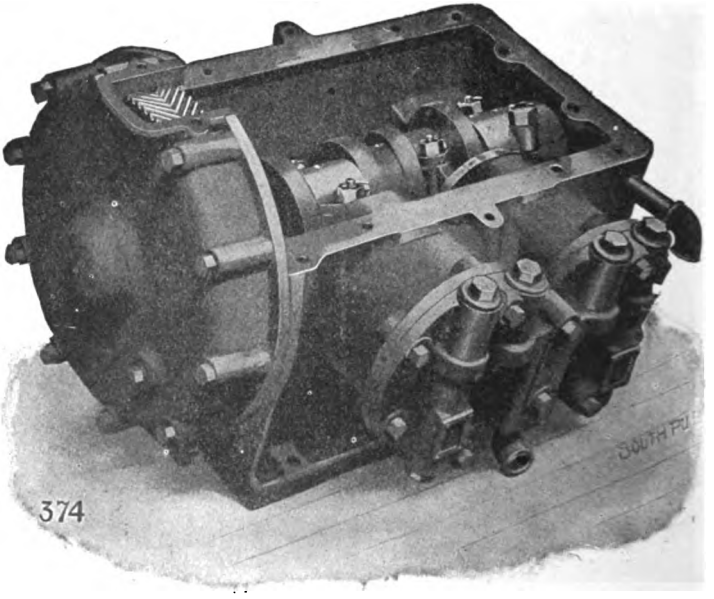

FIG. 471.—Compressor of which the Motor Forms the Crank-case Cover.*

running one third of the time or less, it will supply the normal amount of air required. When its efficiency has fallen off, due to a long period of service, this same compressor will have to run about half the time to supply

* Westinghouse air-compressor motors used on locomotives using alternating current have a compensating field-winding on the field-poles with laminated field-cores, and can be used with either direct o alternating current.

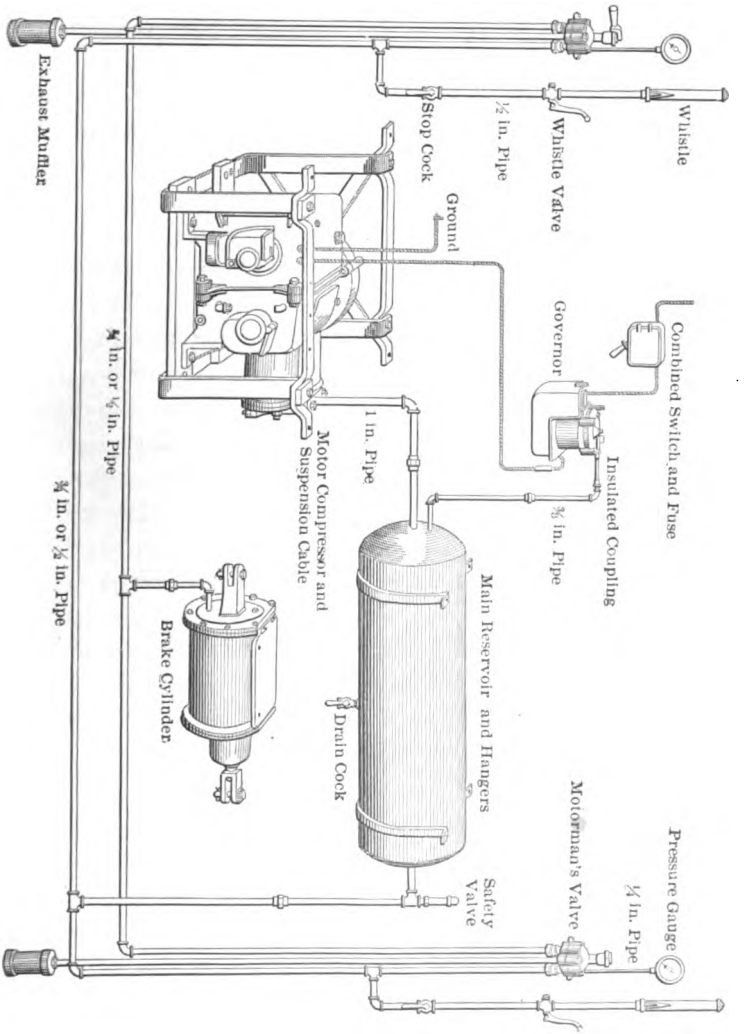

FIG. 472.—Straight Air-brake Equipment.

the same amount of air. Under these conditions should an emergency arise, such as a leak or derangement of some part of the apparatus, the compressor would still be able to supply the requisite amount of air, by running continuously for the balance of the trip. Unlike a steam-driven compressor the capacity of an electrically driven compressor cannot be increased by simply opening the throttle wider. Consequently, in order to keep the weight down and to decrease the cost, these compressors are not made for continuous operation against their normal pressure of 75 to 100 pounds per square inch. By designing them for intermittent service aggregating 50 per cent of each hour, a lighter motor working normally with a 20 per-cent overload may be used, and the temperature rise be kept so far within the safe limit that an occasional run of an hour continuously will produce no injury. When this type of compressor is to be run continuously it must be water-jacketed, and the capacity of the motor correspondingly increased. The commercial efficiency of these motors should range from not less than 75 per cent for the smaller size to 85 per cent or better for the larger sizes. The cylinder efficiency, or the ratio of the volume of free air actually delivered to the volume swept through by the pistons in the same period, should not be less than 70 per cent for the smallest compressor, or 85 per cent for the largest, these tests to be made when the compressor is cold, the piston packing well seated, and no lost motion in the bearings. These efficiencies will decrease as the compressors become heated or worn in their bearings, but are a reasonable standard for compressors in first-class condition.

In small motor-driven compressors, just as they come

from the manufacturers, a considerable proportion of the electrical input may be consumed in mechanical friction, due to the close fitting of the various parts. After the compressor has been in service a little while, if the motor is efficient, the design of the compressor good, and the valves and packing tight, its output should be the maximum attainable with this type. When working against 90 pounds' pressure 275 cubic feet of free air per kilowatt hour of electrical input is a good output for intermittent operation, but to attain this it is necessary to keep the piston-clearance at a minimum and the valves tight.

Th enclosing of a compressor in a box, through surrounding it with warm air and protecting it from the cooling effect of the draft created by the moving car, decreases its efficiency about 25 per cent. When boxed in, the compressor cannot be so readily inspected, but its external surfaces remain cleaner. This great and continuous loss in efficiency is, however, a high price to pay for cleanliness, which, with the enclosed type, may be obtained in a few minutes with a jet of water.

GENERAL ELECTRIC STRAIGHT AIR-BRAKE EQUIPMENTS.

The straight air-brake system consists essentially of a source of compressed air, a brake-cylinder, and a simple valve under the direct control of the motorman, the function of which is to control the admission and exhaust of the compressed air to and from the brake-cylinder as desired. A diagram showing the connections of the different parts of this system is shown in Fig. 472.

The standard straight air-brake equipment consists of the following parts:

Motor-compressor; suspension cradle for compressor;

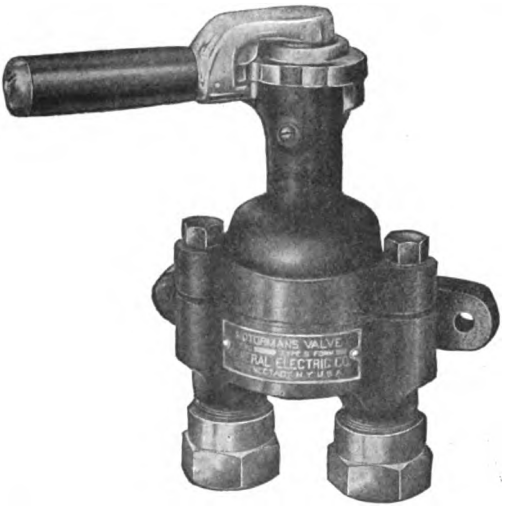

FIG. 473.—Motorman's Valve, Type S, Form B.

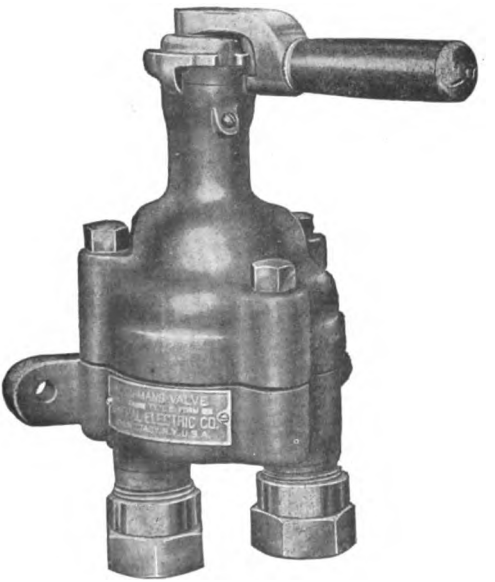

FIG. 474.—Motorman's Valve, Type S, Form C.

air-compressor governor; combined switch and fuse; engineers' valves; removable handle for engineers' valves; brake-cylinder; reservoir with hangers and drain-cock; safety-valve; pressure-gauges and exhaust-mufflers.

Air-compressors.

The motor-compressors manufactured by the General Electric Company have duplex horizontal cylinders and

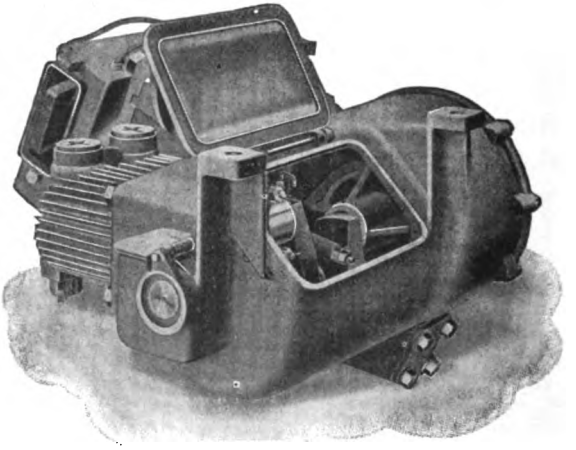

FIG. 475.—Air-compressor

herring-bone gear-drive; they are designed to be supported from the car body in a suspension cradle. This cradle is constructed in such a manner as to permit the removal of the compressor when necessary, with a minimum amount of labor and without removing the cradle from the car body. The compressor is of the enclosed type and all parts are thoroughly protected

from dust and water, and, therefore, no external enclosing box or other covering is needed.

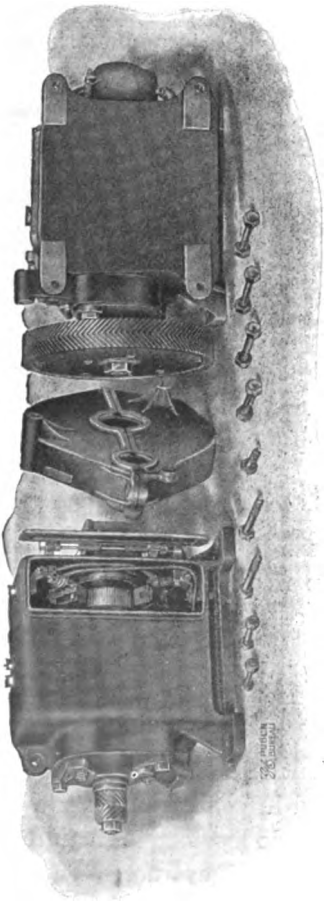

FIG. 476.—CP-22 Form B Air-compressor with Motor and Gear-case Removed.

The supply of air is drawn into the cylinders through curled-hair strainers, which are contained in a removable casing on the cylinder-head. These strainers, in effectu-

ally preventing the entrance of dust and dirt to the cylinders, increase the life of the compressor and reduce the cost of maintenance of the entire brake equipment.

A feature that will be thoroughly appreciated by the

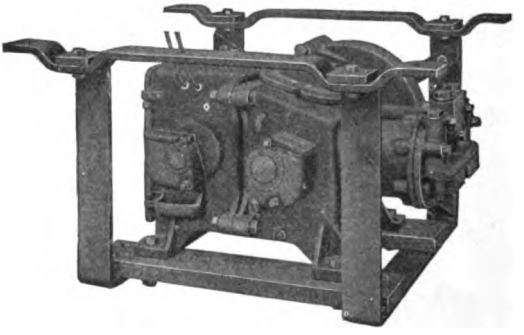

FIG. 477.—CP-22-B Air-compressor and Suspension.

engineer and the mechanical department is that all parts are readily accessible for inspection or renewal. These compressors are perfectly adapted for any class of work requiring the use of compressed air.

Type MC Governor for Electrically Driven Air-Compressors.

The independent motor-driven air-compressor, now so extensively used in connection with the brake system of the modern electric locomotive, requires for successful operation an automatic governor. The purpose of this governor is to stop the compressor motor when the desired maximum air-pressure has been reached, and to start it whenever this pressure falls below a predetermined minimum. The difference between the maxi-

mum and minimum pressures is usually ten pounds. The reliability of the governor is the most important factor in insuring continuity of service and a ready and positive control of the car or locomotive by means of the air-brake system.

General Description.—The varying pressure of the air against a diaphragm actuates a set of operating-levers,

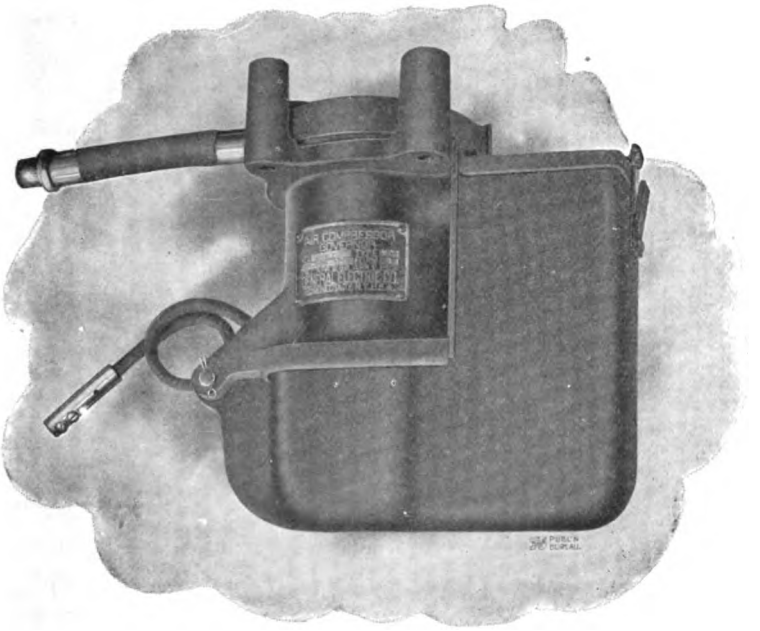

FIG. 478.—Air-compressor Governor, Type MC.

one of which carries the contact-finger by means of which the motor-compressor circuit is made and broken. The forms of contact, arc-chute, and magnetic blowout are similar to those employed in the contactors used in the Sprague-General Electric Type M control, this construc-

tion having been found to be far superior to any other form of current-interrupting device. Friction and leakage, usually experienced in connection with pistons and packing rings, are entirely eliminated by the use of a thick diaphragm of pure rubber. This forms a hermetic sea

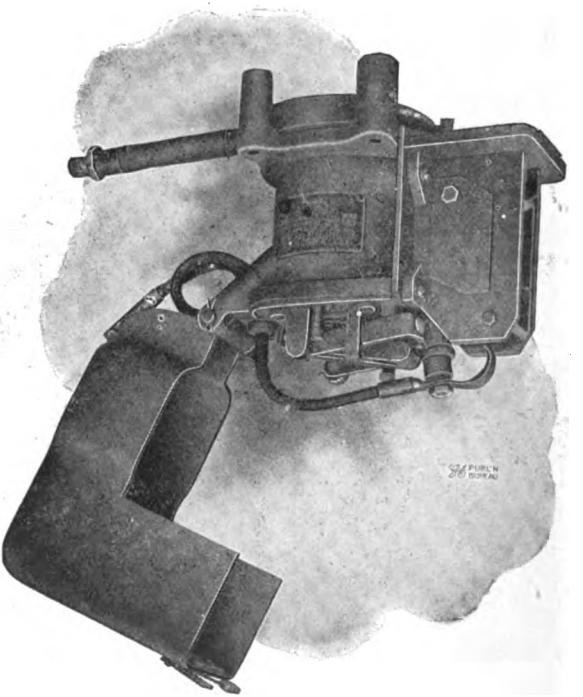

FIG. 479.—Air-compressor Governor, Type MC, with Cover Lowered.

and prevents any leakage or flow of air through the governor, thus obviating the difficulties due to con densation and freezing of moisture, which always occurs when there is any flow of air through the governor mechanism. This construction, together with the absence

of valves of any sort, insures the utmost reliability of operation.

The Type MC governor occupies a space $5\frac{3}{4}$ inches in width and $9\frac{7}{8}$ inches in length, and has a depth of $10\frac{3}{8}$ inches. For traction work it is designed to be bolted directly to the bottom of the car in the position illustrated. For locomotive purposes, however, it may be placed in any position desired.

The operating parts, contacts, and adjustments are protected from dust, dirt, and mechanical injury by a tightly fitting cover which can be easily opened for inspection. This cover also serves to exclude snow, brake-shoe dust, and wheel wash, permitting the governor to be used without any enclosing box.

Adjustment.—Accurate adjustment for various maximum pressures within the range of the governor is readily obtained by means of adjusting-screws provided for this purpose. The difference between the opening and closing pressures is usually ten pounds, as this has been found to best meet the requirements of railway service. Governors of this type can be furnished for any desired pressure.

Rating.—In these governors the following system of rating has been adopted: The type letters are followed by a series of three numbers and a form letter. The first number denotes the lowest and the second number the highest pressure at which the governor can be set to open. The third number denotes the difference between the opening and the closing pressures. For example: MC 60–100–10 Form B denotes a governor of the MC type, which can be adjusted to open at any pressure from 60 to 100 pounds per square inch inclusive, and to close with

a reduction of ten pounds' pressure below its opening point. The form letter indicates a particular design of that type of governor. The following are standard governors of this type:

MC 40–60–10 Form B
MC 60–100–10 " "
MC 100–140–10 " "

Construction.—The accompanying illustration shows a sectional view of the Type MC governor. The cylinder-

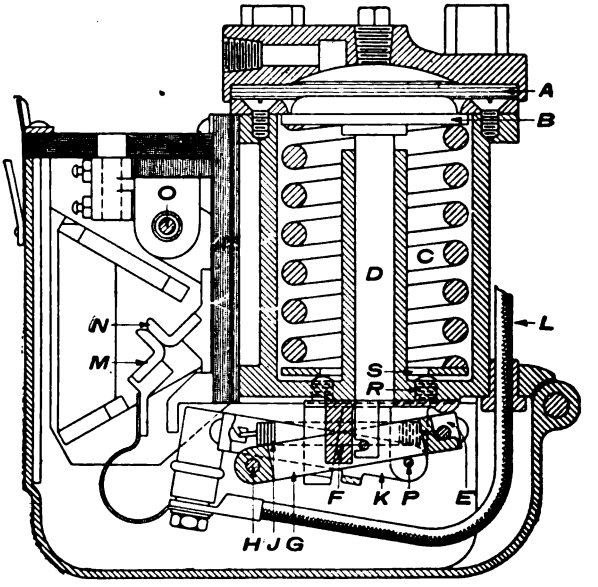

FIG. 480.—Cross-section through Governor.

head is provided with a tapped hole for the insulated pipe which affords connection between the governor and the compressor reservoir. The head is so constructed that

this connection may be placed at the back or at either side of the governor, as desired. It is bolted to the frame and holds the rubber diaphragm *A* against the retaining ring. This ring serves as an abutment for the piston *B*, against the upper surface of which the diaphragm *A* is pressed. The lower side of the piston is acted upon by the operating-spring *C*, the pressure of which is adjusted by means of the screws *R* bearing against the washer *S*. Attached rigidly to the piston *B* is the rod *D*, the lower end of which is connected to one of the operating-levers. The largest of these levers is provided with a recess into which a mica-insulated stud has been forced by hydraulic pressure. Attached to the stud are the cable terminal and the spring carrying the contact-finger. The finger-tip through which the circuit is completed and broken is so made as to be readily renewable when worn. This finger completes the circuit through the stationary contact, the tip of which is also renewable. Enclosing these contact members is the arc-chute, which is composed of a special molded insulating compound, and is provided with renewable plates of a highly refractory material. This material has the property of resisting the action of the electric arc to a greater degree than any other similar compound. In series with this circuit is the blowout coil *O*, for producing the magnetic field, which extinguishes the arc when the circuit is broken. This coil is made of enamelled copper ribbon wound edgewise, and connected with it is the line terminal, which is provided with two set-screws for clamping the wire. The protecting cover is hinged at the back of the frame and is held in the closed position by a spring-catch. On the inside of this cover adjacent to the arc-chute

is a plate of insulating material which prevents the possibility of the arc striking the metal.

Operation.—The action of this governor in opening and closing the motor-circuit of the compressor is as follows:

As the compressor continues to operate, thereby increasing the pressure of air in the reservoir, the pressure in the chamber above the diaphragm *A* rises and forces

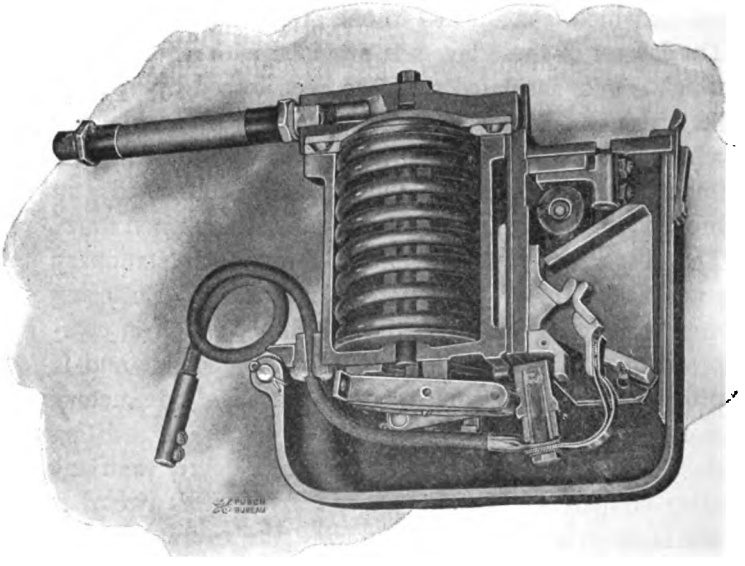

FIG. 481.—Section of Air-compressor Governor, Type MC.

the piston-rod *D* downward against the action of the operating-spring *C*, turning the lever *E* around its fulcrum *F*. This brings the pivot *H* above the centre line of the tension springs *J*, which connect the intermediate lever *G* with contact-carrying lever *K*. The

action of these springs then pulls the end of the intermediate lever downward; this movement quickly carries the centre line of the springs past the pivot *P*, thus reversing the action of these springs on the contact-carrying lever *K*, and causing the free end of this lever to be drawn downward, separating the contacts *M* and *N* with a quick snap.

The object of this double system of levers is to maintain a constant pressure between the contacts until the tripping point is reached, thus preventing the possibility of burning at the contacts.

As the pressure in the reservoir is reduced, the piston-rod *D* raises the rear end of the lever *E*, a projection on which engages with the intermediate lever *G*. This carries the centre line of the tension-springs *J* above the pivot of the contact-carrying lever *K* and thereby pulls the contact-finger upward, quickly closing the circuit.

Installation.—In locating this governor care should be taken to connect it directly to the reservoir, thus avoiding as much as possible all pulsations in the air-pressure due to the operation of the compressor, or due to a reduction of air-pressure in the pipe leading from the main reservoir. This pipe-connection to the governor should be as short as possible, should slope downward toward the reservoir, and should be free from all pockets where moisture might collect and cause trouble by freezing.

Combined Switch and Fuse.

A combined switch and fuse of substantial design and fire-proof construction is provided for the compressor

circuit. It is capable of opening the circuit positively under all conditions.

All the current-carrying parts are enclosed in molded insulation, and a powerful magnetic blowout is provided for extinguishing the arc. The fuse, being of the well-known enclosed type, is placed in a separate com-

FIG. 482.—MS 40-A Combined Switch and Fuse.

partment, which is isolated from the switch by barriers of insulation. Both the switch and fuse are readily accessible by opening the cover, which is held closed by a simple latch. This combination switch and fuse is shown in the accompanying illustration.

Engineers' Brake-valves.

The engineers' brake-valve, supplied with the straight air-brake equipments, consists of a three-way valve; its three positions are respectively (1) "application," (2) "lap," and (3) "release." When the handle is in the "application" position the valve admits the air from the main reservoir to the brake-cylinder; when in the "lap" position it closes all connections, thus

retaining in the brake-cylinder whatever air has previously been admitted, and when in the "release" position connection is made from the brake-cylinder to the atmosphere, exhausting the air and releasing the brakes.

These valves have been specially designed to meet the requirements of the hard service and rough usage to which they are necessarily subjected. The Type S, Form C, motorman's valve which is usually furnished, is of the slide-valve type (Fig. 483). The valve proper

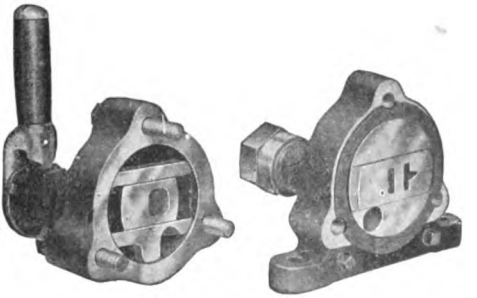

FIG. 483.—Type S, Form C, Engineers' Valve showing Raised Seat.

operates on a raised seat and is surrounded by a removable yoke, which fits closely at the edges of the seat and serves as a guide to keep the valve in proper alignment. This form of construction not only facilitates regrinding, but also prevents any uneven wearing of the ground surfaces or valve-seats.

For the purpose of preventing any leakage of air past the valve where the stem passes through the top of the bonnet, a square-shouldered flange is provided. This flange is made as an integral part of the valve-stem, and bears against a similar but fixed ground surface on the interior of the bonnet, the two together forming a perfectly air-tight surface.

Two types of these valves are manufactured by the General Electric Company. The first, known as Type S, consisting of a plain valve, as described and illustrated above, is used in equipments where the only function required of the valve is to operate the brakes. The second, the Type SS, is for operating equipments furnished with pneumatic sanders, and differs from the first only in the addition of an auxiliary valve set in the stem of the main valve. The function of this auxiliary valve is to control an additional port in the pipe-con-

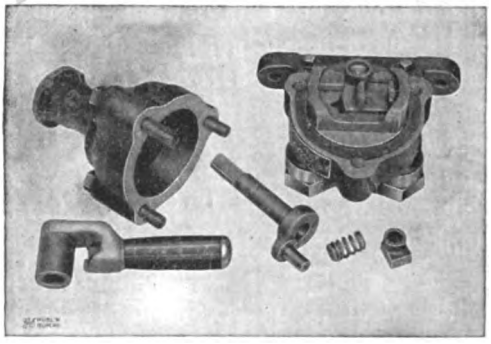

FIG. 484.—Parts of Type S, Form C, Engineers' Valve.

nections leading to the pneumatic sanders; it is operated by a press-button located immediately above the valve-stem and attached to the head of the handle. The operator can press the button without releasing his grasp on the handle. This forms an easy method of operating sanders either during braking or running.

The stem on both types of valve is protected, when the handle is removed, by an extension provided on the bonnet, which prevents the valve being turned either on the rear platform or when the handle is removed.

The operating handle is provided with a special molded compound grip of close-grained black fiber, which, unlike the brass or composition grips usually employed, is not injurious to the hand, and, therefore, the necessity for any additional protection for the motorman's hand is avoided. The head of the handle which engages the upper end of the valve-stem is made of hard gun-metal, which practically prevents wear and, consequently, any lost motion between the handle and valve-stem. The valve-stem is also made of gun-metal.

The General Electric Company also manufactures a rotary type of valve known as the Form-B valve. This consists of a disk valve; a stem by which the disk valve is rotated; and a spring for holding the valve on its

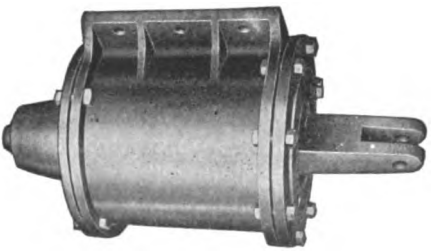

FIG. 485.—Brake-cylinder.

seat. The disk is provided with a cored passage for making the necessary connections between the corresponding parts in the valve body, and is centred by means of a pin in the latter. The guide-pin engages with a hole in the centre of the disk valve and is easily removed from the valve-seat, thus facilitating the re-grinding of both the valve and seat whenever this may be necessary. The Form-B valve can be furnished either with or without the sander valve; it embodies the same

general features as the Form-C valve, and similar handles are used with both types.

Brake-cylinders.

The brake-cylinders supplied with these equipments have been designed with a view of incorporating such features as have been found to be most satisfactory in the past, and which, therefore, have become almost universal standards. The castings for the brake-cylinders, together with the packing leathers, are treated by a special process which render them absolutely air-tight. The cylinders are fitted with tubular piston-rods, which surround the push-rods to which the brake-levers are connected. These push-rods are so arranged as to move within the hollow piston-rods when the brakes are applied by hand. The pressure heads of the cylinders are provided with a forked extension to which the end of one cylinder-lever is attached.

Reservoirs.

Reservoirs are made of a special grade of steel, and are so constructed as to give maximum strength with minimum weight. A one-half-inch drain-cock of substantial construction is furnished with each reservoir; this is fitted with a lever handle. The reservoirs are tapped at one end for the reception of the pipe-connection to the compressor, and at the other end for connection to the main reservoir pipe leading to the motorman's valves. A tapped hole is also provided for the connection to the air-compressor governor. Hangers are supplied for attaching the reservoir to the bottom of the car.

Safety-valves.

To prevent the possibility of excessively high pressure in the reservoir, which, however, could only result from accident to or some abnormal condition of the pressure-controlling apparatus, a safety-valve is connected to the reservoir-pipe line. This valve in construction is similar to the pop safety-valve used in steam practice, and can be readily adjusted by removing the cap on the upper part of the valve and turning the adjusting screw. All standard safety-valves are adjusted to open at 100 lb. per sq. in., this adjustment having been found to best meet the requirements of the straight air-brake system.

FIG. 486. Safety-valve.

Pressure-gauges.

The pressure-gauges supplied are especially adapted for this class of service. These gauges are proportioned in such a manner that they will retain their calibration indefinitely. With straight air-brake equipments single-hand gauges are furnished for connection to the main reservoir line.

Exhaust-mufflers.

To eliminate the noise of the air escaping from the exhaust-pipe of the motorman's valve exhaust-mufflers are provided when desired. These are designed so as not to interfere with the free discharge of the air when the brakes are released.

FIG. 487.—Exhaust-muffler.

CHAPTER XXIX

GASOLENE ELECTRIC LOCOMOTIVES.

PATTON LOCOMOTIVE.

It will be observed that this locomotive is a self-contained one, the locomotive carrying its own generating apparatus, not requiring the aid of a power-house to furnish current. The current is generated on the locomotive by the use of a direct-connected gas-engine and generator (Fig. 488), both mounted on the same bed-plate, forming a self-contained unit, very compact and very efficient. The motors on the axles are the same as those in the other systems, standard locomotive motors. The batteries are the same as those used in a power-house to equalize the load. Fig. 489 shows a cross-section of one form of the locomotive. The centre of the locomotive contains the generating unit, composed of a gasolene-engine and a direct-current dynamo, this unit being of capacity to suit the locomotive. In this case the engine generators are capable of giving out 100 H.P. The batteries are of a capacity of 75 H.P. for five hours. These batteries are carried at each end of the locomotive in tiers. The gasolene to operate the engine is carried in a tank suspended from the roof with proper pipes to the vaporizer of the engine. On the roof are the water-tanks which furnish water to cool off the cylinders. A

muffler is attached to the exhaust of the engine to prevent noise. The motors are geared to the axles in the usual manner. This locomotive is controlled by a series-parallel controller, shown on the front. It would seem at first glance to be a complication of machinery to get the results desired and that it would be more efficient to

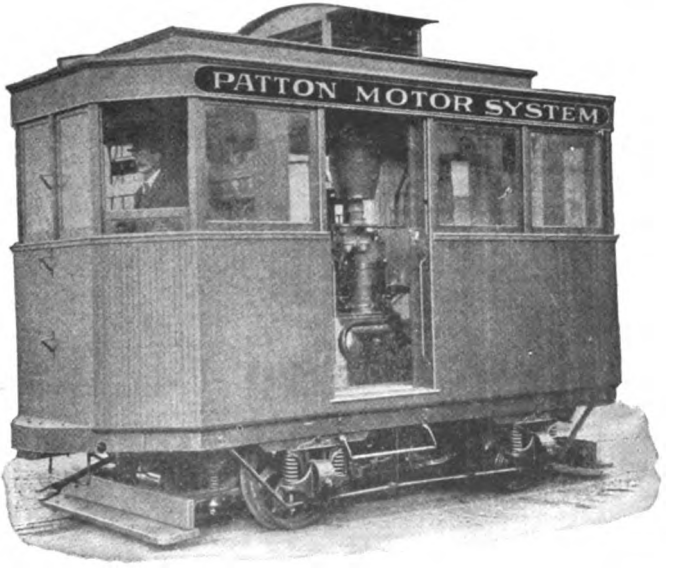

FIG. 488.—Patton Locomotive.

produce the power direct from the gas-engine. But such is not the case in this construction. Economy in operation is the important point sought after. A gas-engine works at the best economy when working at normal load, and an overload will stop it. Then, in starting a train nearly twice the power is demanded over that required to maintain the speed; also, with varying grades

and conditions the power demanded of the engine often runs far below the normal capacity. This system then balances up the load for the engine so that it may have a constant-load factor at all times with the necessary

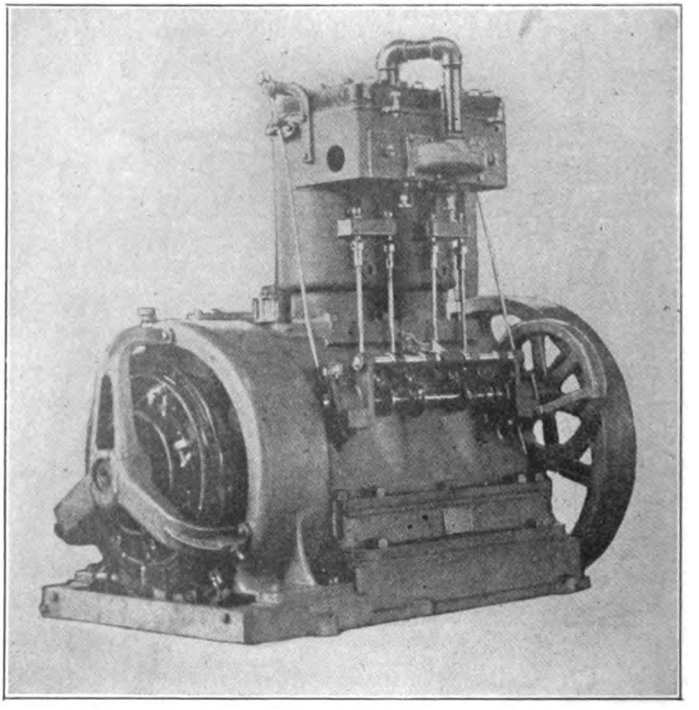

FIG. 489.—Gasolene engine, Patton Locomotive.

flexibility of power. This is obtained by the following method: Assuming that the normal horse-power of the engine is 100, that the normal conditions of power demanded by the car are represented by 200, and that the necessary power required for overcoming train inertia is

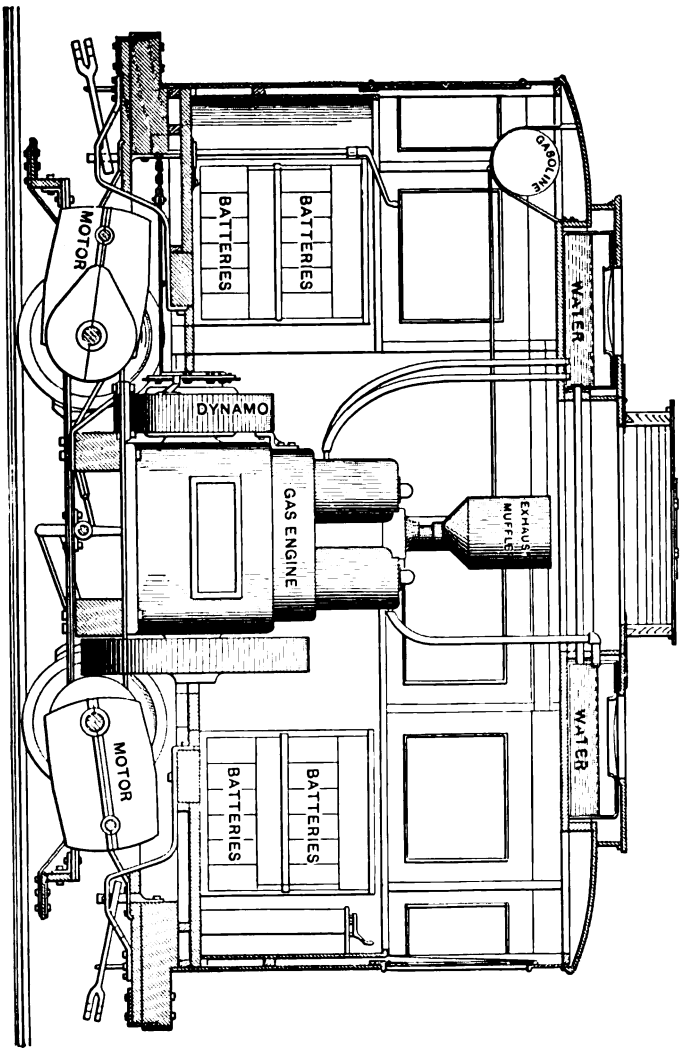
BATTERIES
BATTERIES
MOTOR
DYNAMO
GAS ENGINE
EXHAUST MUFFLER
GASOLINE
WATER
BATTERIES
BATTERIES
MOTOR
WATER

FIG. 490.

400, then the proposition is of a 100-horse-power engine which has an available 400 horse-power for momentarily excessive work demanded of it. This no doubt seems impossible, but the operation is as follows: The engine itself runs the generator, of equal capacity with the engine. This generator supplies current to the propelling motors of the locomotive and also to the storage-batteries, and the system consists in the harmonizing of these batteries with the generator, so that automatically both give and take current according to the power demanded. No mechanical means is used in obtaining this automatic arrangement. The batteries themselves are of sufficient capacity to give a continuous 50 to 100 horse-power for five hours. Assuming that the battery equipment gives 75 horse-power continuously for five hours, it can give an available 300 horse-power for one and one half hours, and can for a few moments give 400 horse-power. This under the supposition that during the times given no current was supplied to the batteries, but that whenever the demand was for less than 100 horse-power all surplus current would be credited to the battery charge. Now going back to the first figures, if 200 H.P. were demanded for the continuous maintenance of momentum, there would be an available $3\frac{3}{4}$ hours' run without any stop. Whenever a stop is made the entire 100 horse-power from the generator is turned into the batteries, the engines having run continuously at normal load. Thus it is shown how a 100-horse-power engine and generator can fulfil the requirements. On down-grades the batteries can be charged by the generator as well as when standing still.

In starting this locomotive the engine is run by the

generator being turned into a motor, drawing its current from the batteries, and then automatically glides into a generator again as the engine takes hold of its work. In a standard railway locomotive of this system of 800 horse-power the motors are four in number, of 200 H.P. each, one on each pair of wheels on the truck. This is a double-header and follows the general outlines that the electric locomotive has assumed. All arrangements are such that it will run in either direction, gas-engines and generators being located in the centre of the cab proper, and controlling arrangements being provided at each end of the cab. The batteries are placed where the panels on each side are shown, so that they are accessible for removal or inspection from the outside of the machine. On each side, also in one end next the cab, tanks are placed to carry gasolene and water for the engine.

THE STRANG INDEPENDENT ELECTRIC CAR OR LOCOMOTIVE.

A gasolene electric railroad-car, furnishing its own power and particularly adapted for interurban service on steam-railroad tracks. It comprises a gasolene engine direct-connected to a dynamo supplying current to the motors on the trucks, while a storage-battery dampens the fluctuations in load. The engine is able to run at a practically constant normal speed, at which its efficiency is a maximum, and when the car is running on a level track the motors use the full supply. When the car is coasting the storage-batteries are charging, and on an up-grade or during starting and accelerating the storage-batteries supplement the power of the engine. This combination, considered merely as a clutch-and-change gear,

is believed to be superior to any mechanical appliance, for the electric motors afford a variety of speeds and an elasticity that would not be possible with direct drive from a gasolene engine.

The car illustrated in Fig. 491 was built by the J. G. Brill Company of Philadelphia, from plans and specifications furnished by the Strang Electric Railway Car Company, and is mounted on high-speed trucks of the Brill No. 27-E type, having rolled steel wheels. One of these cars has made a run from New York City to San Francisco, by way of the West Shore, New York Central, Michigan Southern, Rock Island, St. Louis & San Francisco, and Southern Pacific railroads. The cars have smoking and passenger compartments, with a total seating capacity of 42, and are used by the Missouri & Kansas Interurban Railway Company over the Santa Fé trail from Kansas City, Mo., to Olathe and southwestern Kansas.

The principal advantage of the Strang system is that it requires an engine only large enough to develop the average power used. The engine is of special construction, and includes a number of governing devices which are unique in design and operation. The general scheme of the system is shown diagrammatically in Fig. 492 and includes a gasolene engine, *E*, with a direct-connected generator, *D*, electric transmission and controller, *C*, direct electric connection between the generator and the truck motors, *M* and *M*, and a storage-battery, *B*.

The engine is of the four-cycle type, and has six 8×10-inch cylinders. To secure a short crank-shaft and minimize vibration the cylinders, as shown in Fig. 493, are partially opposed, three on each side, and the sets are at an angle of 90 degrees with each other. This

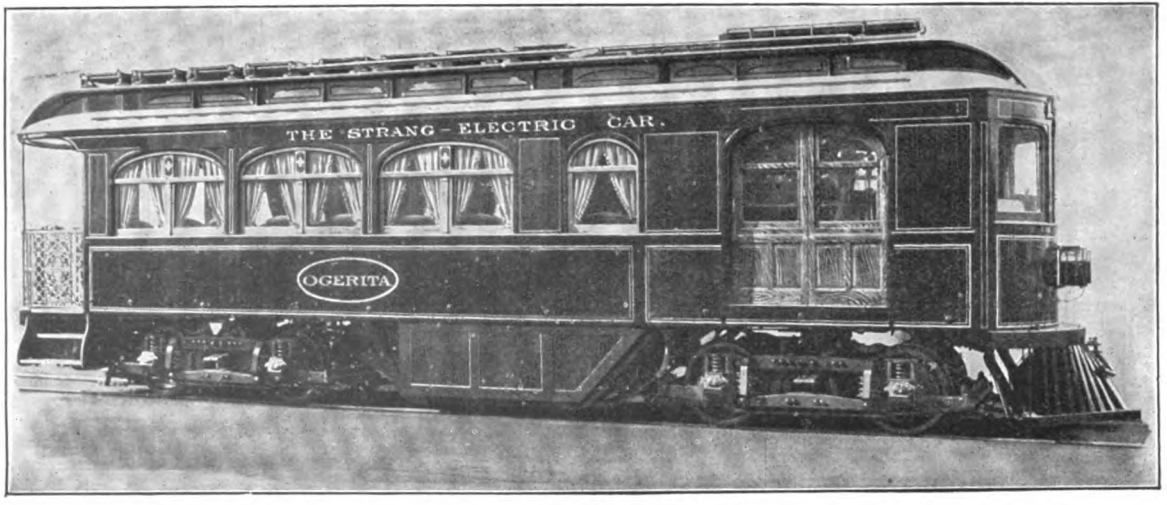

FIG. 491.—The Strang Electric Railway Car or Locomotive.

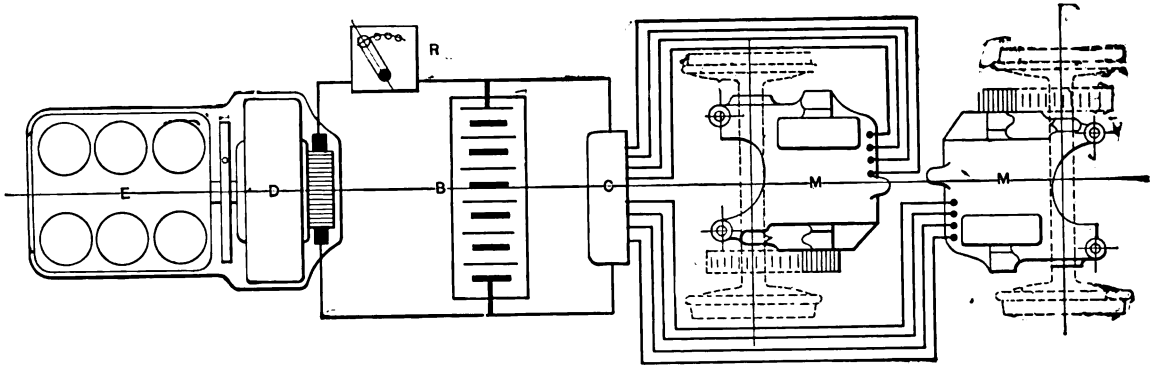

FIG. 492.—Diagram Plan of the Strang Power-system.

construction also has the advantage of making the parts readily accessible. The bearings and wearing surfaces in general are much larger than customary, bu the weight of the entire engine is reduced by using aluminum for covering parts where there is no strain. The engine frame is of cast steel and is securely bolted to a rectangular base of the same material. The vaporizer is arranged to work economically at all loads. Kerosene, alcohol, or crude oil may be used instead of gasolene with a slight change of adjustment of the vaporizer. The ignition is by jump-spark, coils of special design being used, one for each cylinder, and all operating from one interrupter. The commutator is driven from the end of the cam-shaft and is outside the casing at the rear of the engine. Lubricating oil is contained in a reservoir beside the engine and is pumped to the different bearings, finally returning to a filter over the reservoir. A centrifugal pump belted to the fly-wheel draws water from a tank in the vestibule at the centre of the car and forces it through the cylinder-jackets and to radiating pipes upon the roof. In cold weather the passenger compartment is heated by passing this water through interior radiators. The gasolene is stored in a tank underneath the car floor, and is pumped to an overflow-cup at the side of the vaporizer and the excess is returned by another pipe to the tank. The cells of the storage-battery are placed on a cradle underneath the centre of the car. By using a voltage of 250 instead of 500, the number of cells is reduced and more reliable insulation is secured.

The electrical equipment consists of a 50-kw. 250-volt direct-current generator, running at 400 revolutions per minute, directly coupled to the gasolene engine; two 50

horse-power series-wound motors of regular street-railroad type, two controllers, and a storage-battery of 112 cells having 200 ampere-hours capacity. By the series-parallel system of control effective speed changing and reversing is secured without additional gears, clutches, or other mechanical appliances, and with the battery the full

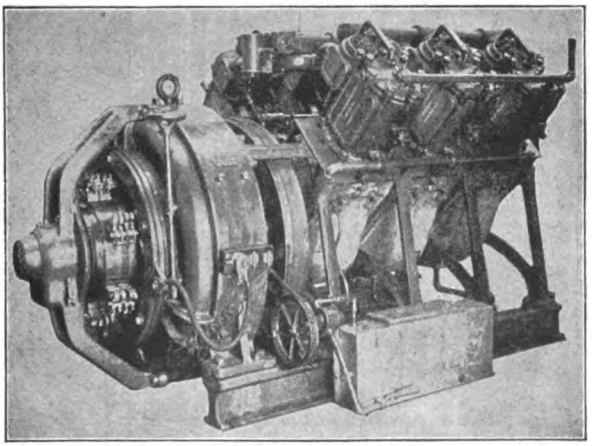

FIG. 493.—The Six-cylinder Gasolene Engine and Direct-connected Generator.

benefit of flexibility, reliability, and economy is gained in this combination. The battery is of comparatively small size, as it is rarely called upon to furnish current for more than a few minutes at a time. Ordinary use improves and is necessary to keep a battery in good condition, and it is entirely practicable to build a battery of small capacity with long life.

The electric transmission being elastic, there is always a tendency to adjust the speed of the car to that which

is most suitable and economical for the primary power equipment. The engine is provided with automatic governing devices, dependent entirely upon the condition of the batteries and the consumption of current. This arrangement has nothing to do with the speed of the engine or the motors, but is simply a safeguard

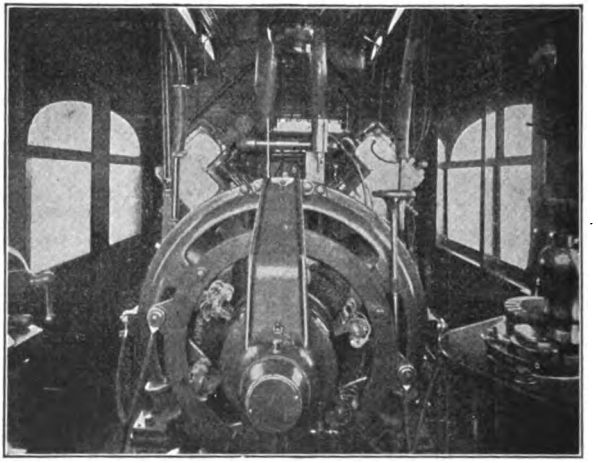

FIG. 494.—The Engine-room as Seen through the Front Window.

against overcharging the batteries and is entirely automatic, and solely for the purpose of economizing fuel and saving the battery when the car is running light or standing still.

The switchboard is placed against the left side of the engine compartment within easy reach of the operator, as may be seen in Fig. 494. It includes voltmeter, ammeter, starting rheostat, and spark-control. The platform at the rear of the car is equipped with a controller and a combination voltmeter and ammeter.

The maximum speed of the car which can be maintained is 50 miles per hour. The average gasolene consumption is 0.45 gallon per car-mile. One hundred gallons of gasolene are carried, which gives a mileage radius of 225 miles.

INDEX.

A

PAGE

Accidents to boiler and attachments. 11–13
Air-brakes, New York. 488
, Westinghouse. 474
on electric locomotives. 680, 875
, General Electric straight air-brake system. 886
, Westinghouse electric motor-driven air-compressor. 875
Air-compressors. 681, 888
, Type MC governor for. 890
Air-holes. 16
Air-pump, Westinghouse. 420
Ammeter. 624
Ampère. 679
Apparatus, train-signalling. 477
Arm, lifting. 67
, reversing. 68
Armatures. 603
, drum. 675
, ring. 604
Arresters, lightning. 629
Automatic pressure reducing-valve. 476

B

Bar, four-bar type of guide. 26
Bars, crown. 1
, equalizing. 88
, guide. 24, 25
, wear of guide. 25

PAGE

Block, break-joint. 23
, link. 68
Blowout, magnetic. 631
Boiler, Belpaire. 1
, locomotive, Belpaire. 572
, Player. 559
, Prairie type. 572
, Vanderbilt oil-burning. 557
coal-burning. 580
, wagon-top. 566
, Webb. 208
, Wootten. 566
, modified. 570
, wagon-top. 2
, water line in locomotive. 3, 4
Bolt, binder. 40
, wedge. 40, 41
Boxes, driving. 40
Brakes, Carpenter system. 310
, high-speed. 472
Brasses, crank-pin. 48
, main-rod. 48
Breaker, automatic circuit. 625
Breaking down. 30–34
Bursting, dry pipe. 13

C

Cap, pedestal. 37
Car, Strang independent electric. 909
Cards, indicator. 98
Casting-bed. 18
Chock. 43
Circuit-breaker, automatic. 625
Clamp, valve-stem. 31
Clearance, inside. 63
Closed-circuit winding. 606
Cocks, gauge. 4
Coils, resistance. 618
Compressor, air, electric-driven. 681, 888

PAGE
Condensation, cylinder. 95, 96
Controller, series parallel. 635, 768
combinations. 683
Core, armature. 604
Crank-axle, Worsdell. 291
Current, alternating. 668
, prime movers used for generating. 708
, Foucault. 595
Curve, expansion. 101
Cylinder, Baldwin balanced compound steam 139
cross compound steam. 120
tandem compound steam. 127
, brake. 902
, Brooks single expansion steam. 195
tandem compound steam. 200
, diagram of Baldwin balanced steam. 136
, four-cylinder compound steam. 139
, locomotive steam. 18

D

Data of Heilmann locomotive. 698
Deflector, Tenbrink. 290
Designing a motor. 678
Diagram, controlling. 706
of wiring Heilmann locomotive. 666
Diaphragm. 6
down. 15
Disconnecting. 30–34
Dome. 2
Drum armature. 601

E

Eccentric. 64
, angular advance of 65, 66
, centre of. 65
, slipped. 77, 78
Electric control systems of locomotives. 817
, electro-pneumatic multiple-unit. 847

PAGE
Electric control systems of locomotives, General Electric Type M. . 825
, Westinghouse hand-control. 836
, Westinghouse multiple. . . . 819
Electric locomotives. See under Locomotives.
End stub. 49
Engine, keeping up air. 53
, lame. 83
, rods for eight-wheel passenger 49
, six-wheel connected. 50
, Willians triple expansion. 684

F

Fields, electric-motor. 593
Fire-box. 6
burning oil, Holden. 554
, Player. 559
, Vanderbilt. 557
, fire knocked out of. 12
, modern. 566
, Vanderbilt. 575
, Wootten. 566
Foaming. 4
Force, adhesive. 60
, counter-electro-motive. 612
, tractive. 60
Frames, consolidation engine. 36, 37
, locomotive. 35
, types of. 35
Fuel, chemical composition of liquid. 553
, injector for burning liquid. 554
, liquid. 550
, report on liquid 564
Fuse, combined switch and. 897

G

Gauge, diaphragm. 394
, heavy indicating. 397
, light " 397
, pressure. 903

PAGE
Gauge, steam. . . . 394
, tube. . . . 394
Gear, Allan. . . . 319
, Heusinger von Waldegg. . . . 320
, Joy. . . . 320, 325
, Lindner 285
, Walschaert. . . . 286, 544
Generating station, three-phase. . . . 708
unit, three-phase turbine. . . . 709
Generator, single-phase. . . . 744
, three-phase, Bullock. . . . 713
Gib, broken. . . . 33, 34
Glasses, automatic valve in. . . . 6
, broken. . . . 10
, water-gauge. . . . 5
Governor, duplex. . . . 473
, New York air-pump. . . . 422
, Westinghouse air-pump. . . . 443
Gramme ring. . . . 457
Groove, breaking. . . . 19

H

Hanger, spring. . . . 38
Head, cross. . . . 24, 25
, piston. . . . 22

I

Indicator, the Crosby. . . . 99
, twenty years with the. . . . 100
Injector, Metropolitan double-tube. . . . 387
, Reagan. . . . 377
, Rue. . . . 386
, capacity of. . . . 386
, Sellers restarting. . . . 382
, capacity of. . . . 384
Injectors. . . . 371
, capacity of. . . . 373
, failure of. . . . 373

PAGE
Injectors, lifting. 374
, non-lifting and restarting. 374
, operation of. 371
, parts of. 372
, simple illustration of. 373
Intercepting-valve for compound engines. 365

J

Jaws, pedestal. 36
Joints, ball. 15
, knuckle. 51

K

Kilowatt. 680

L

Lap, increase. 63
, inside. 63
, outside. 63
, valve without. 64
Lead, increase of. 72
Line, atmospheric. 100
, compression. 101
, exhaust and back pressure. 101
, steam. 100
Link. 66, 67
, radius of. 67
Links, blocking up. 78, 79
Locomotion, alternating-current. 668
Locomotive, Baldwin balanced. 130
cross-compound. 120
tandem compound. 127
, Brooks heavy freight. 194
piston valve. 195
tandem compound. 180
, compound. 87
, balanced, designs of. . . . 258, 261, 268, 271–275
, Baldwin. 102–113
, accidents with. 113–116

PAGE

Locomotive, compound, Brooks. 178
,, calculating power of. 94
, Du Bousquet de Glehn. 334
, English. 337–341
, foreign-built. 283, 334
, four-cylinder articulated. 227, 283
, Mallet. 283
, Hungarian. 312
, Johnstone. 277
, dimensions of. 282
, indicator diagrams of. 279–281
, recent American. 227
, Saxon. 308
, three-cylinder. 322
, two-cylinder. 328
, Von Borries system. 315, 328
, Wolff system. 297
, detail drawing of Baldwin tandem compound. 127
cylinders and saddle, Baldwin four-cylinder balanced compound. 139
, electric (France). 645
, Baldwin and Westinghouse. 704
, B. & O. R. R. 646
, Heilmann. 661
, generator. 664
, high-speed, three-phase system. 780
, New York Central. 792
, N. Y., N. H. & H. R.R. 851
, on Valtellina lines, Italy. 772
, operating on a three-wire system. 808
, operation of. 712
, single-phase. 753, 755
, Sprague. 657
, switching 699
, express, Pennsylvania R.R. 357
, general arrangement of cylinders, saddle, and section through steam-chest, Baldwin compound. 119
, generating current for electric. 585
, improvement in Baldwin. 116
, modern French. 361

PAGE
Locomotive, No. 20,000 130
, passenger, compound fast 289
, four-cylinder balanced compound 253–266
, advantages of 266
, application 267
, Atlantic type ... 261, 275
, Cole 255, 257
, Pacific type 268, 274
, Prairie type 273, 573
, ten-wheel type 271
, twelve-wheel type .. 272
, N. Y., N. H. & H. R.R. 165
, Pittsburg 172
, accidents with 175
, Reading single-driver 353
, regulation 667
, Rhode Island, accidents with 170
, Richmond compound 215
, breaking down of 223
, Schenectady 155
, accidents with 162
cross-compound 232
, tandem 186
accidents with 192
compound 243
, two-cylinder 178
, Vanderbilt oil-burning 557
coal-burning 580
, Webb 208, 322
Locomotives, alternating-current electric 712–816
, armature 715, 748
, auto-transformer 736, 750
, exciter set 717
, General Electric single-phase transmission system 760–763
, induction regulators 733
, line construction 738
, motors 746
, oil-switches 725

PAGE

Locomotives, alternating-current electric, operation. 732
, regulation. 730, 750
, rotary transformer. 727
, single-phase alternating system. 744
, static transformers. 718
, direct-current electric. 585–668
, as applied to steam railroads. . . 803
, elaborate test of. 87
, electric control systems of. 817–850
, gasolene electric. 904
, Patton. 904
, Strang. 909
, simple illustration of. 90–94
Lubricator, air-pump. 398
, Detroit. 399
, index to. 403

M

Motion, Baldwin balanced compound valve. 146
, breaking down of valve. 79
, direct valve. 533
, four-compound cylinder indirect valve. 541
, heavy freight valve. 542
, indirect valve. 357
, link motion. 64
, Allen. 310
, locomotive valve. 532
, parts of link. 65
, reversing. 71, 72
, setting valves for indirect. 535
, valve. 363
, Walschaert. 230, 363
Motor, General Electric compensated. 764
, multipolar. 596
, reversing of. 615
, spring-mounted steel. 643
, Westinghouse. 642

PAGE
Motors, different kinds of electric. 640
Movers, prime, used for generating alternating current. 708
Mufflers, exhaust. 903

N

Netting. 8
Nozzle, exhaust. 8, 14
Nut, jamb. 41

O

Oil cellars. 41
Oil-cups. 52
Oiler, Consolin. 306
Operation of high-speed brakes. 475

P

Packing, piston-head. 22–24
Passage, steam and exhaust. 18
Pin, crank, on dead-centre. 81, 82
, rocker-arm. 68
, saddle. 67
, worn saddle. 84
Pipe, dry. 14
Pipes, exhaust steam. 14
, steam. 14
Plate, balance. 21
, follower. 24
Polarity, change of. 590
Port, Allen or Trick. 310
, exhaust. 20
Ports, steam. 18–20
Pressure, terminal. 101
Priming. 5
, effect of. 5
Pump, air, improved. 451

Q

Quadrant, marking of. 85

PAGE

R

Regulation. . . . 667
Regulator, controller and speed. . . . 634
, Mason. . . . 482
Reservoirs. . . . 902
Rheostat. . . . 618
, starting. . . . 620
Rigging, spring. . . . 37, 38
, breaking down. . . . 42, 43
Rod, eccentric. . . . 66
, main. . . . 48
, broken. . . . 60
Rods, breaking of. . . . 58
side. . . . 49
, for consolidation engine. . . . 49, 51

S

Saddle, link. . . . 67
, spring. . . . 37
Sand. . . . 13
Sander, detail Leach "D". . . . 525
, Leach "A". . . . 526
"D". . . . 522
"D" triple. . . . 523
, She. . . . 528–531
Sanding apparatus. . . . 520
Seats, valve. . . . 18
Shaft, tumbling. . . . 67, 68
Shoes, driving-box. . . . 45
Signal system, operation of. . . . 48
Splice-frame. . . . 36
Spring, equalizing. . . . 76
Springs, driving. . . . 37
Steam, dry. . . . 5
, temperature of. . . . 19
Steam-chest. . . . 18
Steam-turbine. . . . 709–711
Steaming, poor. . . . 14

PAGE
Straps, eccentric. . . . 66
, rod. . . . 51
Studs. . . . 14
Superheater, Cole. . . . 344
, Schmidt. . . . 348
Superheaters as applied to locomotives. . . . 344
Suspension, method of. . . . 644
Switch and fuse. . . . 897
, commutating. . . . 766
, oil. . . . 767
Switching locomotives, electric. . . . 699

T

Tables showing travel and point of cut-off of valves. . . . 85, 86
Tire, broken. . . . 46
Transformer, step-down. . . . 765
Trolley, pantagraph. . . . 752, 753
, pneumatic bow. . . . 751

U

Units, electrical. . . . 679

V

Valve, Baldwin balanced compound piston. . . . 142
starting. . . . 120
two-cylinder intercepting and starting. . . . 226
vacuum-preventing. . . . 120
, brake, engineer's. . . . 498, 898
, Brooks piston. . . . 196
tandem compound piston. . . . 200
, by-pass. . . . 248
, conductor's car. . . . 481
, D. . . . 21
, difference in travel of. . . . 69
, discharge, equalizing, Westinghouse. . . . 416
, duplex feed. . . . 474
, equalizing, improved. . . . 458
, exhaust cavity of. . . . 21

PAGE
Valve, high-speed brake reducing. 476
, lap of. 63
, lead of steam. 64
, Lindner admission. 310
motion. 63
, names of parts of car discharge. 482
, high-speed brake reducing. 478
train signal. 480
, point of cut-off. 86
, reducing. 478
, release or relief. 32
, retaining, Westinghouse. 455
, balanced. 21
, Richardson. 391
, safety. 390
, Kinney. 393
, section through Baldwin compound locomotive steam. 119
, setting. 81
, signal. 480
, single, for high- and low-pressure cylinders 270
, slide. 63
, throttle. 2, 3
, travel of 65, 85, 86
, triple. 501
, quick-action. 425
, Westinghouse, plain. 432
, quick-action. 416
Valve-gear. See Gear.
Volt. 679
Voltmeter. 621
attaching. 621, 623

W

Water, changing. 4, 5
, impurities. 4
, raising of. 3
Watt. 680
Wedge. 40
Wedges, setting up. 42

PAGE
Wheel, blind. 47
, broken driving. 47
Winding, armature. 605
, field-magnet. 598
, shunt. 599
Wiring, complete, diagram of. 771

Y

Yoke, field-magnet. 594
, valve. 23
, broken. 32
, finding a. 32